Anritsu

SERVICE MANUAL

47-285376P1
Book 2 of 2

ERROR RATE MEASURING EQUIPMENT

ME522A

MP MASTER
MA35815

Anritsu

SERVICE MANUAL

ERROR RATE MEASURING EQUIPMENT

ME522A

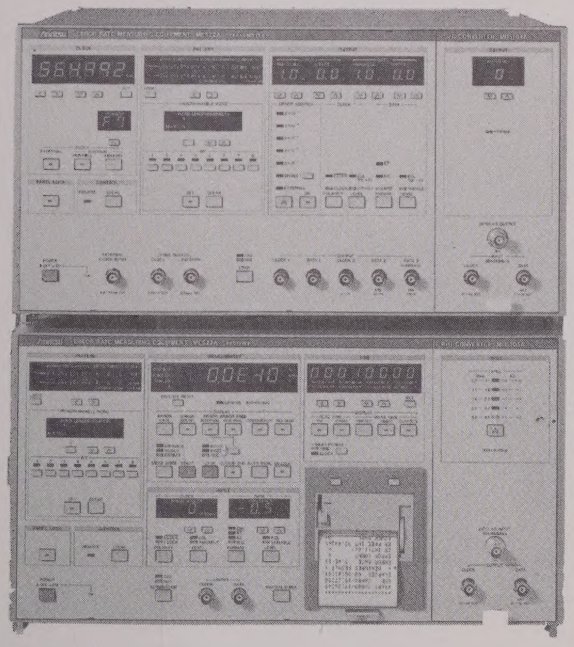

1988.11 x 100 NI-2(Y)
Printed in Japan

CERTIFICATION

ANRITSU CORPORATION certifies that this instrument has been thoroughly tested and inspected, and found to meet published specifications prior to shipping.
Anritsu further certifies that its calibration measurements are based on the Japanese Electrotechnical Laboratory and Radio Research Laboratory standards.

WARRANTY

All parts of this product are warranted by Anritsu Corporation of Japan against defects in material or workmanship for a period of one year from the date of delivery. In the event of a defect occurring during the warranty period, Anritsu Corporation will repair or replace this product within a reasonable period of time after notification, free-of-charge, provided that: it is returned to Anritsu; has not been misused; has not been damaged by an act of God; and that the user has followed the instructions in the operation manual.

Any unauthorized modification, repair, or attempt to repair, will render this warranty void.

This warranty is effective only for the original purchaser of this product and is not transferable if it is resold.

ALL OTHER EXPRESSED WARRANTIES ARE DISCLAIMED AND ALL IMPLIED WARRANTIES FOR THIS PRODUCT, INCLUDING THE WARRANTIES OF MERCHANTABILITY AND FITNESS FOR A PARTICULAR PURPOSE, ARE LIMITED IN DURATION TO A PERIOD OF ONE YEAR FROM THE DATE OF DELIVERY. IN NO EVENT SHALL ANRITSU CORPORATION BE LIABLE TO THE CUSTOMER FOR ANY DAMAGES, INCLUDING LOST PROFITS, OR OTHER INCIDENTAL OR CONSEQUENTIAL DAMAGES, ARISING OUT OF THE USE OR INABILITY TO USE THIS PRODUCT.

All requests for repair or replacement under this warranty must be made as soon as possible after the defect has been noticed and must be directed to Anritsu Corporation or its representative in your area.

**Copyright (c) 1986 by ANRITSU CORP. Printed in Japan.
All rights reserved. No part of this manual may be reproduced in any form without written permission of ANRITSU CORP.**

Notes:

1. This instrument is operable on nominal voltages of 100 to 127 Vac or 200 to 250 Vac by changing the connections on the power transformer taps. (See paragraph 3.2.5.)

   The voltage and current ratings are indicated on the rear panel when the instrument is shipped from the factory.

   To operate on another voltage, change the connections to the power supply transformer; the plate on the rear panel indicating the voltage and current ratings should be changed to the appropriate one. Order the plate from ANRITSU CORP. if needed.

2. In this manual, the power supply voltage and current ratings are represented by **Vac and ***A, respectively.

3. The relationship between power supply voltage and current rating is shown below.

**Vac	***A (Transmitter, Receiver)
100 to 127 V	6.3 A
200 to 250 V	3.15 A

ERRATA

ITEM	DESCRIPTION	
	ERROR	CORRECT
PARTS LIST		
	Battery, (ER-6)	Battery with resistor, (S49Z10069A)

TABLE OF CONTENTS

		Page
SECTION 1	GENERAL	1-1
SECTION 2	MECHANICAL CONFIGURATION	
2.1	Introduction	2-1
2.2	Disassembly	2-1
2.2.1	Separation of transmitter and receiver ..	2-1
2.2.2	Cabinet disassembly	2-3
2.2.3	Transmitter disassembly	2-5
2.2.4	Receiver disassembly	2-15
2.3	Exposed Views	2-21
SECTION 3	TROUBLESHOOTING AND ADJUSTMENTS	
3.1	Introduction	3-1
3.2	Checking and Replacing Parts, and Changing AC Power Supply Rating	3-2
3.2.1	Explanation of identification markings on the PC board	3-2
3.2.2	Notes on Soldering	3-3
3.2.3	Semiconductor markings	3-4
3.2.4	Transistor check	3-6
3.2.5	Ac line power supply changes	3-7
3.3	Equipment Required for Troubleshooting and Adjustment	3-9
3.4	Circuit Reference	3-11
3.5	Transmitter Troubleshooting and Adjustment	3-14

TABLE OF CONTENTS

		Page
3.5.1	Circuit Description	3-14
3.5.2	T-Z6 POWER SUPPLY PC board 24	3-23
3.5.3	T-Z1 Synthesizer section 2 (3 to 19)	3-37
3.5.4	T-Z2 PATTERN GENERATOR-I PC board 20	3-111
3.5.5	T-Z3 PATTERN GENERATOR-II PC board 21	3-131
3.5.6	T-Z4 OUTPUT PC board 22	3-149
3.5.7	T-Z5 CONTROL PC board 23	3-181
3.5.8	T-Z7 DISPLAY 25 , T-Z8 50 Ω/75 Ω TRANSDUCER 26 , T-Z9 MOTHERBOARD 27 , T-Z13 GP-IB 28 , T-Z14 RS-232C 29 , and EXTENDER BOARD PC boards	3-193
3.6	Receiver Troubleshooting and Adjustment	3-215
3.6.1	Circuit description	3-215
3.6.2	R-Z7 POWER SUPPLY PC board 35	3-221
3.6.3	R-Z1 INPUT 31 , R-Z9 50 Ω/75 Ω TRANSDUCER 37 PC boards	3-235
3.6.4	R-Z4 ERROR DETECTOR 32 , R-Z5 COUNTER 33 PC boards	3-275
3.6.5	R-Z6 CONTROL PC board 34	3-311

TABLE OF CONTENTS

Page

3.6.6 R-Z8 DISPLAY 36,
R-Z10 MOTHERBOARD 38,
R-Z11 SWITCH 39,
R-Z12 PRINTER UNIT 40,
PRINTER INTERFACE 41,
PRINTER CONTROL 42,
and EXTENDER BOARD PC boards 3-325

SECTION 4 REPLACEABLE PARTS

4.1 Introduction 4-1

4.2 Ordering Information 4-1

4.3 Circuit References and Abbreviations used in the Parts List 4-2

4.4 Capacitance/Resistance Reading 4-4

4.5 Replaceable Parts List 4-6

SECTION 1

GENERAL

This is the Service Manual for the ME522A ERROR RATE MEASURING EQUIPMENT. It covers the following information:

SECTION 2 MECHANICAL CONFIGURATION:

Describes how the various printed circuit boards (PC boards) are laid out.

SECTION 3 TROUBLESHOOTING AND ADJUSTMENT:

Describes how to troubleshoot the equipment. Circuit diagrams for the ME522A are given in this section.

SECTION 4 REPLACEABLE PARTS:

Explains how to order replacement parts on the parts lists.

For specifications, operating instructions, performance check, and a detailed panel control description of the ME522A, refer to the separate operation manual.

SECTION 2

MECHANICAL CONFIGURATION

2.1 Introduction

This section explains methods of disassembling the ME522A.

2.2 Disassembly

2.2.1 Separation of transmitter and receiver

As shown in Fig. 2-1 below, the receiver and the transmitter are locked together by 4 legs.

Fig. 2-1 Connection between Transmitter and Receiver

As shown in the detailed drawing of Fig. 2-2, the transmitter and the receiver are separated by lifting the locks.

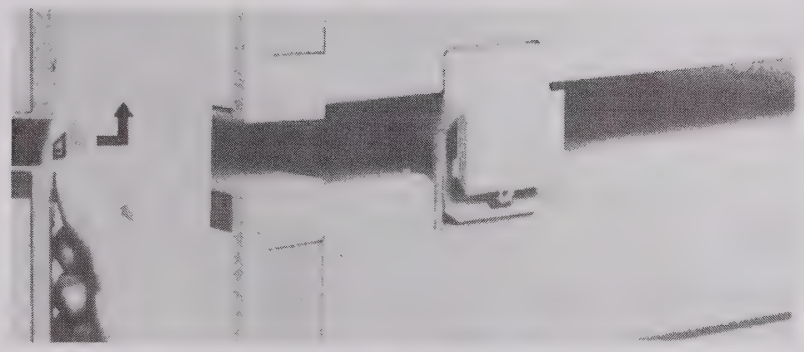

Fig. 2-2 Detailed View of Locking Leg

2.2.2 Cabinet disassembly

No.	PART No.	DESCRIPTION	REMARK	Q'TY
(1)	32B7663	Frame, Front	1MW•5U	1
(2)	32B7667	Channel, Rear	5U	2
(3)	33B20662	Protector		4
(4)		NOT ASSIGNED		
(5)	32B7670	Channel, Top	450D	2
(6)	32B7671	Channel, Bottom	450D	2
(7)	322B7672	Standard Foot		4
(8)	34B73660D	Tape, Trim	5U	2
(9)	349B73661	Handle, Side	450D	2
(10)	33B22452	Cover, Top		1
(11)	43B33503	Cover, Bottom		1
(12)	33B22474	Cover, Side		2
(13)	4BPS8S3	Screw		2
(14)	4BPS8S3	Screw		2
(15)	5FPS12S7	Screw		4
(16)	5FPS10S7	Screw		8
(17)	4NPS20S7	Screw		8
(18)	4SW-SU	Spring Washer		8
(19)	4WBS-B3	Plain Washer		12
(20)	3HRPS10S3	Screw		8

(1) Removing the top cover (10)

Remove the two screws (13). Then, remove the top cover (10) by lifting the rear in the direction indicated by the * arrow.

(2) Removing the bottom cover (11)

Remove the two screws (14). Then, remove the bottom cover (11) from the rear as indicated by the * arrow.

(3) Removing the side cover (12)

Open the handle cover (9) in the direction indicated by the * arrow and remove the two screws (15). Then, remove the four screws (20) and remove the side cover (12).

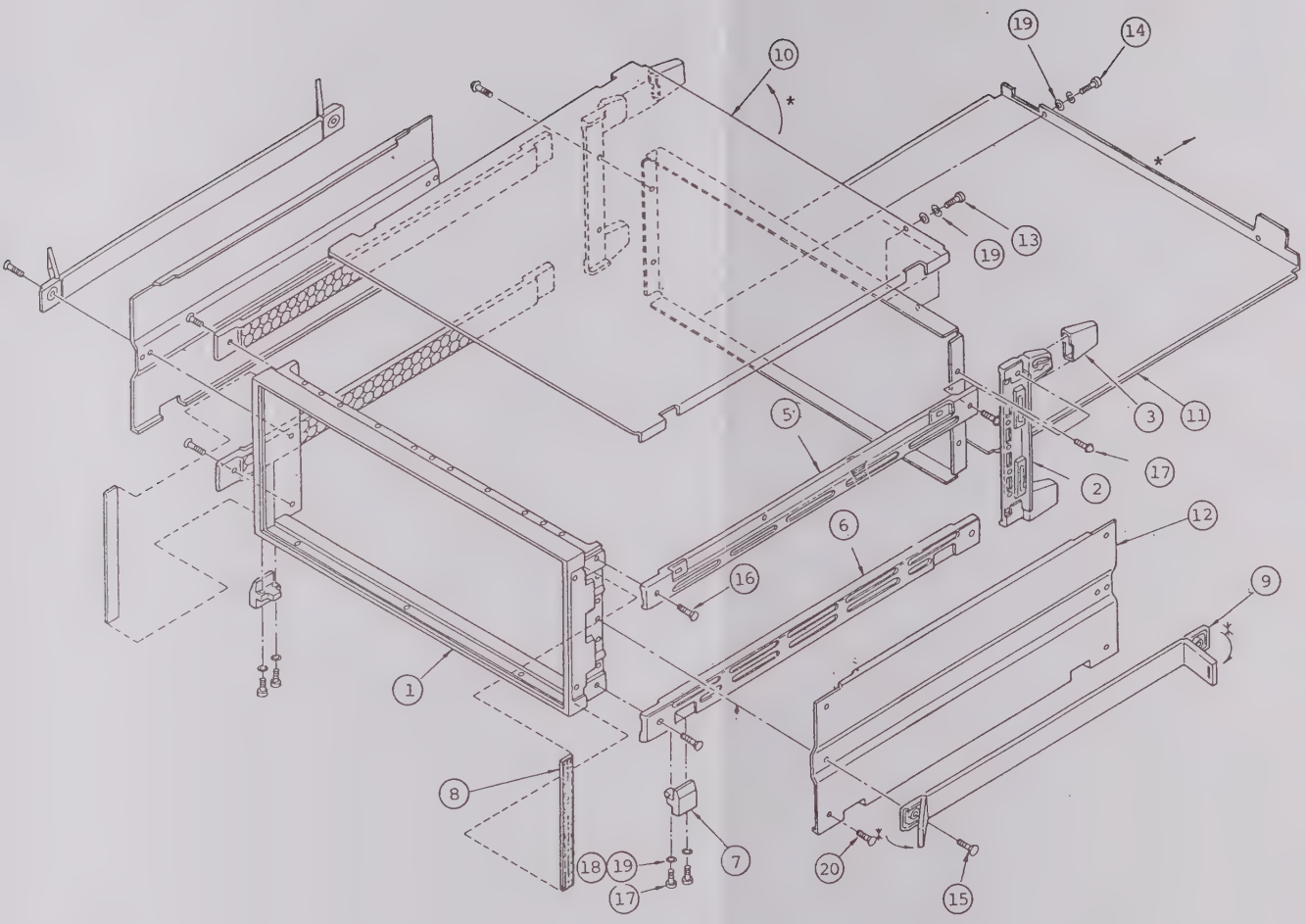

Fig. 2-3 Cabinet Disassembly

2.2.3 Transmitter disassembly

No.	PART No.	DESCRIPTION	REMARK	Q'TY
(1)	42B12566	Front panel		1
(2)	422B12462	Sub panel		1
(3)	442B84956	Bracket		1
(4)	432B33499	Plate		2
(5)	43B33501	Board clamp		1
(6)	44B43444	Special washer		8
(7)	3FPS6S7	Screw		4
(8)	3FPS8S7	Screw		8
(9)	3FPS10B3	Screw		5
(10)	3FPS8B3	Screw		2
(11)	3NPS6B3+SW	Screw		9
(12)	3NPS8B3+SW	Screw		1
(13)	3NPS10B3+SW	Screw		2
(14)	3NPS10B3+SW+WB	Screw		3
(15)	3NPS14S7+SW	Screw		3
(16)	3NPS10S7+SW+WB	Screw		4

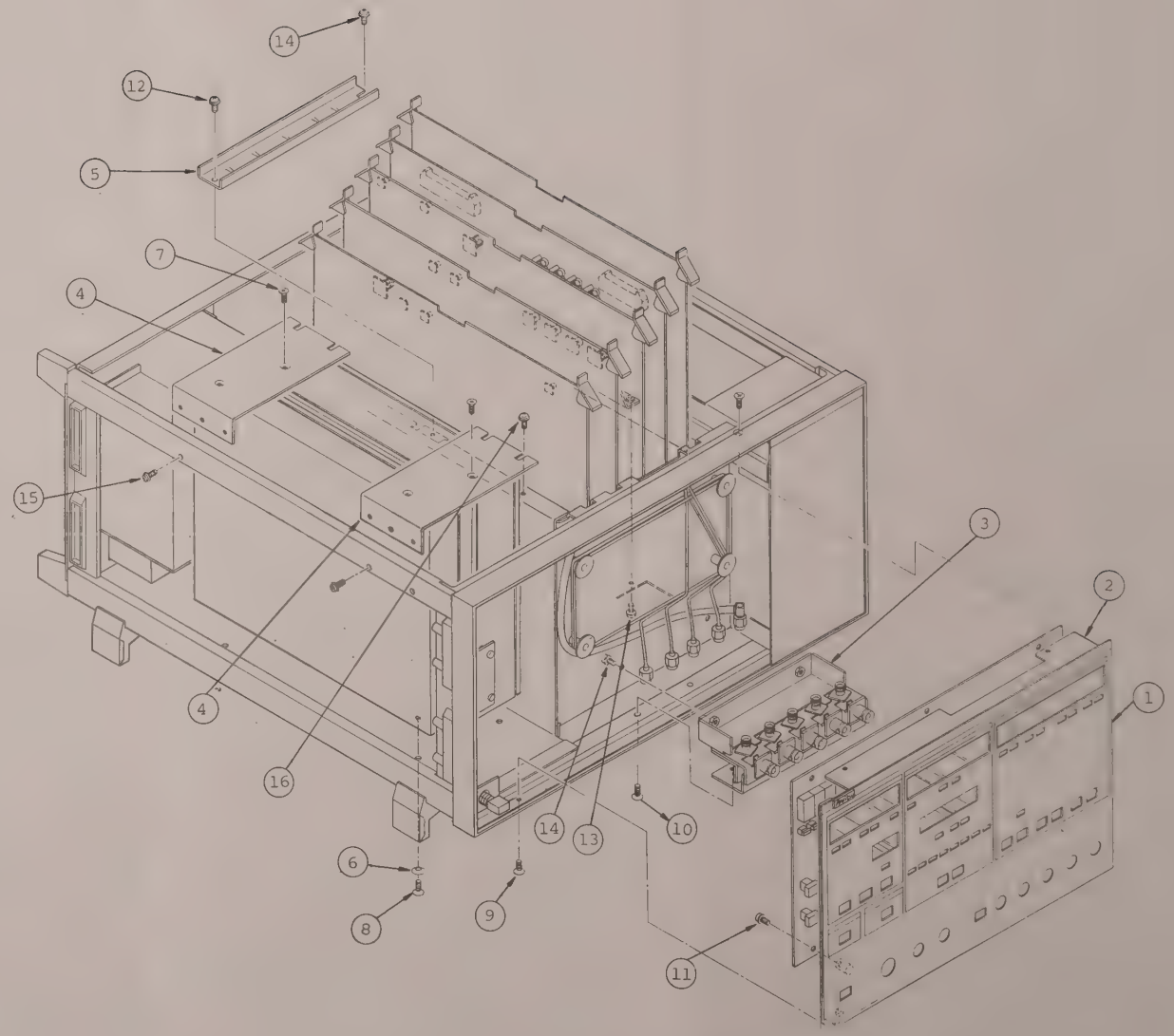

Fig. 2-4 Transmitter Disassembly (Front Panel)

No.	PART No.	DESCRIPTION	REMARK	Q'TY
1	422B12463	Rear panel		1
2	44B84415	Plate		1
3	34B73670	Cord holder		4
4	3FPS8B3	Screw		3
5	3NPS8B3+SW	Screw		2
6	3BPS8S3+WBS	Screw		7
7	3NPS8S7+SW	Screw		2
8	4NPS10S7+SW	Screw		4
9	4NPS12S7+SW	Screw		4

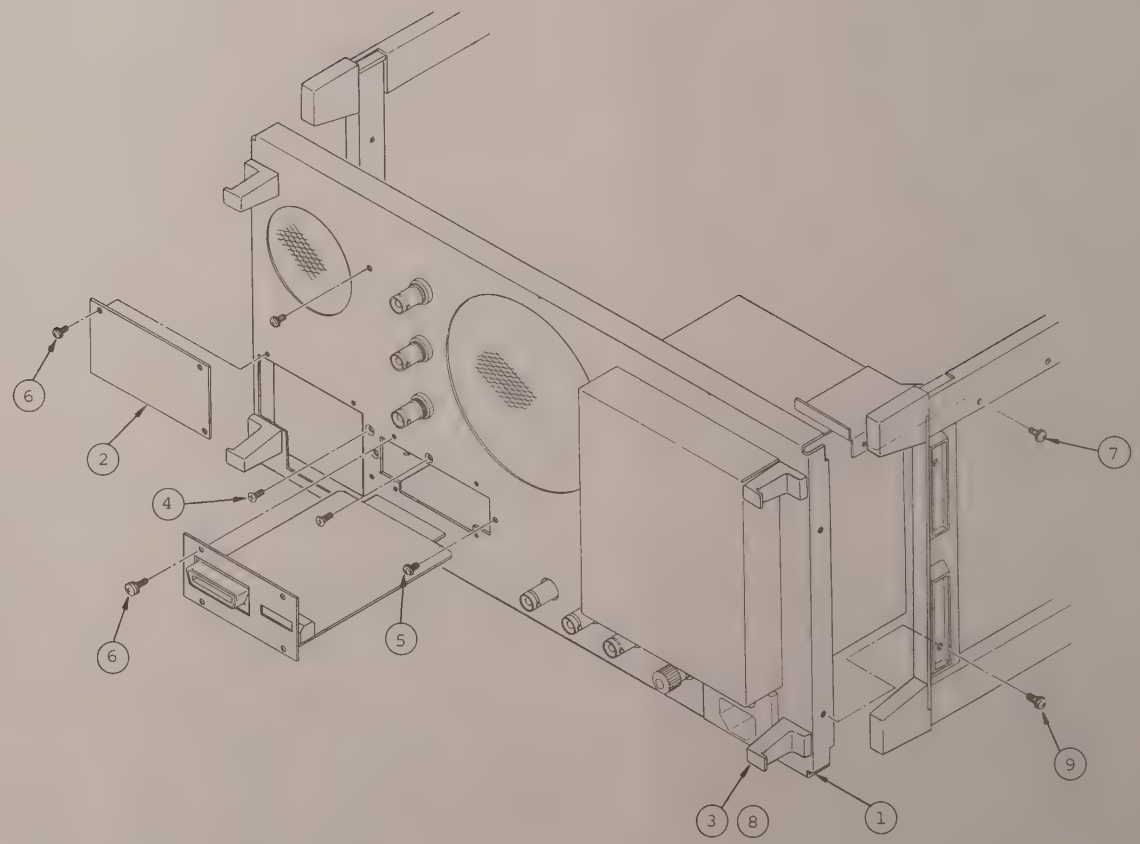

Fig. 2-5 Transmitter Disassembly (Rear Panel)

No.	PART No.	DESCRIPTION	REMARK	Q'TY
(1)	443B83227	Cover		1
(2)				
(3)				
(4)	2.6NPS8B3+SW	Screw		9

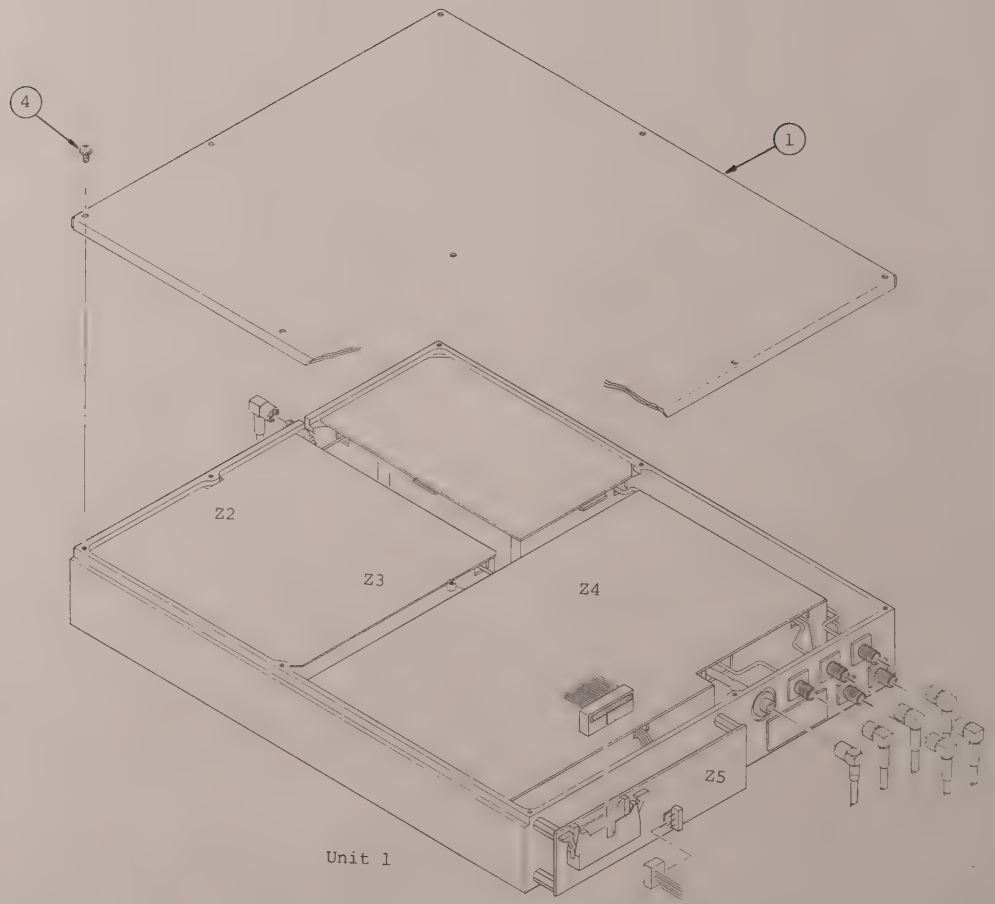

Fig. 2-6 Transmitter Disassembly
(Z1: Synthesizer Section
- Unit 1)

No.	PART No.	DESCRIPTION	REMARK	Q'TY
1	42B12487	Cover		1
2				
3				
4	34H85517	Cap		3
5	2.6NPS8B3+SW	Screw		10

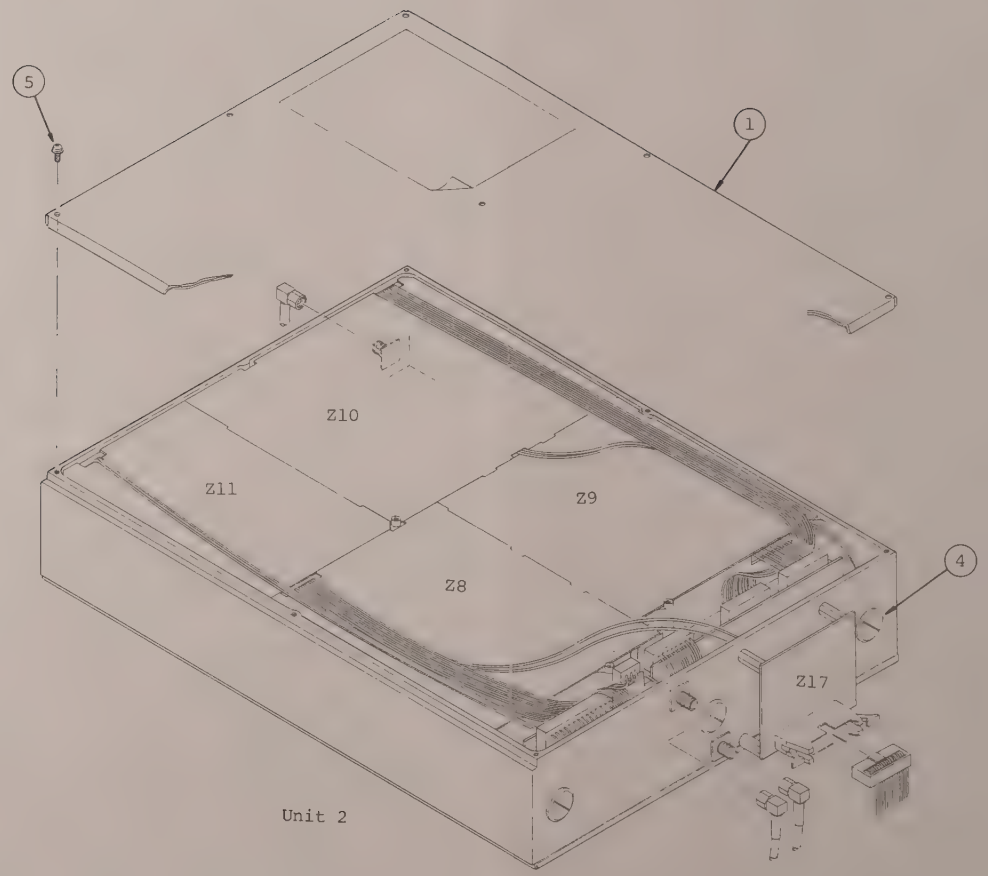

Fig. 2-7 Transmitter Disassembly
(Z1: Synthesizer Section
- Unit 2)

No.	PART No.	DESCRIPTION	REMARK	Q'TY
(1)	42B12489	Cover		1
(2)				
(3)				
(4)	34H85517	Cap		3
(5)	2.6NPS8B3+SW	Screw		

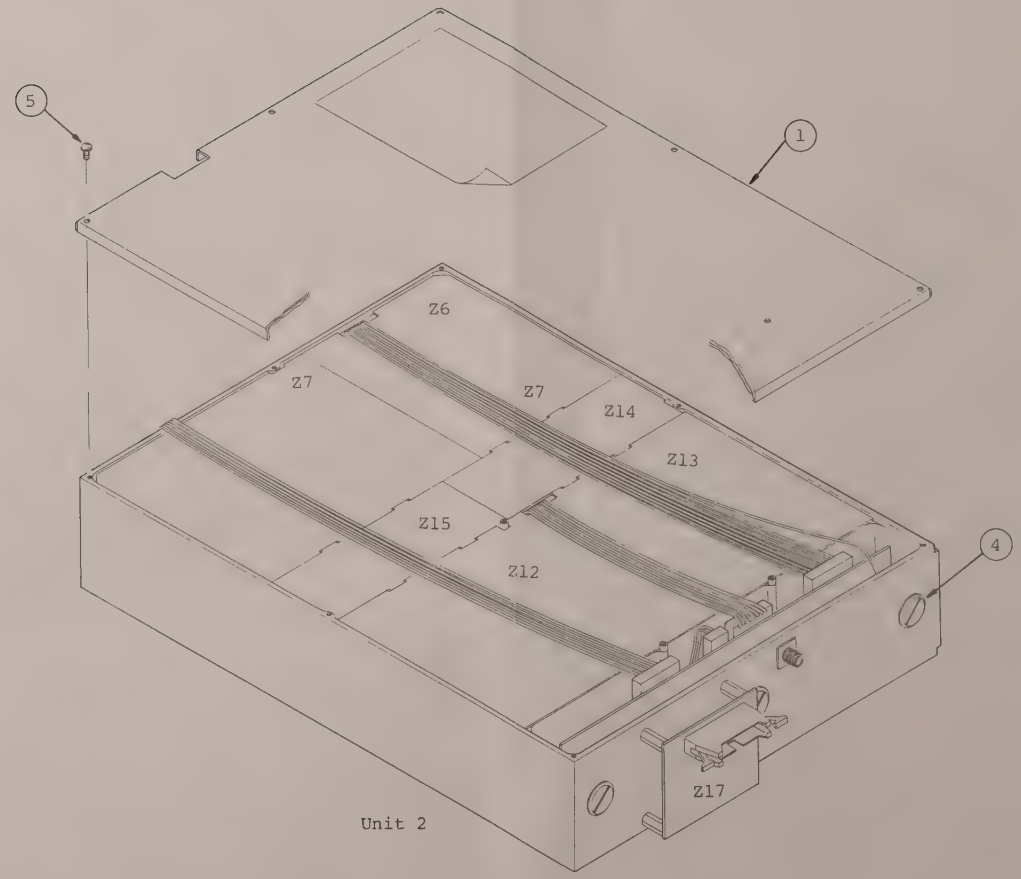

Fig. 2-8 Transmitter Disassembly
(Z1: Synthesizer Section
- Unit 2)
(Continued)

2.2.4 Receiver disassembly

No.	PART No.	DESCRIPTION	REMARK	Q'TY
1	42B12567	Front panel		1
2	422B12470	Sub panel		1
3	44B77000	Plate		1
4	43B33509	Board clamp		1
5	3FPS10B3	Screw		5
6	3FPS8B3	Screw		2
7	3NPS6B3+SW	Screw		10
8	3NPS8B3+SW	Screw		1
9	3NPS10B3+SW	Screw		2
10	3NPS10B3+SW+WB	Screw		2

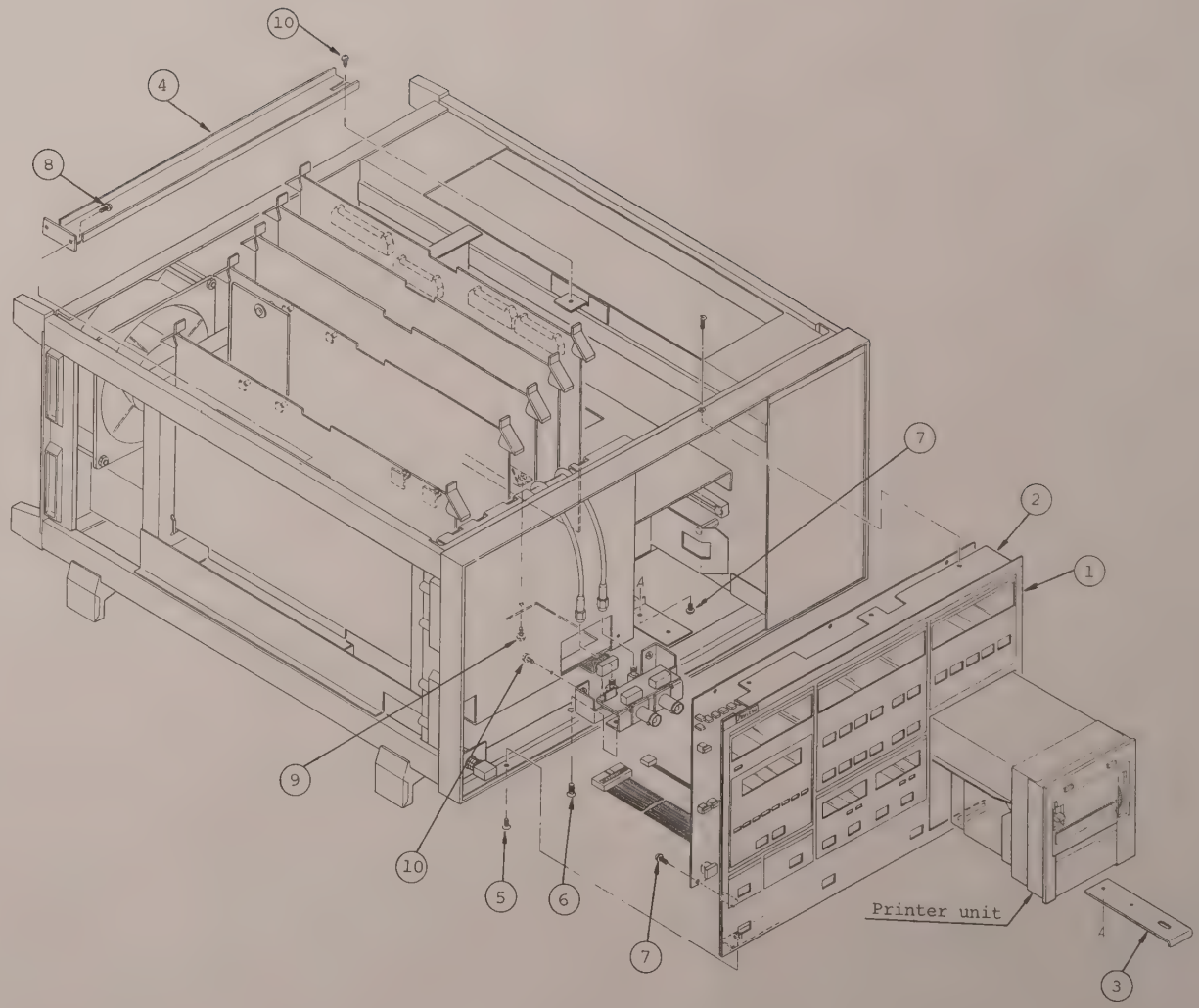

Fig. 2-9 Receiver Disassembly (Front Panel)

No.	PART No.	DESCRIPTION	REMARK	Q'TY
1	422B12472	Rear panel		1
2	44B84415	Plate		1
3	34B73670	Cord holder		4
4	3FPS8B3	Screw		3
5	3NPS6B3+SW	Screw		4
6	3NPS8B3+SW	Screw		2
7	3BPS8S3+WBS	Screw		7
8	4NPS10S7+SW	Screw		4
9	4NPS12S7+SW	Screw		4

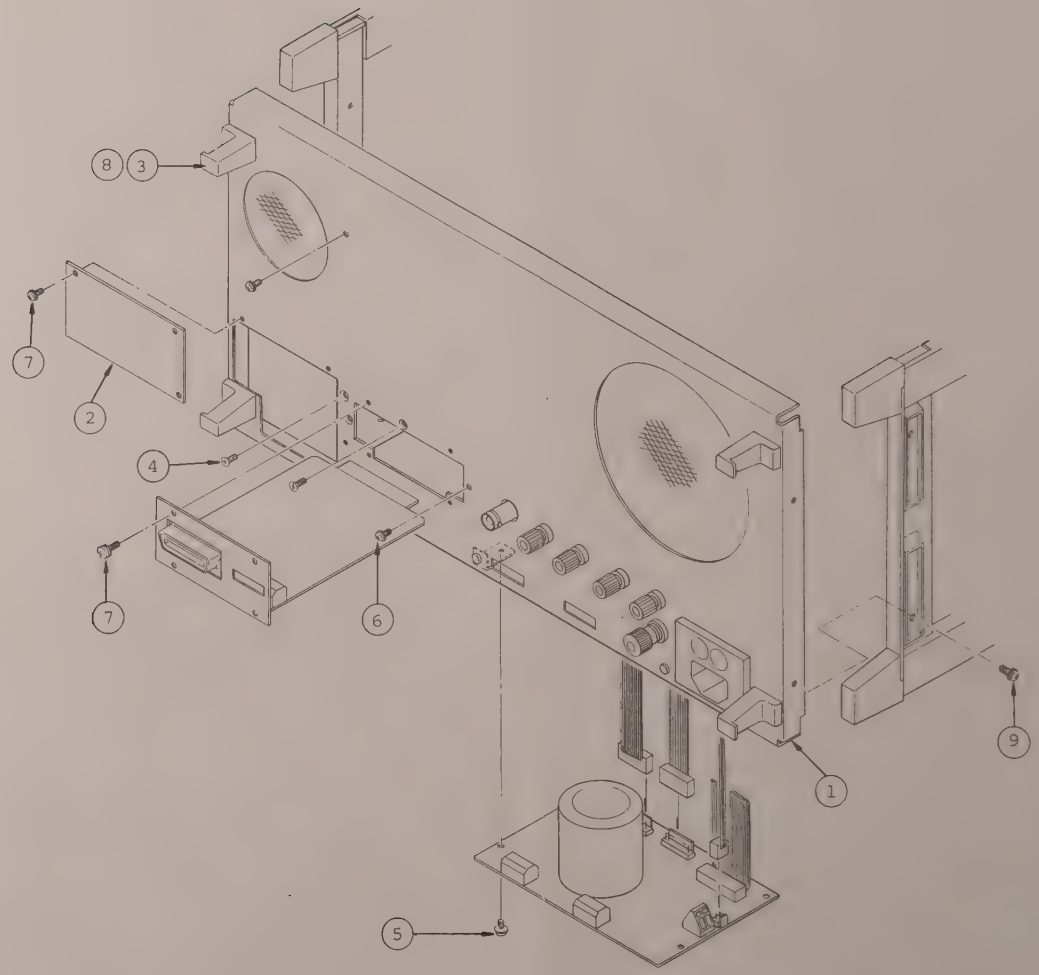

Fig. 2-10 Receiver Disassembly (Rear panel)

Printer Unit Disassembly

Step	Procedure
1	Remove the paper case (1) from the body (2) (five screws).
2	Remove PC board (3) from the body (2) (five screws).
3	Remove connector (5) of the printer section (4) connected with the PC board (3).
4	Remove the COVER (7) from the body (2) (two screws)
5	Remove the printer case (6) from the body (2) (six screws).
6	Remove the printer section (4) from the body (2) (Three screws).

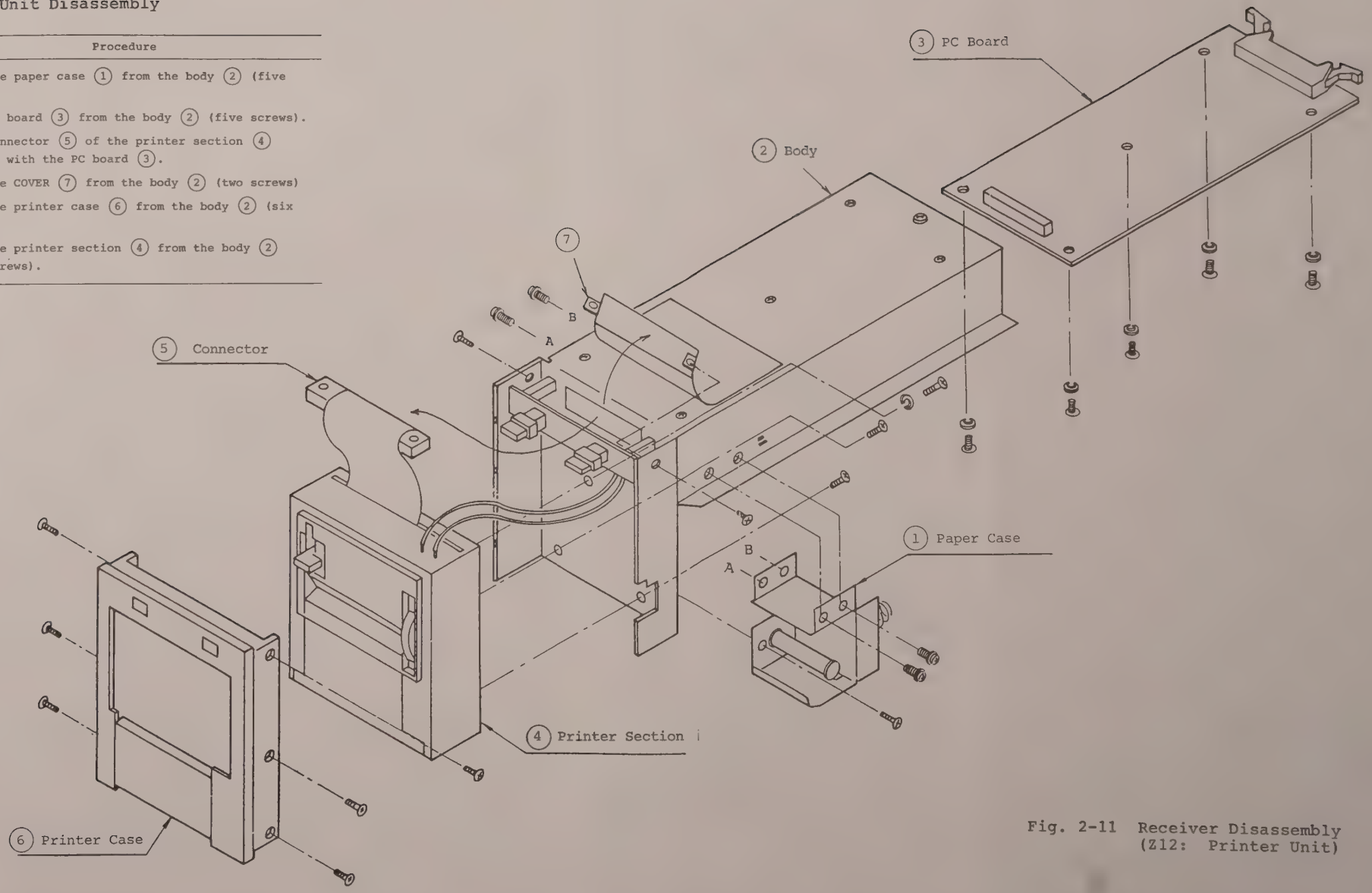

Fig. 2-11 Receiver Disassembly
(Z12: Printer Unit)

2.3 Exposed Views

Figures 2-12 to 2-15 show the top and bottom exposed views of the transmitter and the receiver.

Locations of some parts (PC board with Z numbering, J: connector, T: transformer, and G: fan) are indicated by arrows.

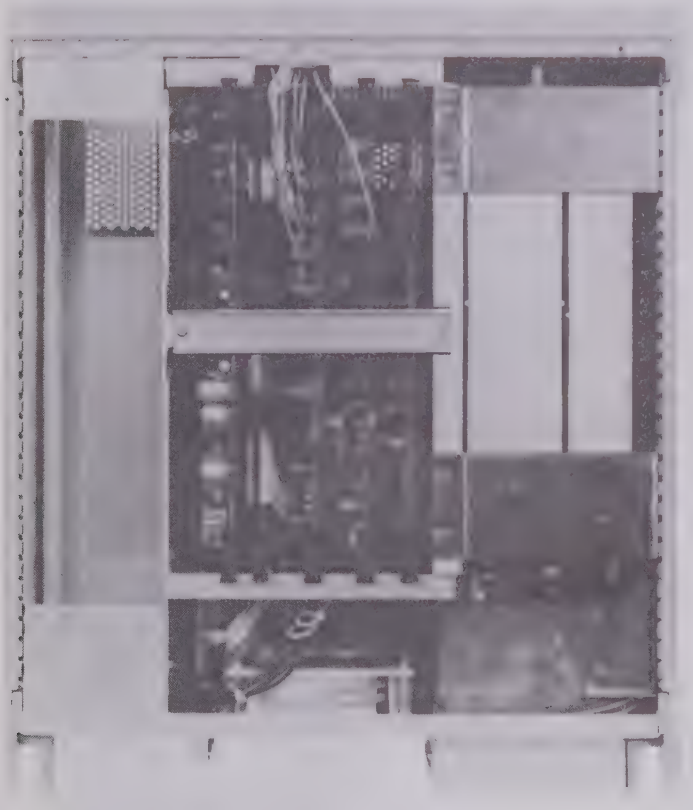

Fig. 2-12 Top View of Transmitter

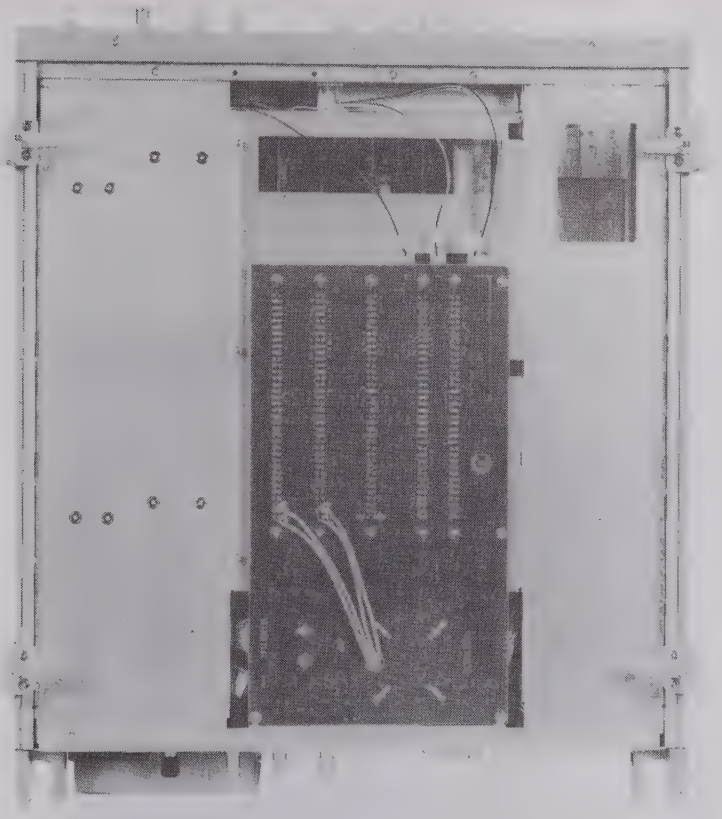

Fig. 2-13 Bottom View of Transmitter

Fig. 2-14 Top View of Receiver

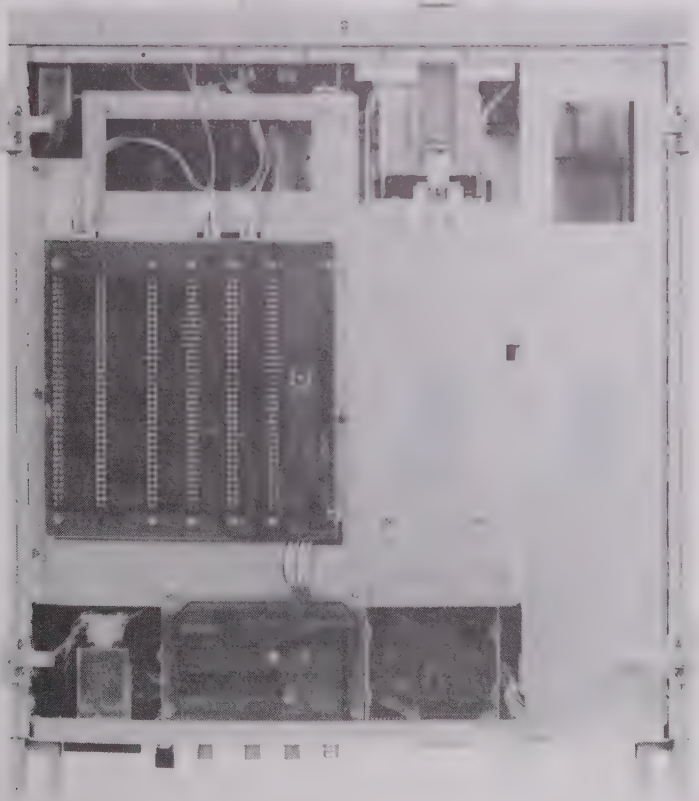

Fig. 2-15 Bottom View of Receiver

SECTION 3

TROUBLESHOOTING AND ADJUSTMENTS

3.1 Introduction

Section 3 describes how to troubleshoot and adjust the instrument when trouble occurs during measurement or when abnormalities are detected during performance check operations.

This section also explains checking and replacement of parts, principles of operation providing details on circuits, and the equipment necessary to make repairs and adjustments.

Troubleshooting can be diagrammed as follows.

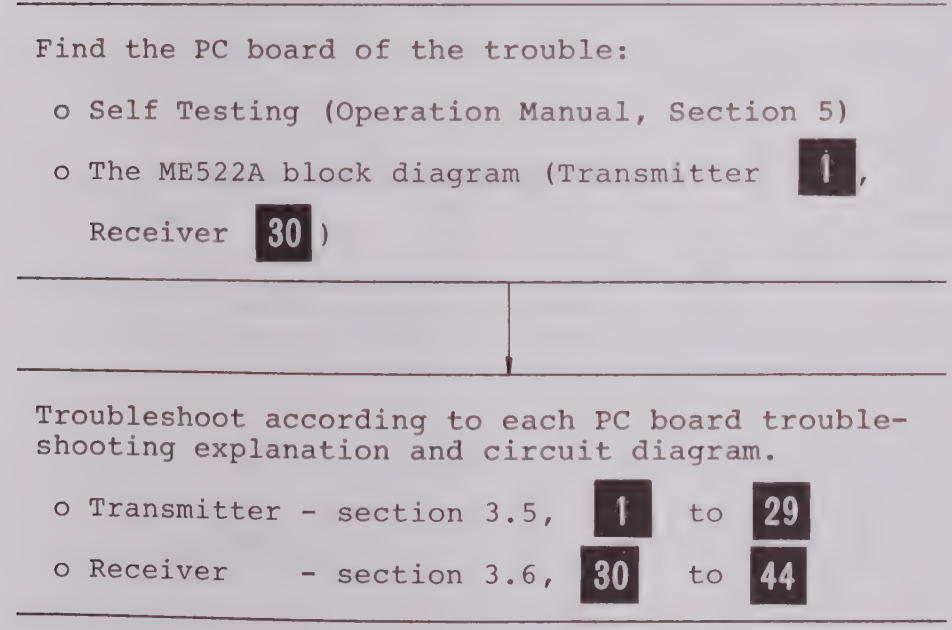

Fig. 3-1 Troubleshooting Procedure

3.2 Checking and Replacing Parts, and Changing AC Power Supply Rating

3.2.1 Explanation of identification markings on the PC board

As shown in Fig. 3-2, the ME522A PC board has a unified ASSEMBLY number, DRAWING number, and REVISION number.

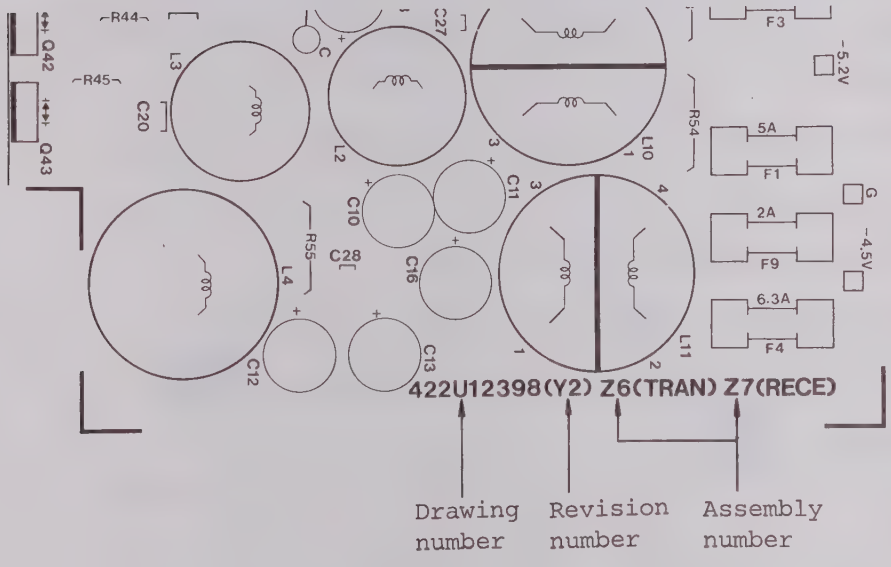

Fig. 3-2 PC Board Marking Explanation

3.2.2 Notes on Soldering

(1) Use an ordinary 30 to 40 watt pencil type soldering iron.

(2) Before using the soldering iron, be sure it is insulated. If not, it may damage the part.

(3) When removing a soldered part from a circuit board or soldering in a new part, nip the part lead with tweezers to shunt heat.

(4) The tips of major part leads are bent behind the PC board to ensure tight support. To remove a part, first lift up the tips of the leads and then remove the part.

3.2.3 Semiconductor markings

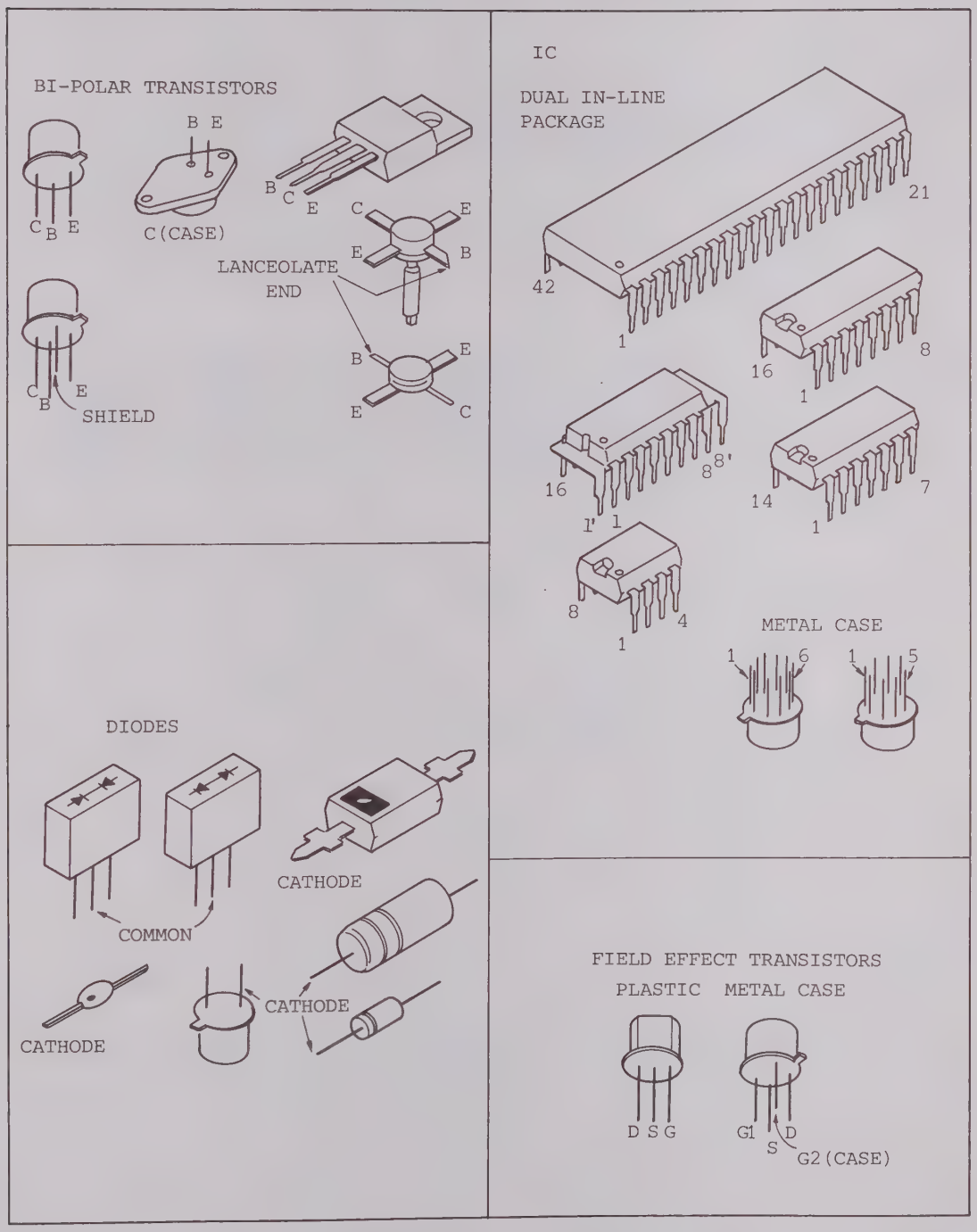

Fig. 3-3 Semiconductor Markings

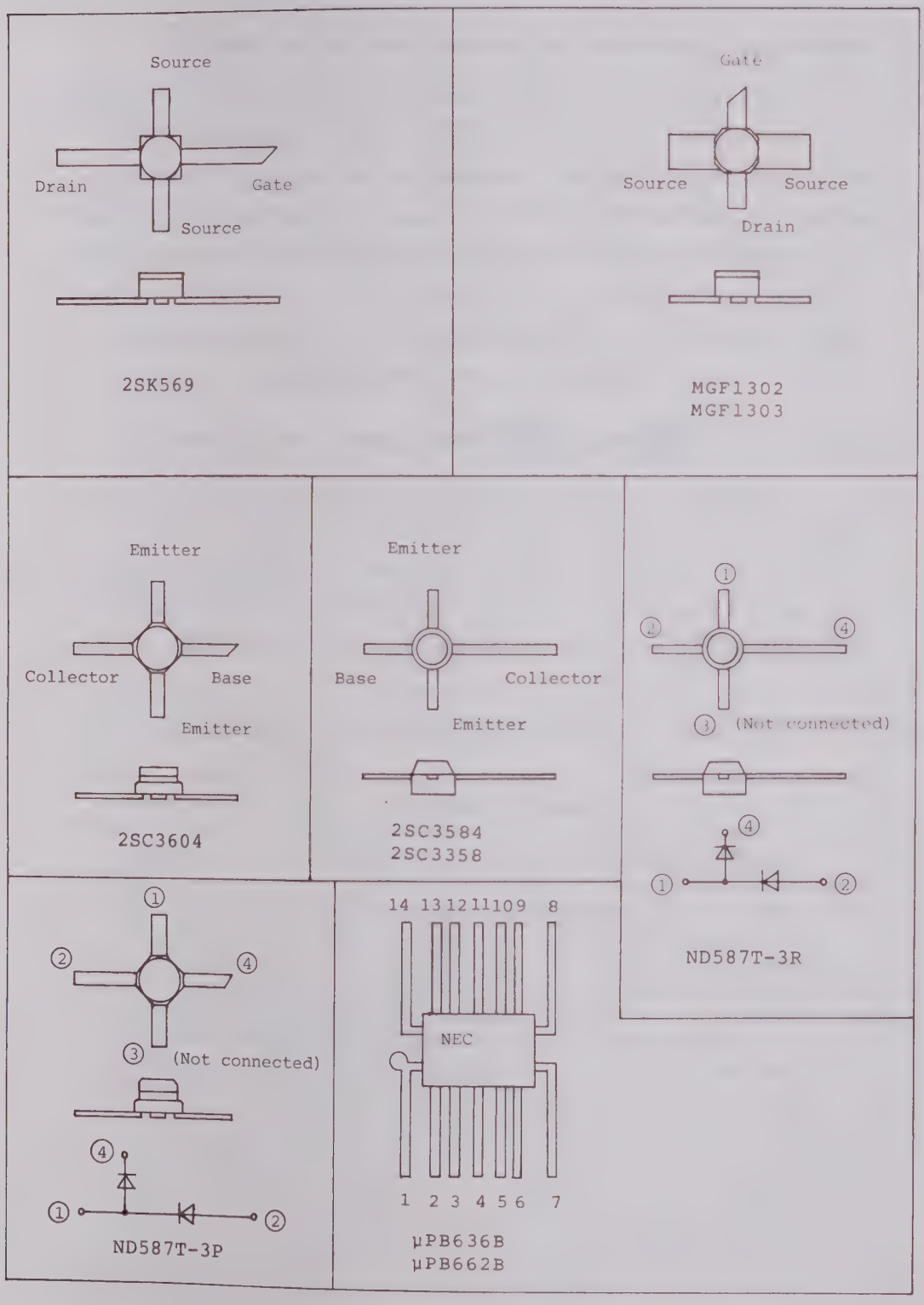

Fig. 3-3 Semiconductor Markings (Continued)

3.2.4 Transistor check

(1) Check of transistors mounted on the PC board

Transistors can be checked for acceptable quality in the operating state by measuring the base and emitter potentials. The NPN type silicon transistor shows a value in which the base potential is 0.6 or 0.7 V higher than the emitter potential. In the PNP silicon transistor, the former is 0.6 or 0.7 V lower than the latter. Transistors are therefore faulty if these relationships are not satisfied.

(2) Check of transistors removed from the PC board

Transistors can be checked by measuring the resistance values among the emitter, base, and collector using a circuit tester. Standard values are given in Table 3-1. Note that this check should be performed at a measuring current of less than 100 μA.

Table 3-1 Test of Transistors Demounted from the Circuit

Type of Transistors	Connect Ohmmer		Resistance to be Measured (ohm)
	Positive lead to	Negative lead to	
PNP silicon	Emitter, Collector	Base	1 to 10 k
	Emitter	Collector	Very high
NPN silicon	Base	Emitter, Collector	1 to 10 k
	Emitter	Collector	Very high

3.2.5 Ac line power supply changes

The ME522A is provided with a power transformer with several taps so that nominal ac line voltage specified from 100 to 254 Vac can be used.

When changing the nominal ac line voltage, change the wiring on the appropriate primary taps of the power transformer in accordance with the drawing below.

CAUTION

Do not change the fan (G1) wiring.

(See circuit diagrams 1 and 30.

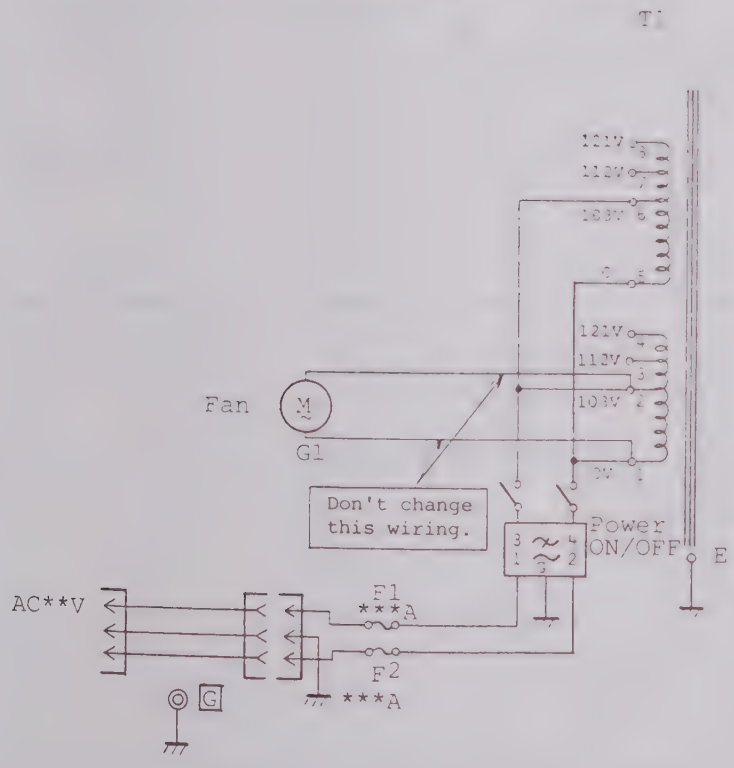

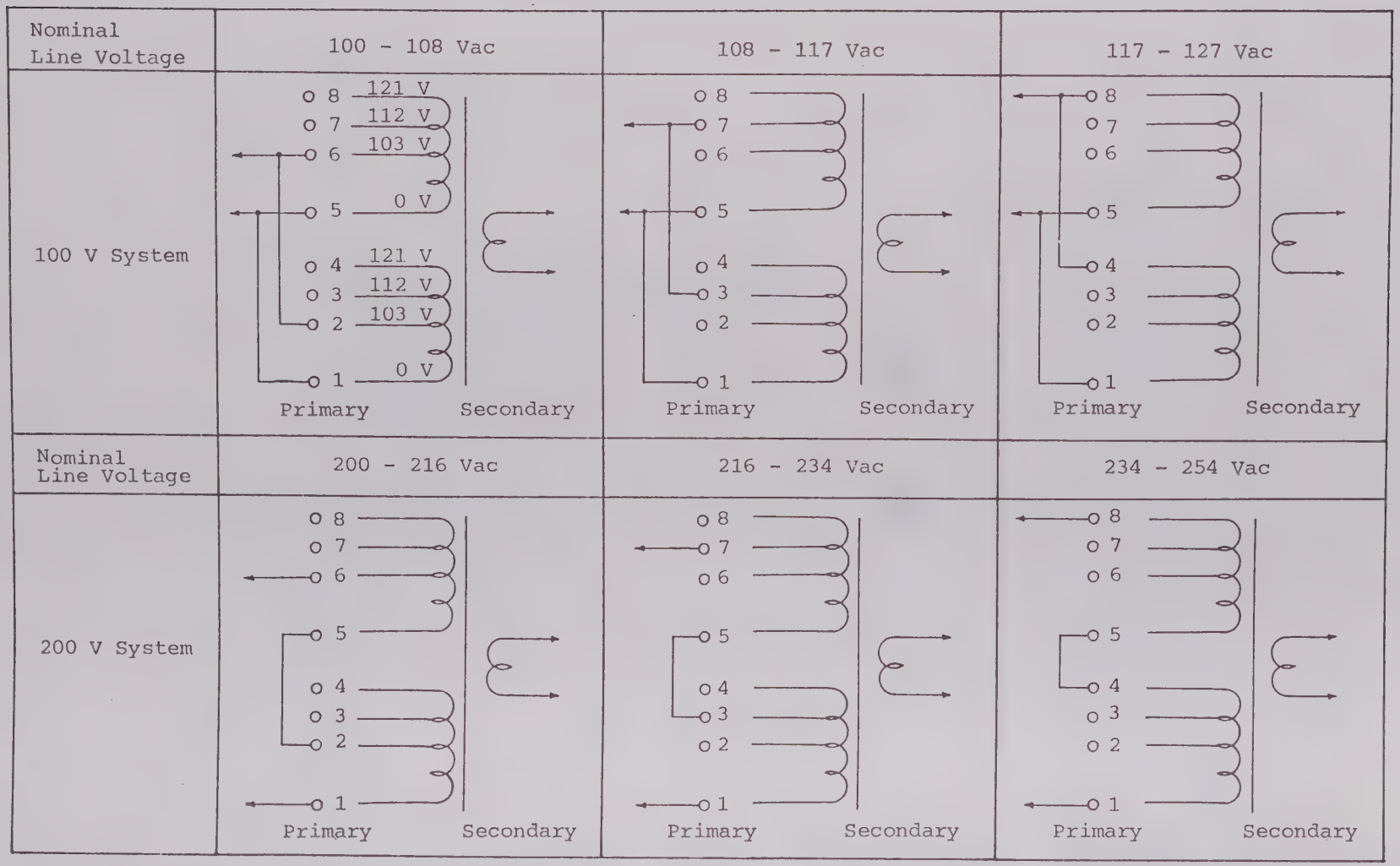

All the tap voltage ratings are the same as shown in the figure of a 100-108 Vac system.

Fig. 3-4 Power Transformer Tap Connection

3.3 Equipment Required for Troubleshooting and Adjustment

The equipment listed in Table 3-2 and Table 3-3 are recommended during adjustment and troubleshooting. Different test equipment may be used when it meets the required characteristics listed in the table.

Table 3-2 Equipment Required for Troubleshooting and Adjustment of ME522A Transmitter

No.	Name (Recommended Type, Anritsu)	Major Specification Required
1	Sampling Oscilloscope	Frequency range: Dc to 10 GHz
2	Oscilloscope	Frequency range: Dc to 50 MHz
3	Frequency Counter	Frequency range: 1 kHz to 700 MHz
4	Dc Voltmeter	Meas. range: ±40 V Max. Resolution: 0.01 V
5	Synthesized Signal Generator (MG655A)	Frequency range: 1 MHz to 700 MHz Resolution: 1 kHz
6	Frequency Divider (MH688A)	Frequency range: 1 MHz to 700 MHz Divide ratio: 1/2, 1/4, 1/8
7	Probe (MP671A)	Frequency range: 1 MHz to 3 GHz 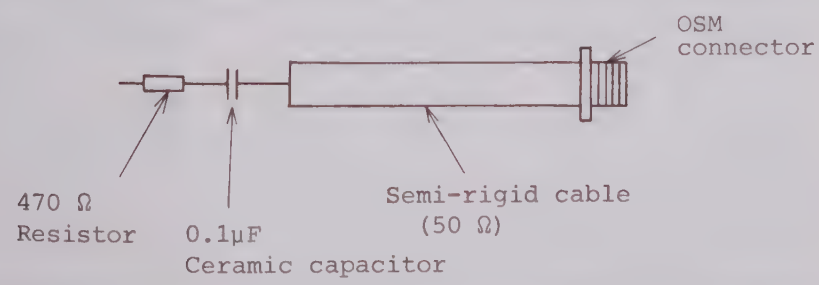

Table 3-3 Equipment Required for Troubleshooting and Adjustment of ME522A Receiver

No.	Name (Recommended Type, Anritsu)	Major Specification Required	
1	Sampling Oscilloscope	Frequency range:	Dc to 10 GHz
2	Oscilloscope	Frequency range:	Dc to 50 MHz
3	Frequency Counter	Frequency range: Period: Accuracy:	Dc to 4 MHz 1.000 000 sec 10^{-6}
4	Dc Voltmeter	Meas. range: Resolution:	30 V Max. 0.01 V
5	Frequency Divider (MH688A)	Frequency range: Divide ratio:	Dc to 700 MHz 1/2, 1/4, 1/8
6	Probe (MP671A)	Frequency range:	1 MHz to 3 GHz

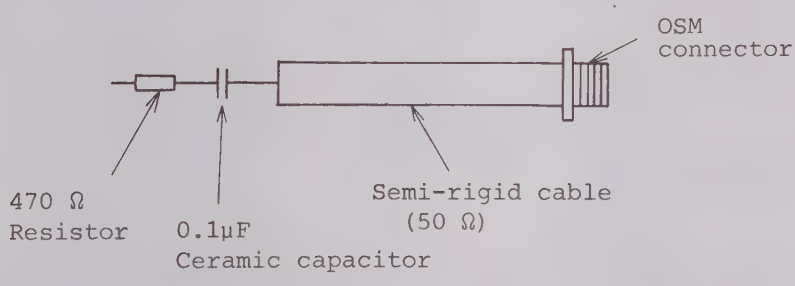

3.4 Circuit Reference

The PC board of the ME522A Transmitter and ME522A Receiver are given Z numbers such as T-Z3/R-Z10 (T: Transmitter, R: Receiver).

Table 3-4 and 3-5 give the list of the Z numbers, circuit diagram names, PC board drawing numbers, and parts list numbers. SCHEMATIC No.s are the numbers of the circuit diagrams shown in this section.

Parts lists are shown in section 4.

Table 3-4 ME522A Transmitter Circuit Reference

Unit	Schematic No.	Circuit Diagram Name	Z No.	PC Board Drawing No.	Parts List No.
	1	ME522A Transmitter	——	——	44W83022
	2	Synthesizer section	T-Z1	——	44W83060
U1	3	10 MHz	T-Z1 (Z1)	442U83125	44W83061
U1	4	100 MHz	T-Z1 (Z2)	442U83127	44W83062
U1	5	100 MHz x N	T-Z1 (Z3)	442U83129	44W83063
U1	6	OUTPUT DIVIDER	T-Z1 (Z4)	432U33470	44W83064
U1	7	U1 SIGNAL SUPPLY	T-Z1 (Z5)	442U85699	44W83065
U2	8	REFERENCE SIGNAL BRANCHER	T-Z1 (Z6)	442U83131	44W83067
U2	9	10 kHz/1 MHz LOOP	T-Z1 (Z7)	432U34768	44W83068
U2	10	100 MHz LOOP	T-Z1 (Z8)	432U34785	44W83069
U2	11	100 MHz VCO	T-Z1 (Z9)	432U33474	44W83070
U2	12	10 MHz LOOP	T-Z1 (Z10)	432U34763	44W83071
U2	13	10 MHz/20 MHz DOUBLER	T-Z1 (Z11)	442U83149	44W83072

Table 3-4 ME522A Transmitter Circuit Reference (Continued)

Unit	Schematic No.	Circuit Diagram Name	Z No.	PC Board Drawing No.	Parts List No.
U2	14	MAIN LOOP	T-Z1 (Z12)	432U34787	44W83073
U2	15	MAIN VCO	T-Z1 (Z13)	432U33476	44W83074
U2	16	MAIN MIX 1	T-Z1 (Z14)	442U83155	44W83075
U2	17	MAIN MIX 2	T-Z1 (Z15)	442U83157	44W83076
U2	18	U2 MOTHERBOARD	T-Z1 (Z16)	432U33478	44W83077
U2	19	U2 SIGNAL SUPPLY	T-Z1 (Z17)	442U83161	44W83078
	20	PATTERN GENERATOR-I	T-Z2	422U12390	44W83023
	21	PATTERN GENERATOR-II	T-Z3	422U12392	44W83024
	22	OUTPUT	T-Z4	422U12394	44W83025
	23	CONTROL	T-Z5	422U12396	44W83026
	24	POWER SUPPLY	T-Z6	422U12398	44W83027
	25	DISPLAY	T-Z7	422U12400	44W83028
	26	50 Ω/75 Ω TRANSDUCER	T-Z8	442U83048	44W83029
	27	MOTHERBOARD	T-Z9	422U12402	44W83031
	28	GP-IB	T-Z13	442U83054	44W83046
	29	RS-232C	(Option 10) T-Z14	442U83056	44W83047

Table 3-5 ME522A Receiver Circuit Reference

Schematic No.	Circuit Diagram Name	Z No.	PC Board Drawing No.	Parts List No.
30	ME522A RECEIVER	——	——	44W83032
31	INPUT	R-Z1	422U12404	44W83033
32	ERROR DETECTOR	R-Z4	422U12410	44W83036
33	COUNTER	R-Z5	422U12412	44W83037
34	CONTROL	R-Z6	422U12414	44W83038
35	POWER SUPPLY	R-Z7	422U12398	44W83039
36	DISPLAY	R-Z8	422U12418	44W83040
37	50 Ω/75 Ω TRANSDUCER	R-Z9	442U83050	44W83041
38	MOTHERBOARD	R-Z10	432U33434	44W83043
39	SWITCH	R-Z11	442U83052	44W83044
40	PRINTER UNIT	R-Z12	——	44W85802
41	PRINTER INTERFACE	R-Z12 (Z1)	432U34770	44W85804
42	PRINTER CONTROL	R-Z12 (Z2)	442U77432	44W85805
28	GP-IB	R-Z13	442U83054	44W83046
29	RS-232C	(Option 11) R-Z14	442U83056	44W83047

3.5 Transmitter Troubleshooting and Adjustment

3.5.1 Circuit Description

Figure 3-5 is a block diagram of the transmitter.

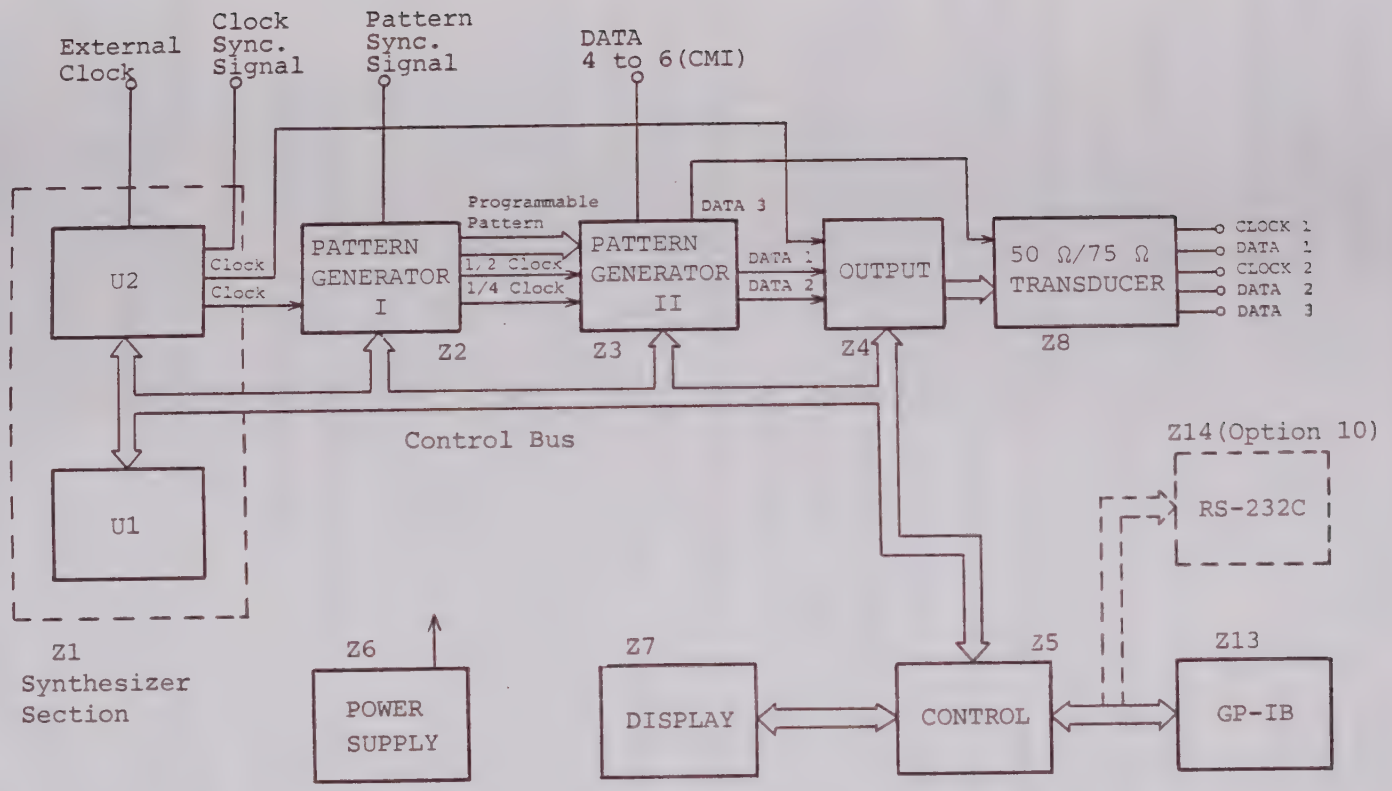

Fig. 3-5 ME522A Transmitter Simplified Block Diagram

The transmitter consists of a Synthesizer section (T-Z1), PATTERN GENERATOR-I (T-Z2), PATTERN GENERATOR-II (T-Z3), OUTPUT (T-Z4), 50Ω/75Ω TRANSDUCER (T-Z8), CONTROL (T-Z5), DISPLAY (T-Z7), GP-IB (T-Z13), and POWER SUPPLY (T-Z6).

When option 10 (RS-232C interface) is installed, the RS-232C (T-Z14) replaces the GP-IB (T-Z13).

Synthesizer section (T-Z1) generates a pulse wave of any chosen frequency from 1 to 700 MHz set by the frequency setting key on DISPLAY (T-Z7). An external clock signal is also input at the Synthesizer section (T-Z1) from the external clock input connector and the internal synthesizer signal or the external clock signal is selected and branched to three signal routes.

One signal route goes to the outside as the clock synchronizing signal. The other two signal routes go to PATTERN GENERATOR-I (T-Z2) and OUTPUT (T-Z4), respectively.

PATTERN GENERATOR-I (T-Z2) generates the programmable word patterns (programmable A, B, C pattern, alternate D/E pattern, and isolated pattern) for two systems (DATA1 and DATA2) by means of the clock signal from the Synthesizer section (T-Z1). It also generates the error signal for error addition. These signals and the 1/4 divided clock and 1/2 divided clock signals are sent to PATTERN GENERATOR-II (T-Z4).

PATTERN GENERATOR-II (T-Z3) generates a pseudorandom pattern (PRBS pattern) for two systems (DATA1 and DATA2) by means of the 1/4 divided clock signal sent from PATTERN GENERATOR-I (T-Z2). The data bit rate is 1/4 of the actual output rate. This pseudorandom pattern signal or the programmable pattern signal from PATTERN GENERATOR-I (T-Z2) is selected. ERROR ADDITION ON adds the error signal from PATTERN GENERATOR-I (T-Z2) to this pattern signal.

Since the pattern signals up to this point has a data bit rate of the 1/4 clock frequency, the pattern bit rate is quadrupled by multiplexing it by the 1/4 and 1/2 divided clocks and becomes two data signals having the same data bit rate as the clock signals. These data signals are sent to OUTPUT (T-Z4).

One of these signals is converted to the CMI code and branched to four signal routes and output to the outside from the DATA3 to DATA6 connectors. The CMI output is limited in operation frequencies from 1 to 150 MHz.

The clock signal from Synthesizer section (T-Z1) and the data signal from PATTERN GENERATOR-II (T-Z4) are input to OUTPUT (T-Z4). The DATA1 AND DATA2 signals are retiming and wave-shaped. After code conversion (NRZ, RZ, or $\overline{RZ}$) and the output pulse amplitude offset are made the set value, the DATA1 is output. DATA2 (NRZ code) is wave-shaped and made a fixed level (0/-1 V) and then output. The clock signal is branched to CLOCK1 and CLOCK2 routes. CLOCK1 is output after the polarity is changed (CLOCK, $\overline{CLOCK}$), and the amplitude and offset voltage are made the set value. CLOCK2 is output after it is wave-shaped and made the fixed level (0/-1 V).

The CLOCK1, CLOCK2, DATA1, and DATA2 signals from OUTPUT (T-Z4) and the DATA3 signal from PATTERN GENERATOR-II (T-Z3) are sent to the 50 Ω/75 Ω TRANSDUCER (T-Z8). These outputs are switched according to the load impedance (50 or 75 Ω) and made the same level and sent to the outside.

For a detailed description of each block, see paragraphs 3.5.2 to 3.5.7.

APPLICATION

REVISIONS

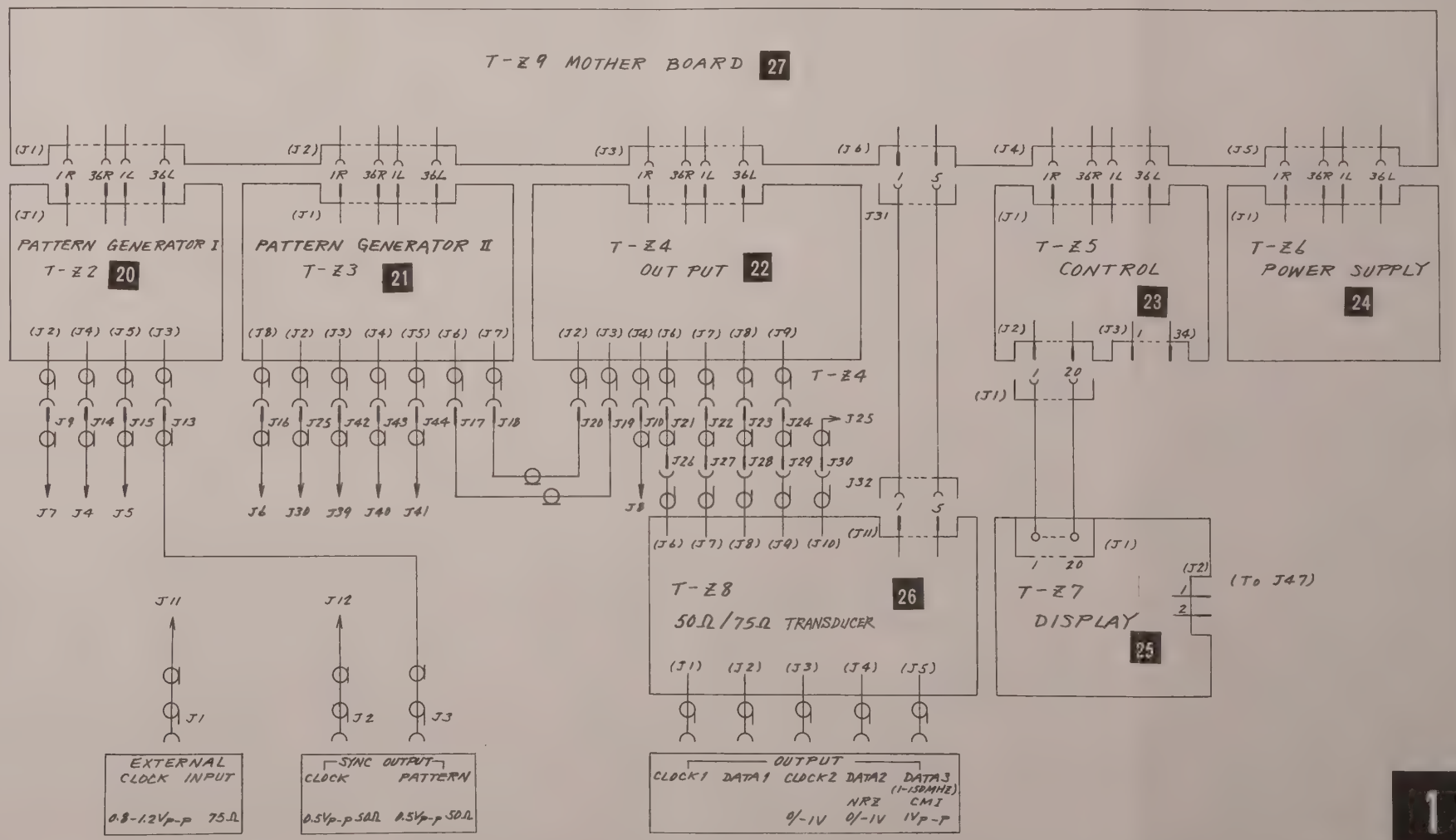

Parts List	44W83022

QTY	ITEM	PART No.	DESCRIPTION	MATERIAL	FINISH	NOTE

CHECKED BY	TRACED BY	SCALE
APPROVED BY	DRAWN BY	:

TITLE: ME522A Transmitter Circuit Diagram

DRAWING No. 43W33414 1/2

ANRITSU CORP.

3-19/3-20

DEP

APPLICATION

REVISIONS

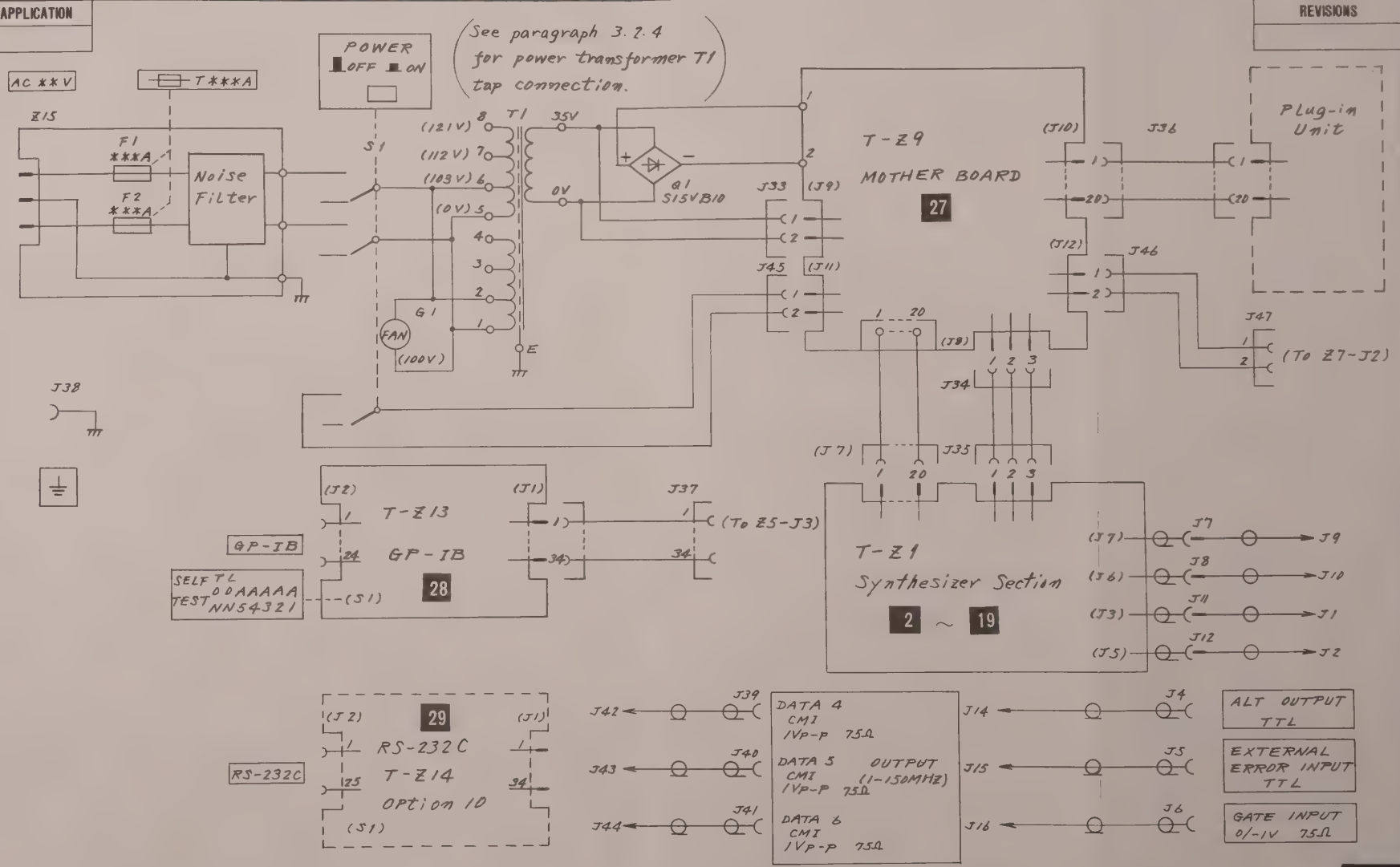

QTY	ITEM	PART No.	DESCRIPTION	MATERIAL	FINISH

CHECKED BY | TRACED BY | SCALE

APPROVED BY | DRAWN BY | :

TITLE: ME522A Transmitter Circuit Diagram

DRAWING No. 43W33414 2/2

DEP

ANRITSU CORP.

3-21/3-22

3.5.2 T-Z6 POWER SUPPLY PC board 24

(1) Troubleshooting

After lifting the T-Z6 PC board using the extender board, perform troubleshooting (See Fig. 3-6).

Fig. 3-6 T-Z6 PC Board Troubleshooting Configuration

(a) Step 1

Using an oscilloscope, confirm that the waveform shown in Fig. 3-7 is present at TP ❶. At this time, connect the oscilloscope probe ground terminal to the FG (Floating Ground). This applies up to paragraph (e) Step 5.

Using a voltmeter, confirm that the voltage between TP ❶ and FG is within the +35 to +50 V range.

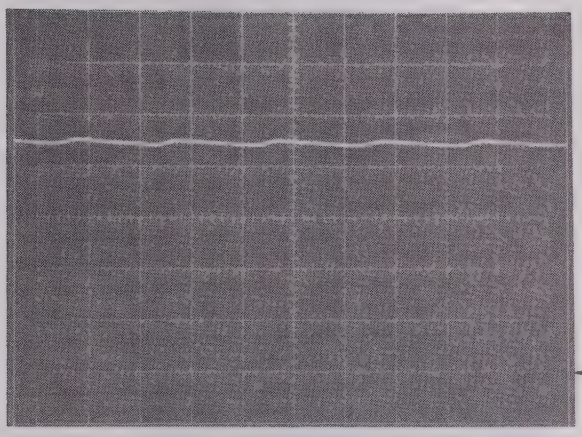

Fig. 3-7 TP ❶ Waveform

If the waveform and voltage are OK, proceed to the next step. If not OK, troubleshoot the circuit (including the motherboard circuit) near TP ❶ .

(b) Step 2

Using a voltmeter, confirm that the voltage between TP ❷ and the FG (Floating Ground) is within the +14 to +18 V range.

If the voltage is OK, proceed to the next step. If not OK, troubleshoot the circuit near TP ❷ .

(c) Step 3

Using an oscilloscope, confirm that the waveform shown in Fig. 3-8 is present at TP ❸ .

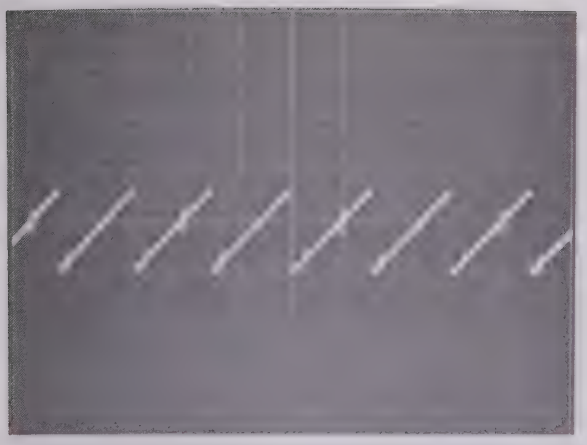

V: 2 V/div
H: 10 µs/div
(Probe ground is at floating ground.)

Fig. 3-8 TP ❸ Waveform

If the waveform is OK, proceed to the next step. If not OK, troubleshoot the circuit near TP ❸ .

(d) Step 4

Using an oscilloscope, confirm that the waveforms shown in Fig. 3-9 are present at TP ❹ and TP ❺ .

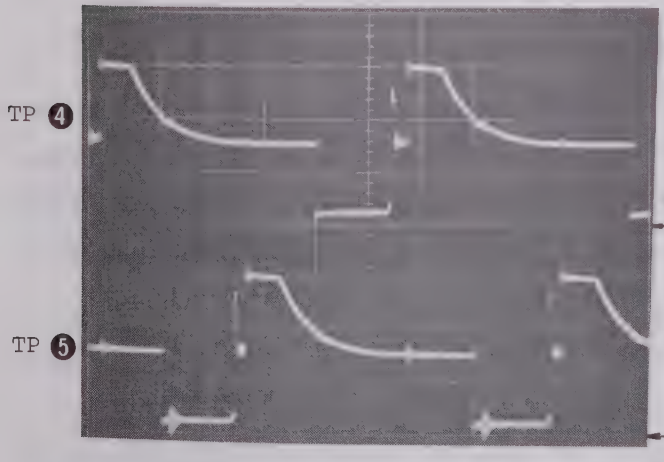

V: 10 V/div
H: 5 µs/div
(Probe ground is at floating ground.)

Fig. 3-9 TP ❹ and TP ❺ Waveforms

If the waveforms are OK, proceed to the next step.

If not OK, troubleshoot the circuit near TP ❹ and TP ❺ .

(e) Step 5

Using an oscilloscope, confirm that the waveform shown in Fig. 3-10 is present at TP ❻ .

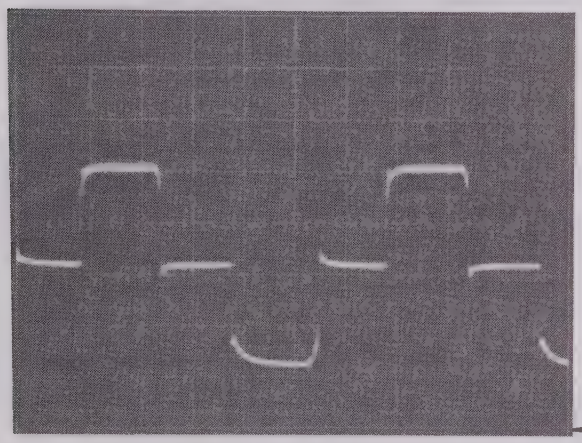

Fig. 3-10 TP ❻ Waveform

(f) Step 6

Using an oscilloscope, confirm that the waveform shown in Fig. 3-11 is present at TP ❼ . At this time, connect the oscilloscope probe ground terminal to terminal A of T5.

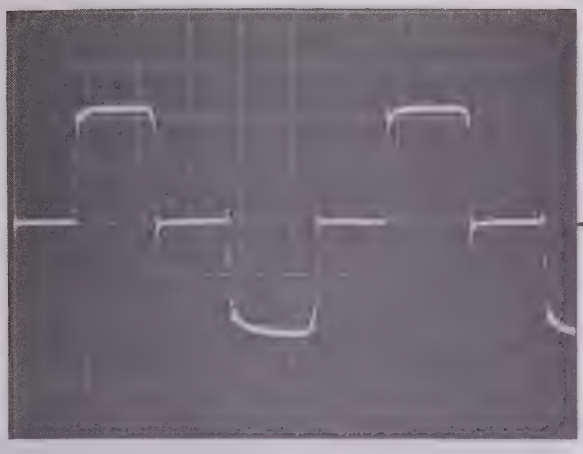

Fig. 3-11 TP ❼ Waveform

If the waveform is OK, proceed to the next step. If not, troubleshoot the circuit near TP ❼ .

(g) Step 7

Using a voltmeter, confirm that the voltage between ground and TP ❽ , TP ❾ , and TP ❿ is within the range shown in Table 3-6.

Table 3-6 +5 V(1) , -5.2 V, and -4.5 V Power Supply Voltages

Test Point	Voltage range
TP ❽ (+5 V (1))	+5.0 to +5.7 V
TP ❾ (-5.2 V)	-5.0 to -5.5 V
TP ❿ (-4.5 V)	-4.2 to -5.0 V

If the voltages are OK, the +5 V(1), -5.2 V, and -4.5 V power supplies are OK. If not OK, troubleshoot the circuit near TP ❽ , TP ❾ , and TP ❿ .

(h) Step 8

Using an oscilloscope, confirm that the waveforms shown in Fig. 3-12 to Fig. 3-14 are present at TP ⓫ to TP ⓮ . When observing TP ⓫ to TP ⓭ , connect the oscilloscope probe ground to the FG (Floating Ground). When observing TP ⓮ , connect the oscilloscope probe ground to terminal 11 of T6.

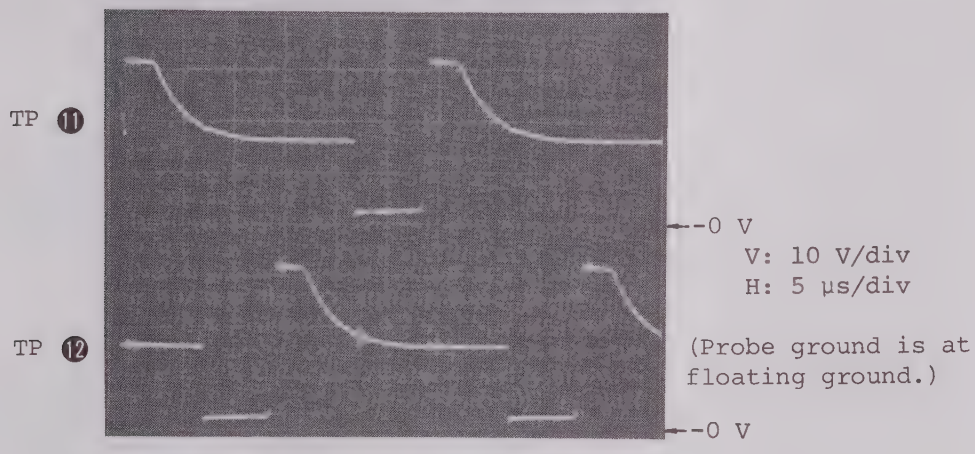

Fig. 3-12 TP ⓫ and TP ⓬ Waveforms

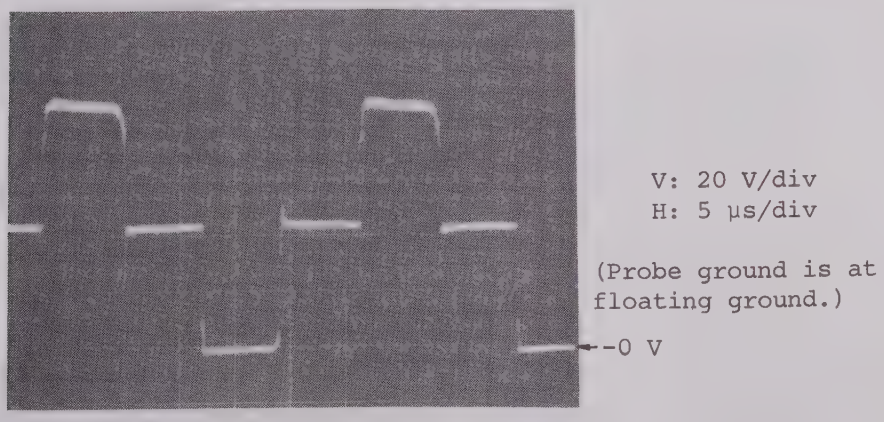

Fig. 3-13 TP ⓭ Waveform

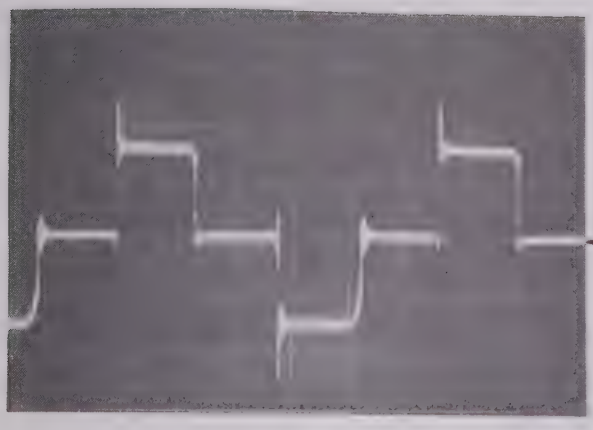

Fig. 3-14 TP ⓮ Waveform

If the waveforms are OK, proceed to the next step. If not, troubleshoot the circuit near TP ⓫ to TP ⓮ .

(i) Step 9

Using a voltmeter, confirm that the voltages between ground and TP ⓯ to TP ⓳ are within the range shown in Table 3-7.

Table 3-7 +5 V(2) -12 V, +12 V, and +30 V Power Supply Voltages

Test Point		Voltage range
TP ⓯		+13 to +14 V
TP ⓰	(+5 V (2))	+4.85 to +5.15 V
TP ⓱	(-12 V)	-11.7 to -12.3 V
TP ⓲	(+12 V)	+11.7 to +12.3 V
TP ⓳	(+30 V)	+25 to +33 V

If the voltages are OK, the +5 V(2), -12 V, +12 V, and +30 V power supplies are OK. If not, troubleshoot the circuit near TP ⓯ to TP ⓳ .

(j) Step 10

Using a voltmeter, confirm that the voltage between the FG (Floating Ground) and TP ⓴ is within the +35 to +50 V range.

If the voltage is not OK, troubleshoot the circuit (including the T-Z9 motherboard) near TP ⓴ .

(This power supply is supplied to the plug-in unit sold separately.)

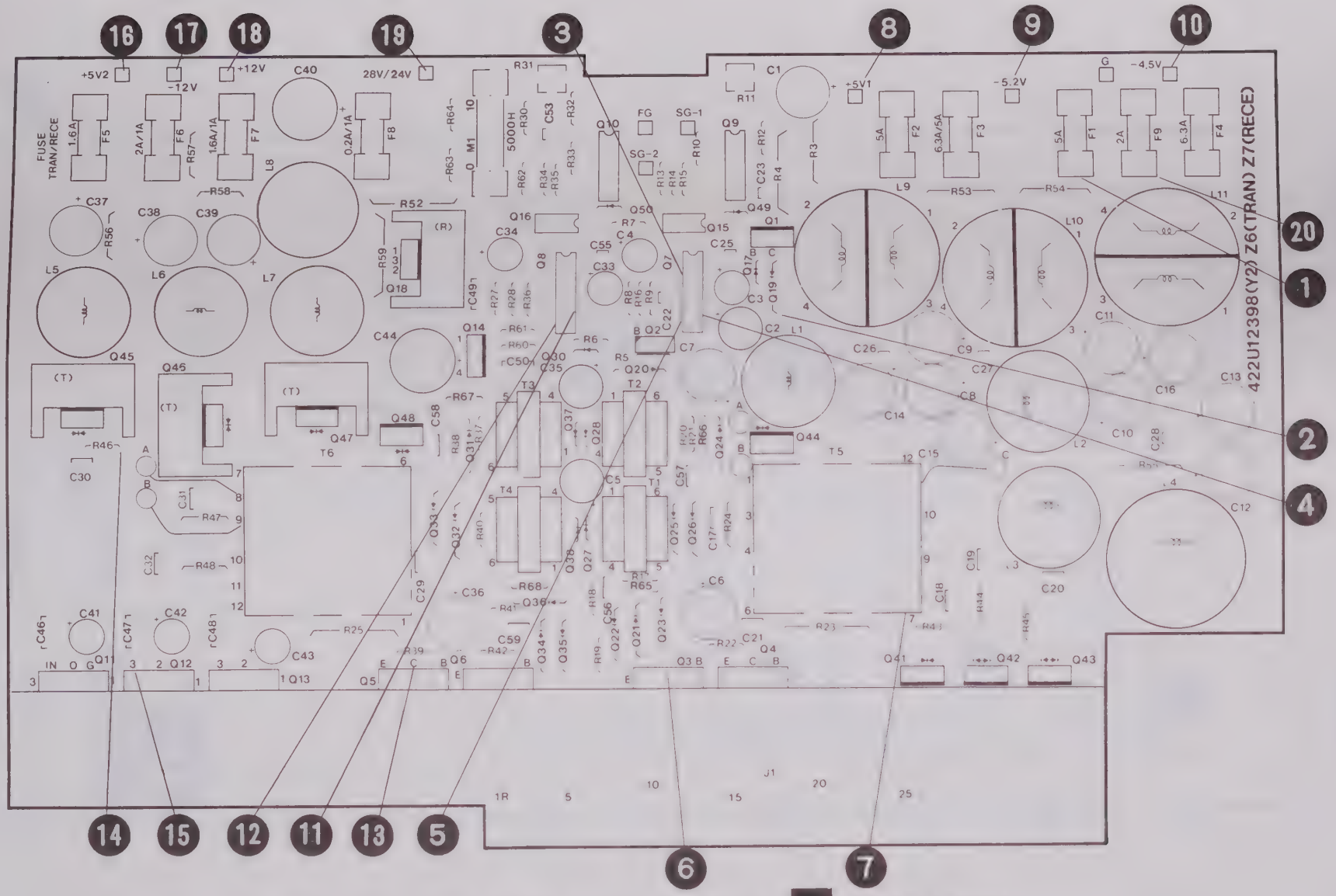

Fig. 3-15 T-Z6 POWER SUPPLY PC Board 24 Parts Layout

APPLICATION

REVISIONS

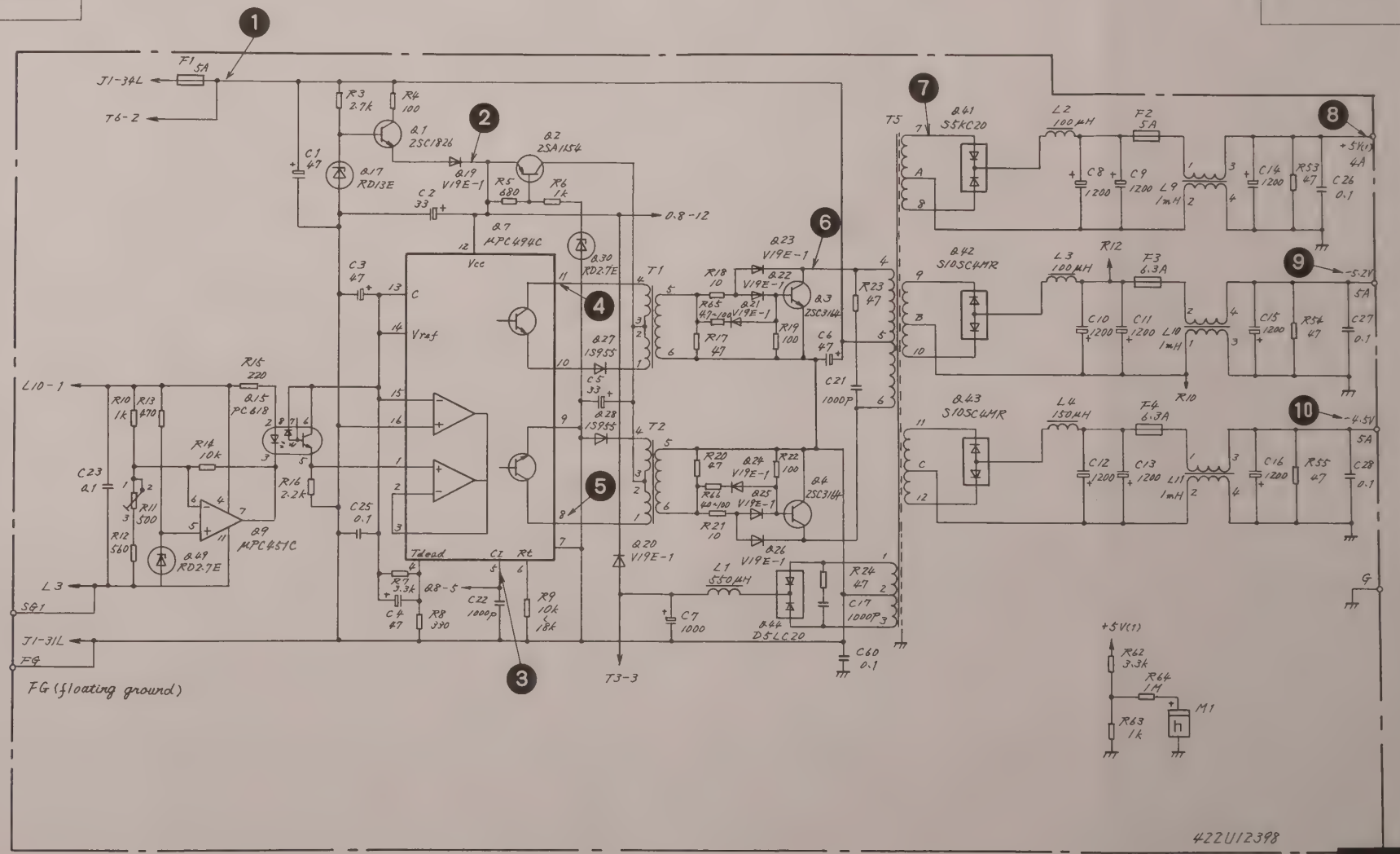

QTY	ITEM	PART No.	DESCRIPTION	MATERIAL	FINISH	NOTE

24

CHECKED BY		TRACED BY	SCALE :
APPROVED BY		DRAWN BY	

TITLE T-Z6 POWER SUPPLY Circuit Diagram.

DRAWING No. 43W33419 1/2

Parts List 44W83027

DEP

43W33419 2/2

APPLICATION

REVISIONS

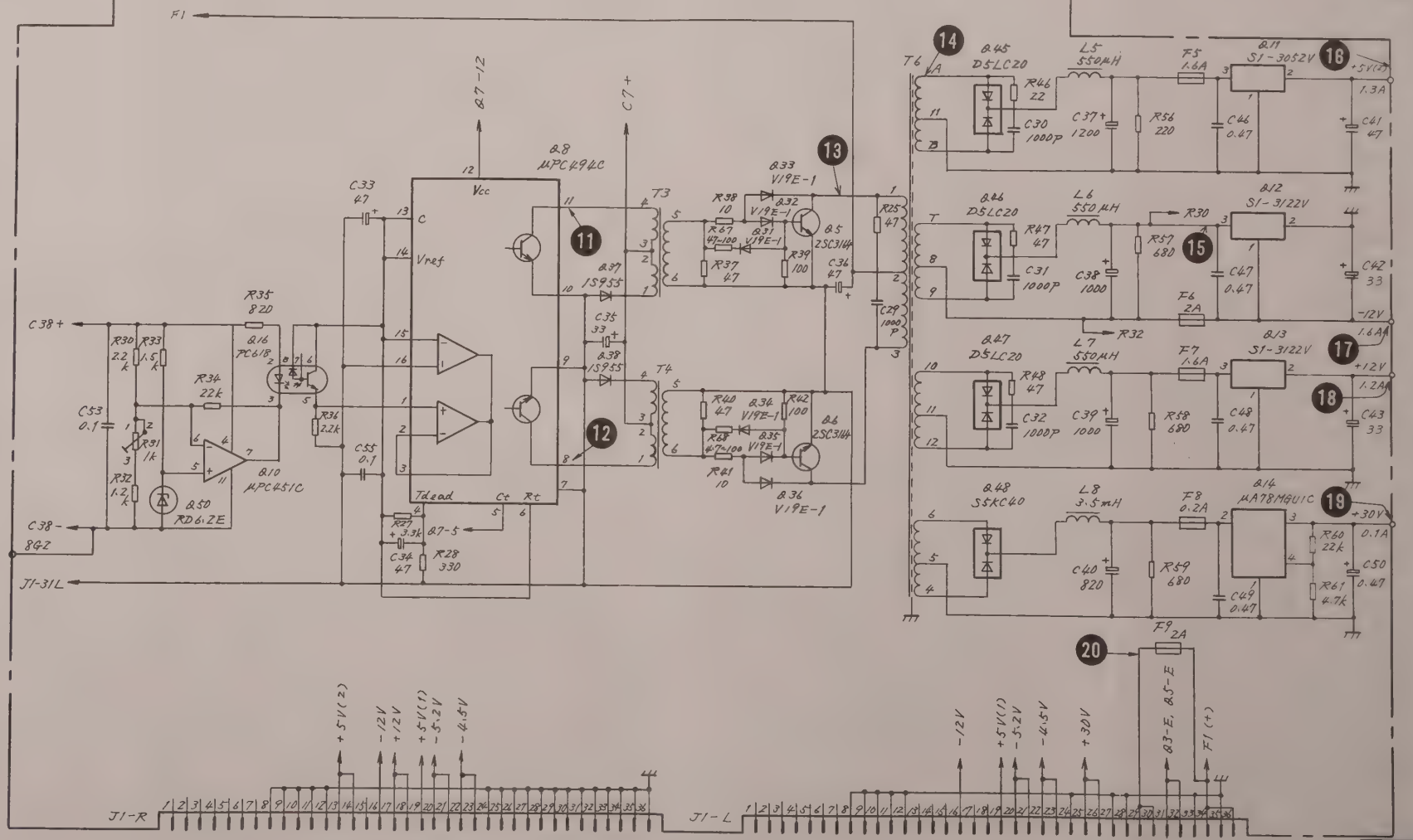

QTY	ITEM	PART No.	DESCRIPTION	MATERIAL	FINISH

24

CHECKED BY	TRACED BY	SCALE	
APPROVED BY	DRAWN BY	:	

TITLE T-Z6 POWER SUPPLY Circuit Diagram.

DRAWING No. 43W33419 2/2

DEP

ANRITSU CORP.

3-35/3-36

3.5.3 T-Z1 Synthesizer section 2 (3 to 19)

(1) Circuit description

The Synthesizer section (Z1) generates a 1 to 700 MHz clock signal in 1 kHz steps by the synthesizer system. Figure 3-16 shows the block diagram.

The Synthesizer section (Z1) consists of two units: U1 unit and U2 unit.

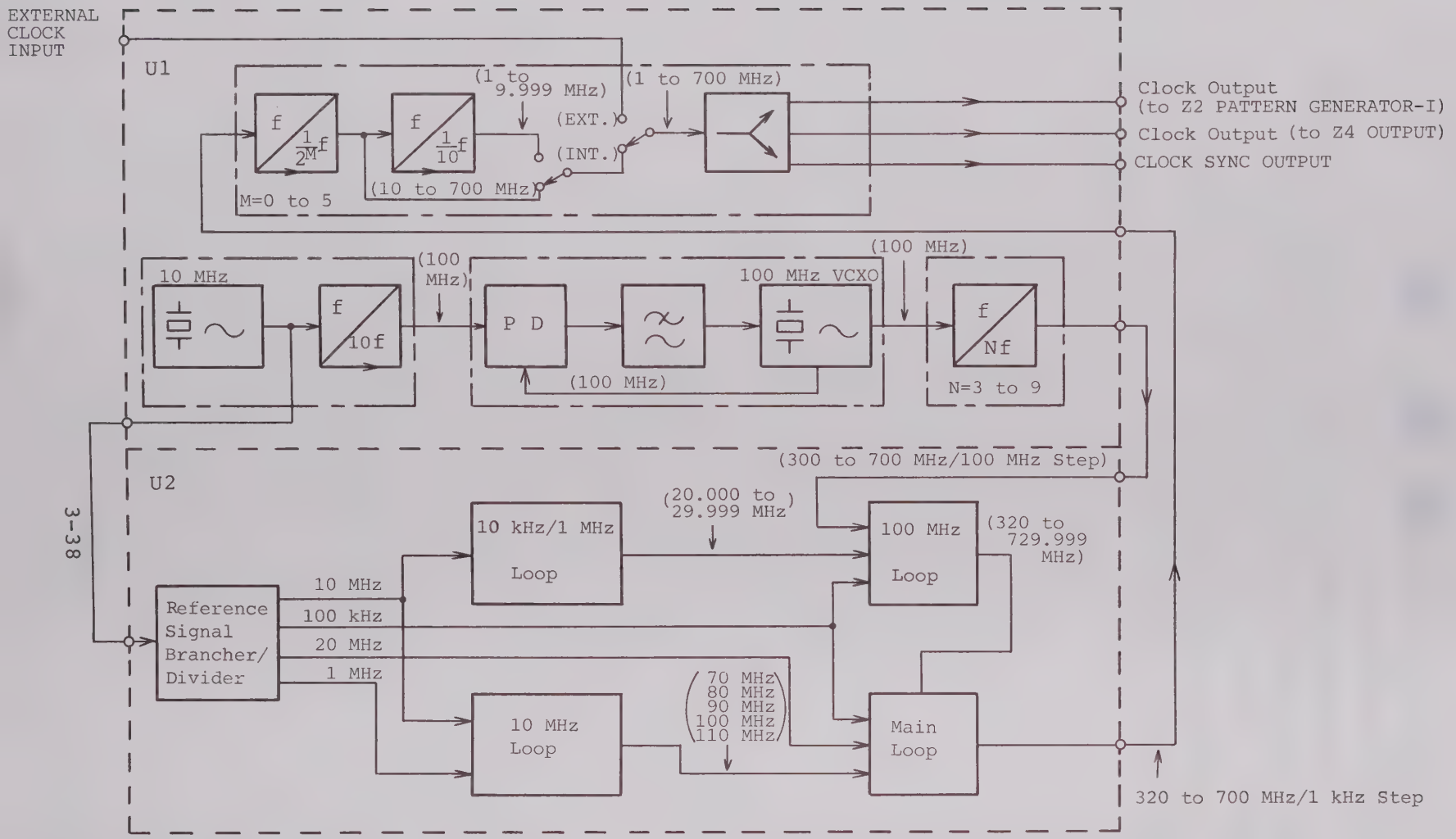

Fig. 3-16 Transmitter Synthesizer Section T-Z1 Block Diagram

The U1 unit consists of 10 MHz (U1-Z1), 100 MHz (U1-Z2), 100 MHz X N (U1-Z3), and OUTPUT DIVIDER (U1-Z4). It generates 10 MHz and 100 MHz X N signals (300, 400, ..., and 700 MHz) having good signal purity and accurate and stable frequencies which become the synthesizer reference signal. The 1 to 700 MHz signals are generated from the 320 to 700 MHz synthesized signals sent from the U2 unit by a direct or dividing method.

Furthermore, the internal synthesized signal or the signal supplied from the outside is selected and made the output clock signal. The output signal is branched to PATTERN GENERATOR-I (T-Z2) clock, OUTPUT (T-Z4) clock, and CLOCK SYNC OUTPUT and supplied to each circuit.

The U2 unit consists of the reference signal brancher/divider, 10 kHz/1 MHz loop, 100 MHz loop, 10 MHz loop, and main loop sections. The 10 MHz reference signal and 100 MHz X N signals sent from the U1 unit are applied to the U2 unit. The reference signal brancher branches the 10 MHz input signal and generates the reference signals used by the PLL circuits.

The 10 kHz/1 MHz loop is a PLL circuit that generates the signal for synthesizing the frequency corresponding to the lower 4 digits of the 1 kHz to 1 MHz range of the transmitter output frequency.

Its output frequencies are 20.000 to 29.999 MHz. The 20.000 to 29.999 MHz (1 kHz steps) signals sent from the 10 kHz/1 MHz loop and the 300 to 700 MHz (100 MHz steps) signals corresponding to the 100 MHz digit of the transmitter output frequency are applied to the 100 MHz loop. This loop frequency-synthesizes both signals and generates a 320 to 729.999 MHz signal.

The 10 MHz loop generates the 70 to 120 MHz (10 MHz steps) signals for synthesizing the 10 MHz digit of the transmitter frequency by the 10 MHz sent from the reference signal brancher section.

The 10 MHz and 100 MHz loop output signals and the 20 MHz signal sent from the reference signal brancher section are input to the main loop. The main loop synthesizes these signals to obtain the frequency from 320 to 700 MHz in 1 kHz steps. Each circuit is described below.

(a) 10 MHz (U1-Z1)

This circuit generates the reference signals by means of a 10 MHz crystal oscillator. This 10 MHz signal is branched into two signal routes.

One signal route goes to the U2 unit. The other signal route is made into a 100 MHz signal by a X 10 multiplier and is sent to 100 MHz (U1-Z2).

(b) 100 MHz (U1-Z2)

This circuit consists of a phase detector (PD), low-pass filter, and 100 MHz VCXO and makes up the PLL circuit.

The output of the 100 MHz VCXO has the same accurate and stable frequency performance as that of the input reference signal and is a low-spurious, high purity signal.

(c) 100 MHz X N (U1-Z3)

This circuit extracts the signals (300, 400, ..., and 700 MHz) needed to synthesize the set frequency from the higher harmonics of 100 MHz (U1-Z2) described in (b) above and sends them to the U2 unit.

(d) OUTPUT DIVIDER (U1-Z4)

This circuit receives the 320 to 700 MHz (in 1 kHz steps) synthesized signal generated by the U2 unit. When the set frequency is 320 to 700 MHz, the input signal is not divided but is output directly. When the set frequency is 10 to 319.999 MHz, the input signal is divided by $1/2^M$ (M=1 to 5) and output. When the set frequency is 1 to 9.999 MHz, the input signal is divided by $1/2^M$ (M=2 to 5) and 1/10 and output. When the clock is set to INTERNAL (VARIABLE or MEMORY), a 1 to 700 MHz synthesized signal is obtained by the method described above.

When the ME522A is operated by an external system clock or SG clock signal, the external clock signal is applied to the ME522A and the clock being used is switched to the external clock signal from the internal synthesized clock signal described previously.

The internal or external clock signal is branched into three routes by a brancher and supplied to the ME522A transmitter mainframe as the pattern generation clock, output clock, and CLOCK SYNC OUTPUT.

(e) U1 SIGNAL SUPPLY (U1-Z5)

This circuit receives the control signals and dc power supplies from the ME522A transmitter mainframe and sends them to the circuits in the U1 unit and the U2 SIGNAL SUPPLY (U2-Z17).

(f) Reference signal brancher and divider section (U2-Z6, U2-Z11)

This circuit consists of the REFERENCE SIGNAL BRANCHER (U2-Z6) and 10 MHz/20 MHz DOUBLER (U2-Z11).

The REFERENCE SIGNAL BRANCHER (U2-Z6) receives and branches the 10 MHz signal sent from U1 and outputs 1 MHz and 100 kHz signals, obtained by dividing the 10 MHz signal, and a 10 MHz signal, that is the same as the input signal.

The 10 MHz/20 MHz DOUBLER (U2-Z11) produces a 20 MHz signal by doubling the 10 MHz signal sent from the REFERENCE SIGNAL BRANCHER (U2-Z6). The reference signals produced by these circuits are applied to the phase locked loops.

(g) 10 kHz/1 MHz LOOP (U2-Z7)

This section consists of two PLL circuits: 10 kHz and 1 MHz loops. The 10 kHz loop generates the signal for synthesizing the lower 2 digits of the 1 kHz and 10 kHz digits of the transmitter output frequency from the input 10 MHz reference signal. Its output frequency is 20.0 to 29.9 MHz.

The 1 MHz loop receives the 10 kHz loop output signal and the 10 MHz reference signal and generates the signal for synthesizing the 100 kHz and 1 MHz digits of the transmitter output frequency following the 1 kHz and 10 kHz digits produced by the 10 kHz loop. Its output frequency is 20.000 to 29.999 MHz.

(h) 100 MHz loop section (U2-Z8, U2-Z9)

This circuit consists of 100 MHz LOOP (U2-Z8) and 100 MHz VCO (U2-Z9) which make up the PLL circuit.

Any signal between 20.000 to 29.999 MHz from the 10 kHz/1 MHz LOOP (U2-Z7) and the 100 MHz × N signal from the U1 unit are input to the 100 MHz LOOP (U2-Z8). Adding these signals to the signal for synthesizing the lower 4 digits of the transmitter output frequency generated by the 10 kHz and 1 MHz loops, both the 100 MHz LOOP (U2-Z8) and 100 MHz VCO (U2-Z9) generate the signal for synthesizing the 100 MHz digit of the transmitter output frequency. The output frequency is (100 × N) + (20 to 29.999) MHz (N = 3 to 7).

(i) 10 MHz LOOP (U2-Z10)

This circuit receives the 10 MHz and 1 MHz signals from the REFERENCE SIGNAL BRANCHER (U2-Z6) and generates the signals for synthesizing the 10 MHz digit of the transmitter output frequency. Those output frequencies are 70 to 110 MHz (in 10 MHz steps).

(j) Main loop section (U1-Z12, U2-Z13, U2-Z14, U2-Z15)

The main loop section consists of the MAIN LOOP (U2-Z12), MAIN VCO (U2-Z13), MAIN-MIX 1 (U2-Z14), and MAIN-MIX 2 (U2-Z15) and makes up the PLL (phase lock loop).

The (100 × N) + (20 to 29.999) MHz signal from the 100 MHz loop section and the 320.000 to 700.000 MHz signal output from the MAIN-VCO (U2-Z13) at this section are input to MAIN-MIX 1 (U2-Z14) and mixed. The 50 to 130 MHz frequency difference signal is obtained at the output.

The 50 to 130 MHz output of MAIN-MIX 1 (U2-Z14) and the output from the 10 MHz LOOP (U2-Z10) are input to MAIN-MIX 2 (U2-Z15). The output from the 10 MHz LOOP (U2-Z10) is set to 20 MHz higher or lower than the output frequency of MAIN-MIX 1 (U2-Z14). Both signals are mixed by MAIN-MIX 2 and the frequency difference signal of 20 MHz is obtained. The MAIN LOOP (U2-Z12) receives the 20 MHz output from the 10 MHz/20 MHz DOUBLER (U2-Z11) of the reference signal brancher/divider section and the 20 MHz signal output from MAIN-MIX 2 (U2-Z15) and phase detects both 20 MHz signals, and amplifies the detected signals.

The frequency of the MAIN VCO (U2-Z13) is controlled by the MAIN LOOP (U2-Z12) output phase detected signal, and a signal having a frequency resolution of 1 kHz over a frequency range of 320 to 700 MHz is output. The output of this section is sent to the OUTPUT DIVIDER (U1-Z4).

(k) U2 SIGNAL SUPPLY (U2-Z17)

This circuit receives the control signals and dc power supplies from U1 SIGNAL SUPPLY (U1-Z5) and sends them to the circuits in the U2 unit through the U2 MOTHERBOARD (U2-Z16).

(2) Troubleshooting

(a) Internal clock (synthesized clock) troubleshooting.

(i) Flowchart-1 (Isolating the faulty point between U1 and U2 units).

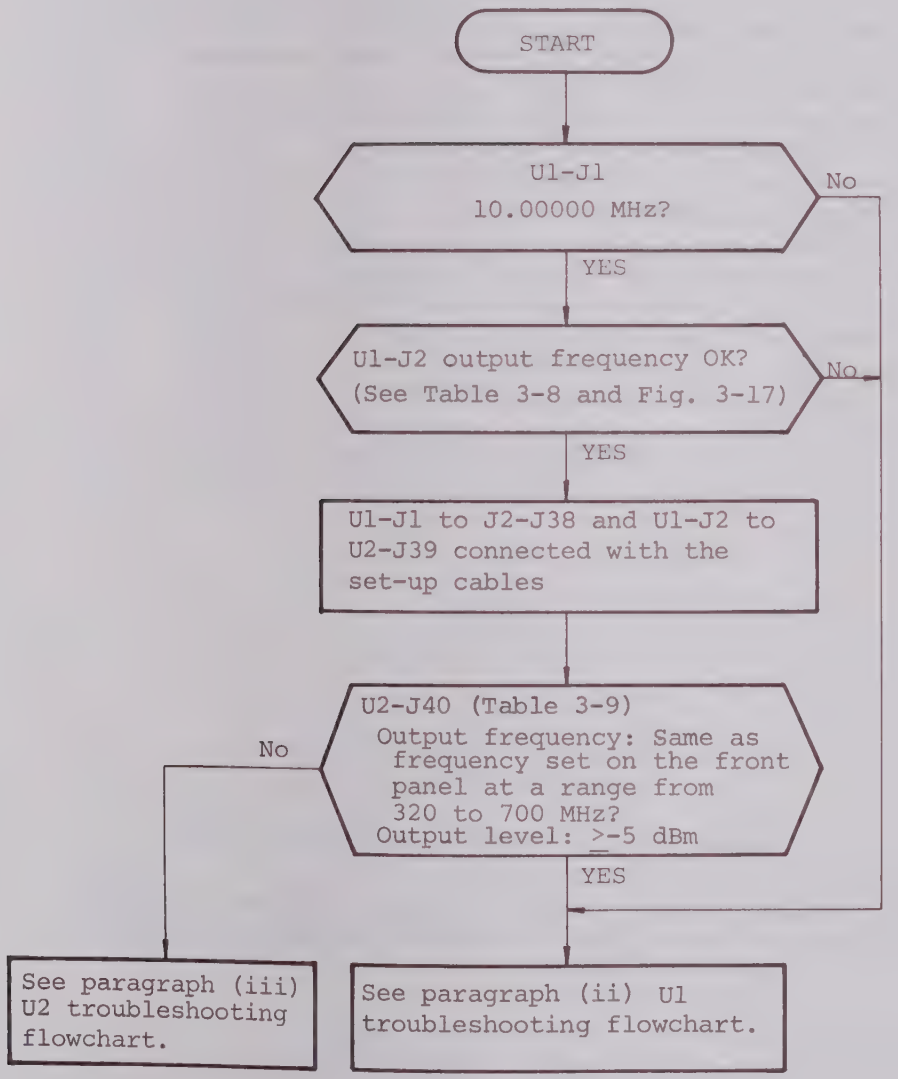

Table 3-8 100 MHz X N Output Frequencies

Clock Frequency set on Front Panel (MHz)	100 MHz X N Output Frequency (MHz)
320.000 to 369.999	400
370.000 to 429.999	300
430.000 to 469.999	500
470.000 to 549.999	400
550.000 to 569.999	600
570.000 to 649.999	500
650.000 to 669.999	700
670.000 to 700.000	600

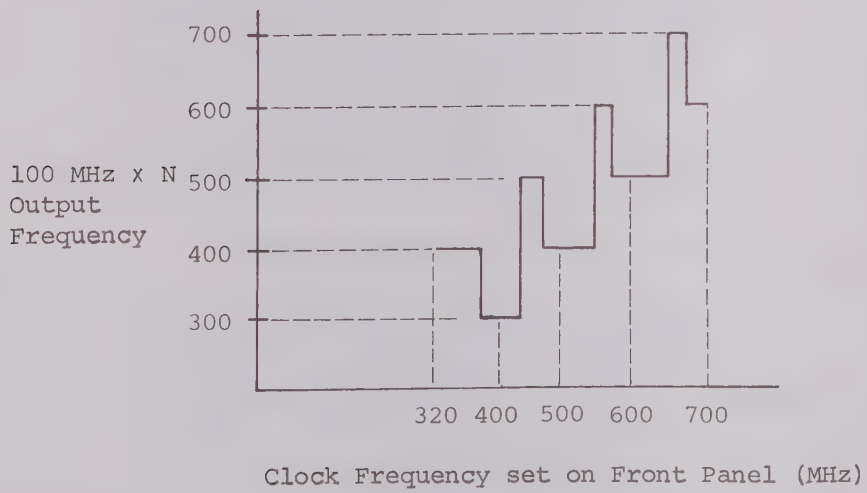

Fig. 3-17 Relationship between Clock Frequency set on Front Panel and 100 MHz X N Output Frequency

Table 3-9 Relationship between Panel Clock Frequency and U2-J40 Output Frequency

Clock Frequency set on Front Panel (MHz)	U1-J40 Output Frequency
320 to 700.000	Same as clock frequency set on front panel
160 to 319.999	Clock frequency set on front panel × 2
80 to 159.999	Clock frequency set on front panel × 4
40 to 79.999	Clock frequency set on front panel × 8
20 to 39.999	Clock frequency set on front panel × 16
10 to 19.999	Clock frequency set on front panel × 32
8 to 9.999	Clock frequency set on front panel × 40
4 to 7.999	Clock frequency set on front panel × 80
2 to 3.999	Clock frequency set on front panel × 160
1 to 1.999	Clock frequency set on front panel × 320

(ii) Flowchart-2 (U1 troubleshooting)

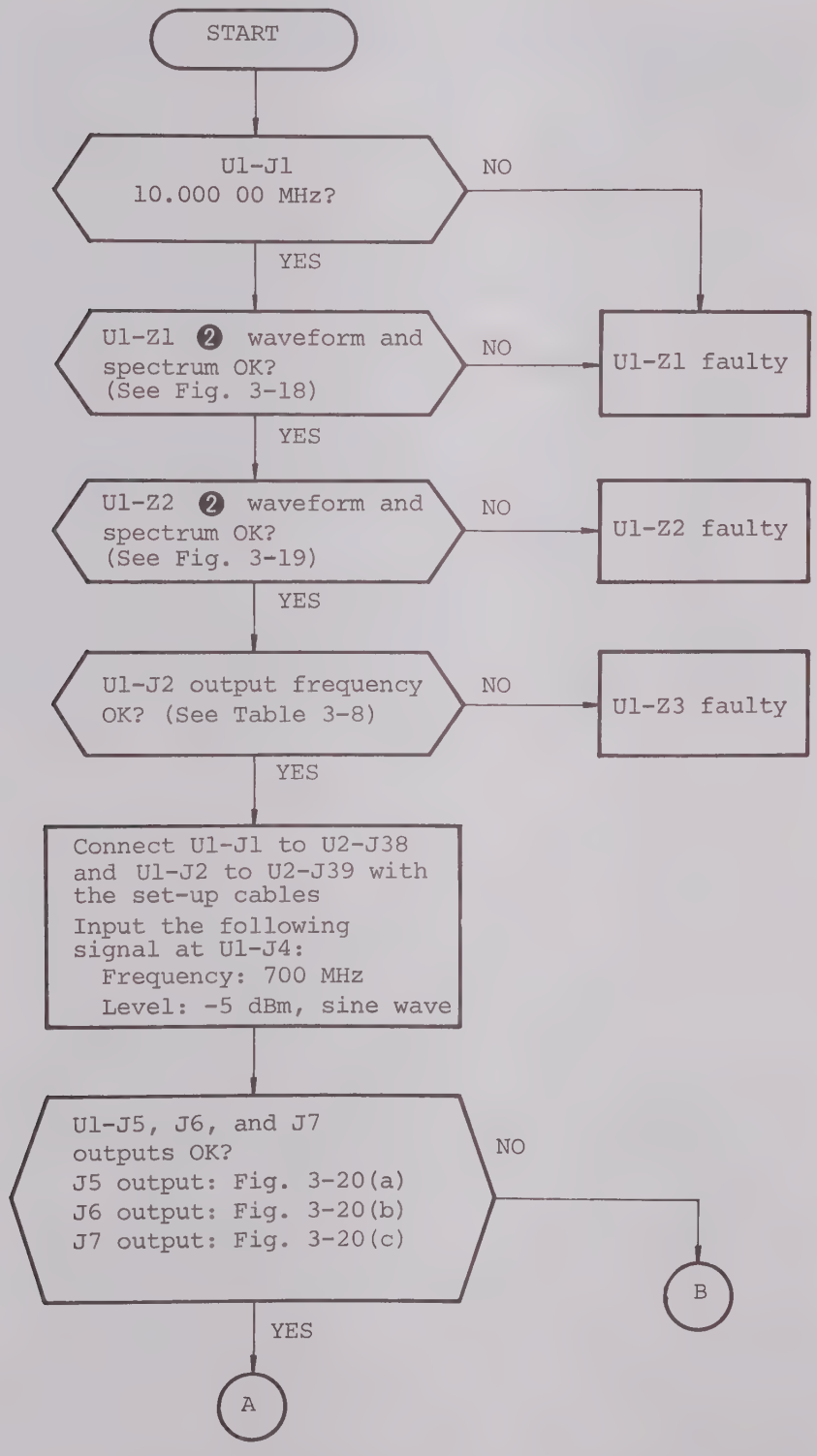

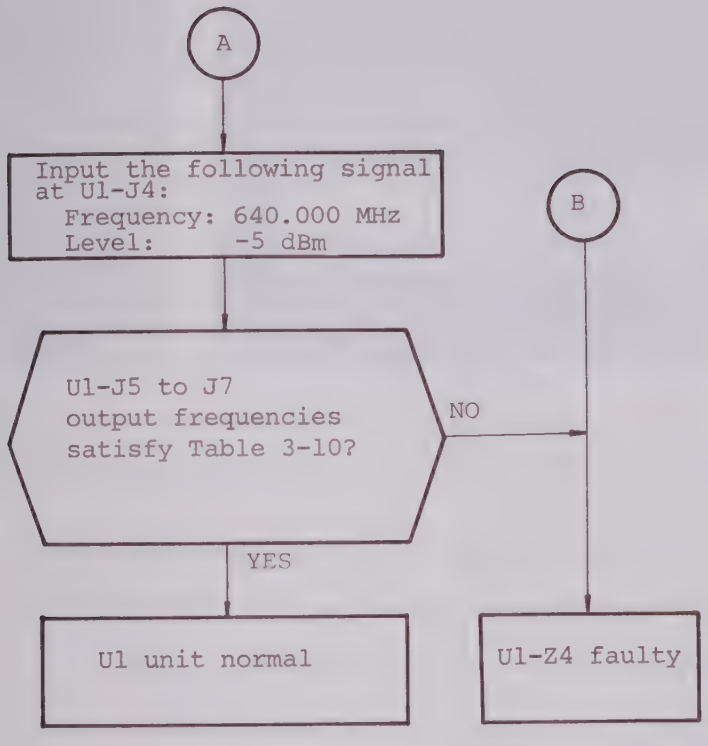
A
Input the following signal at U1-J4:
Frequency: 640.000 MHz
Level: -5 dBm
B
U1-J5 to J7 output frequencies satisfy Table 3-10?
NO
YES
U1 unit normal
U1-Z4 faulty

Table 3-10 U1-J5 to J7 Output Frequencies

Note: 640.000 MHz input at U1-J1

Frequency set on Front Panel (MHz)	U1-J5 to J7 Output Frequencies (MHz)
640.000	640.000
320.000	640.000
160.000	320.000
80.000	160.000
40.000	80.000
20.000	40.000
10.000	20.000
8.000	16.000
4.000	8.000
2.000	4.000
1.000	2.000

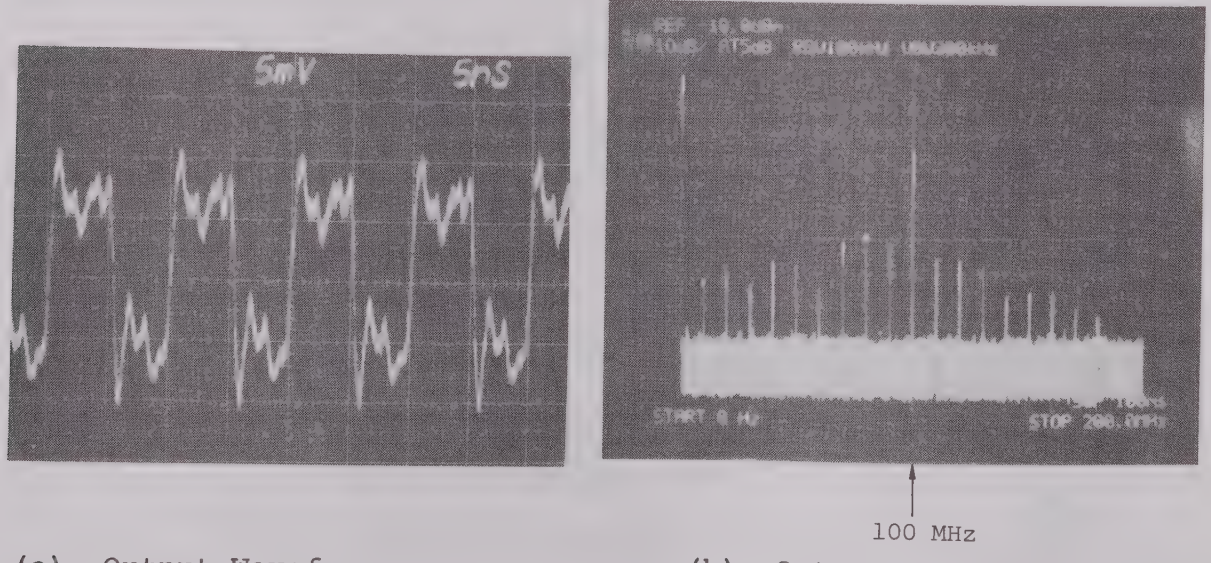

(a) Output Waveform (by sampling oscilloscope)

(b) Output Spectrum

Fig. 3-18 U1-Z1 (10 MHz, U1-Z1) ❷ Output Waveform and Spectrum

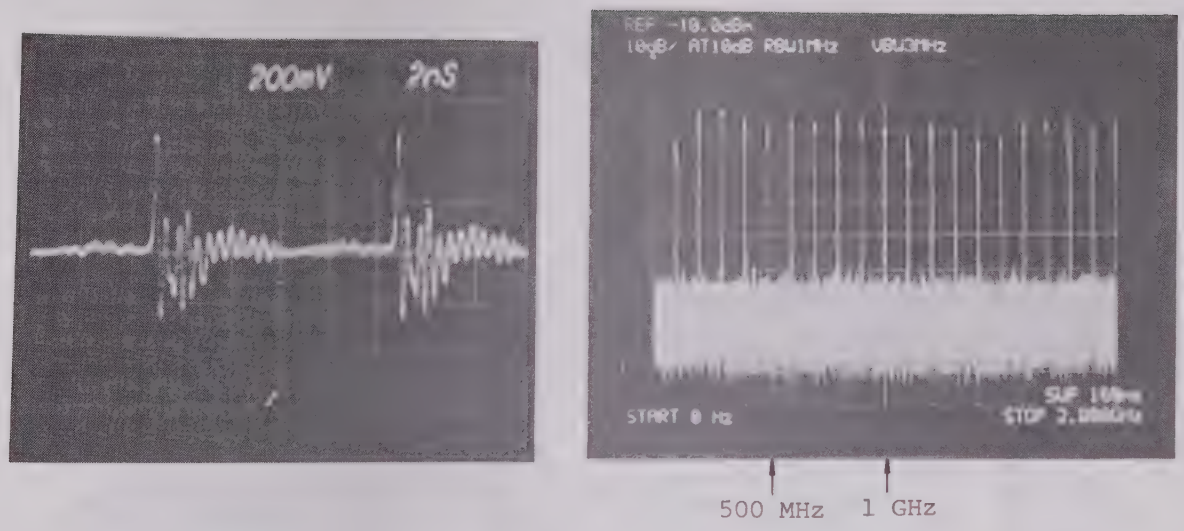

(a) Output Waveform (b) Output Spectrum

Fig. 3-19 U1-Z2 (100 MHz, U1-Z2) ❷ Output Waveform and Spectrum

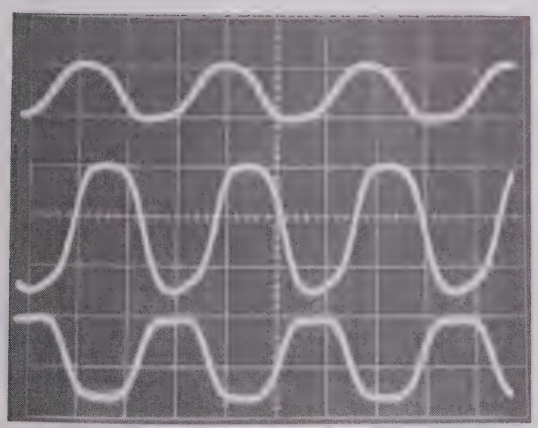

70 MHz, V: 0.5 V/div
H: 500 ps/div

Fig. 3-20 U1-J5 to J7 Output Waveforms

(iii) Flowchart-3 (U2 troubleshooting)

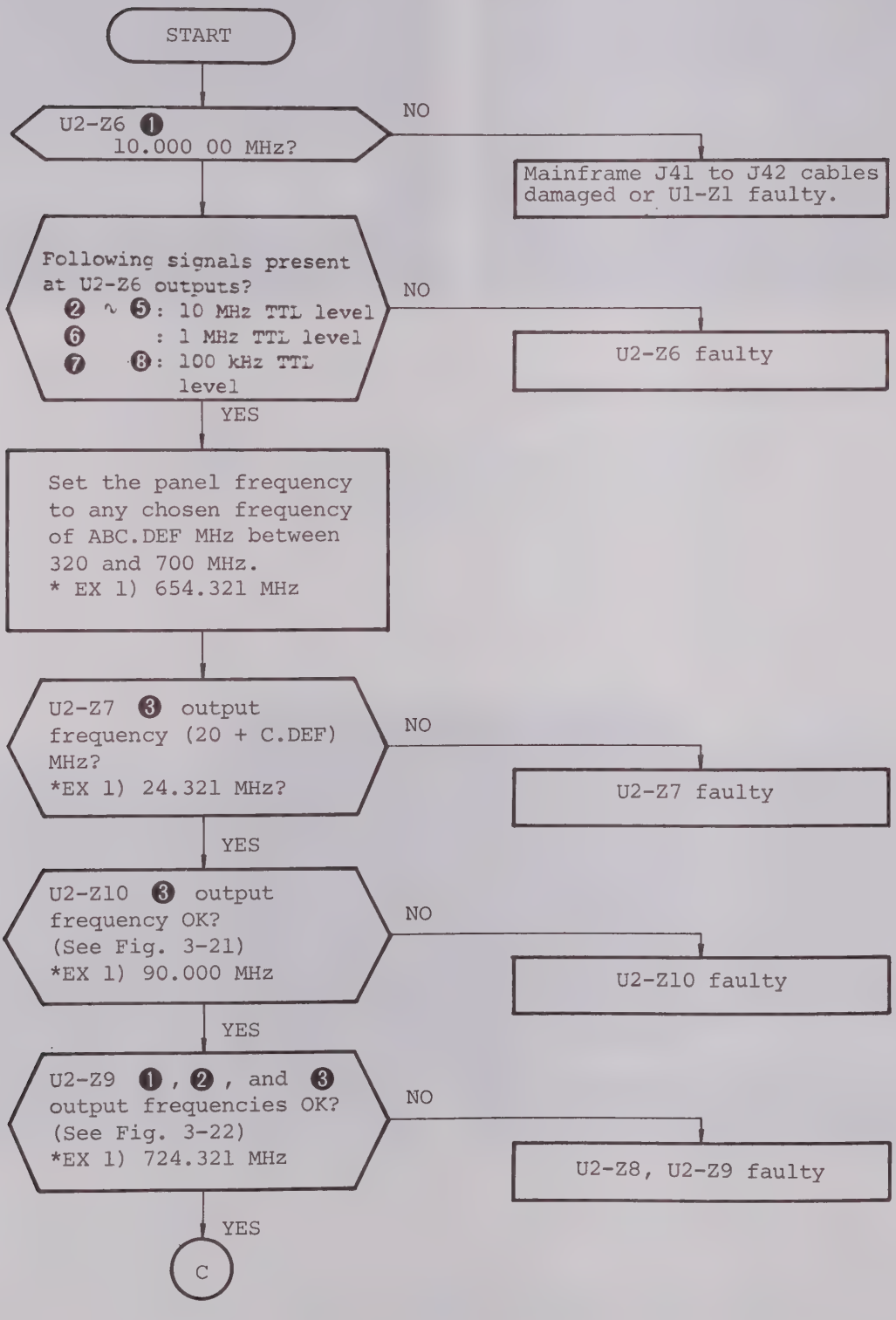

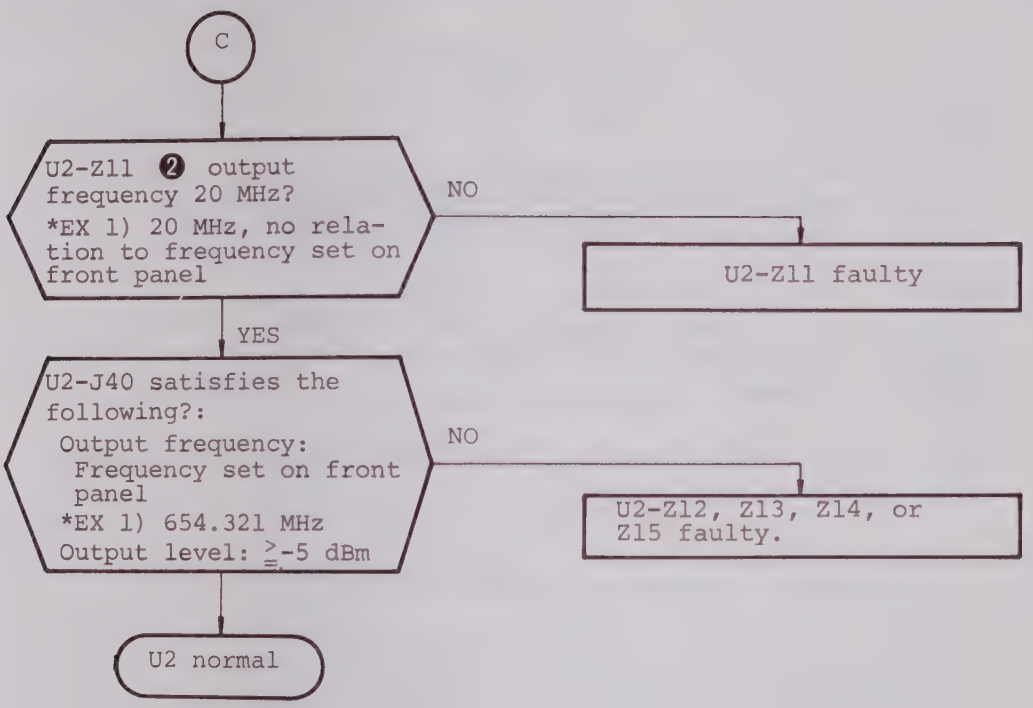
C
U2-Z11 ❷ output frequency 20 MHz?
*EX 1) 20 MHz, no relation to frequency set on front panel
NO
U2-Z11 faulty
YES
U2-J40 satisfies the following?:
Output frequency:
Frequency set on front panel
*EX 1) 654.321 MHz
Output level: ≧-5 dBm
NO
U2-Z12, Z13, Z14, or Z15 faulty.
U2 normal

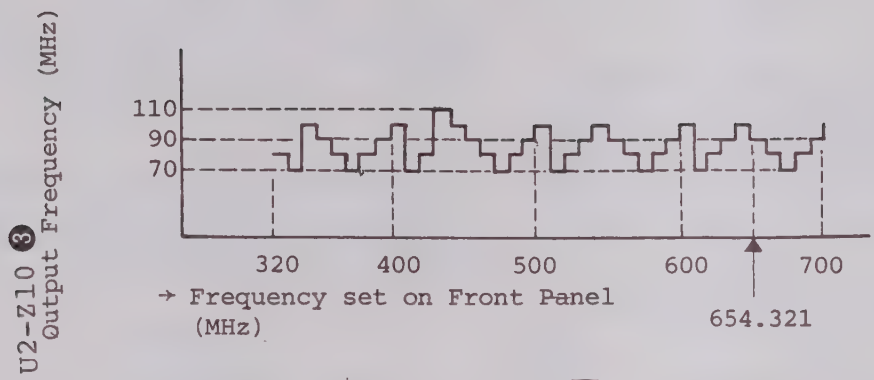

Fig. 3-21 U2-Z10 (10 MHz VCO) ❸ Output Frequency

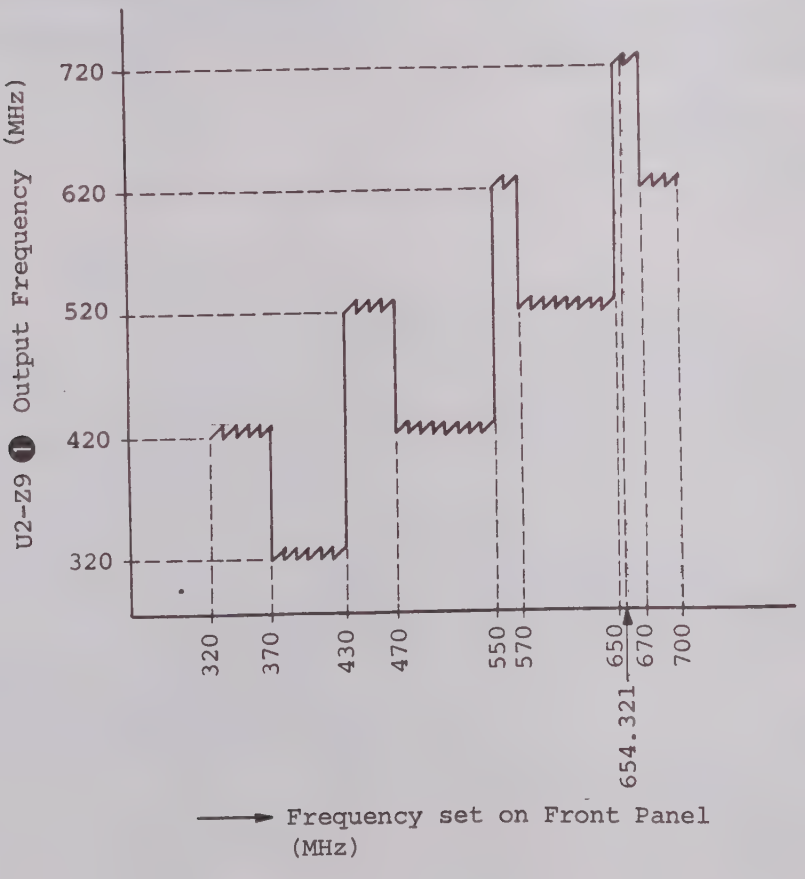

Fig. 3-22 U2-Z9 (MAIN VCO) ❶ Output Frequency

(b) External clock troubleshooting

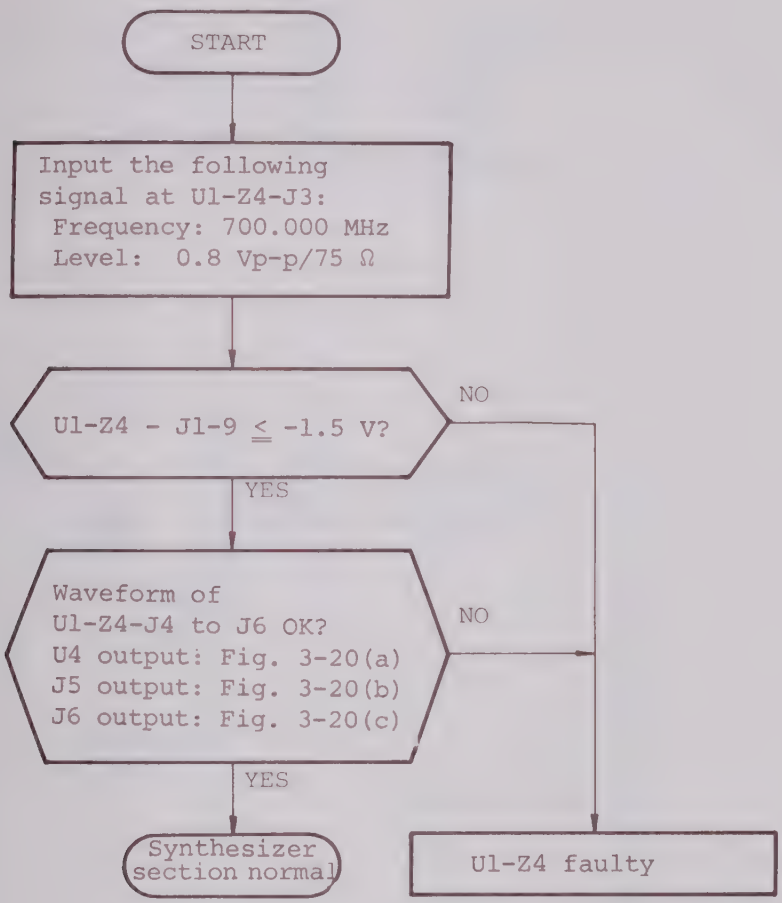

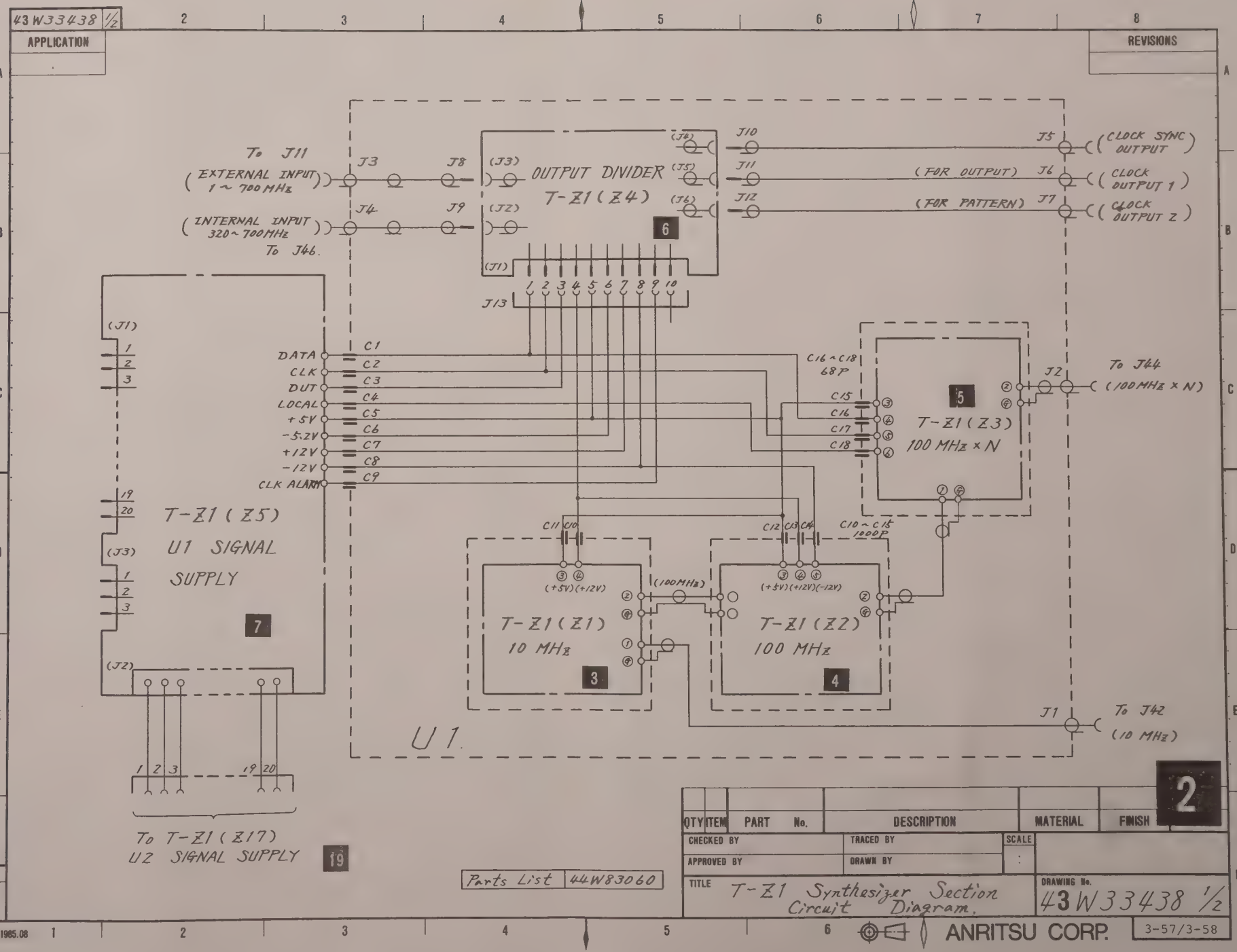
43W33438 1/2
APPLICATION
REVISIONS
To J11
(EXTERNAL INPUT 1 ~ 700 MHz)
(INTERNAL INPUT 320 ~ 700 MHz)
To J46.
J3
J4
J8
J9
(J3)
(J2)
OUTPUT DIVIDER
T-Z1 (Z4)
6
(J4)
(J5)
(J6)
J10
J11
J12
J5
J6
J7
(CLOCK SYNC OUTPUT)
(FOR OUTPUT)
(CLOCK OUTPUT 1)
(FOR PATTERN)
(CLOCK OUTPUT 2)
(J1)
J13
1 2 3 4 5 6 7 8 9 10
(J1)
DATA
CLK
DUT
LOCAL
+5V
-5.2V
+12V
-12V
CLK ALARM
C1
C2
C3
C4
C5
C6
C7
C8
C9
C16 ~ C18
68P
C15
C16
C17
C18
5
T-Z1 (Z3)
100 MHz × N
J2
To J44
(100 MHz × N)
T-Z1 (Z5)
U1 SIGNAL
SUPPLY
7
(J3)
(J2)
C11 C10
C12 C13 C14
C10 ~ C15
1000P
(+5V)(+12V)
(100 MHz)
(+5V)(+12V)(-12V)
T-Z1 (Z1)
10 MHz
3
T-Z1 (Z2)
100 MHz
4
J1
To J42
(10 MHz)
U1.
To T-Z1 (Z17)
U2 SIGNAL SUPPLY
19
Parts List 44W83060
QTY ITEM PART No. DESCRIPTION MATERIAL FINISH
2
CHECKED BY
TRACED BY
SCALE
APPROVED BY
DRAWN BY
TITLE T-Z1 Synthesizer Section Circuit Diagram.
DRAWING No. 43W33438 1/2
DEP
No. 0023-1985.08
ANRITSU CORP.
3-57/3-58

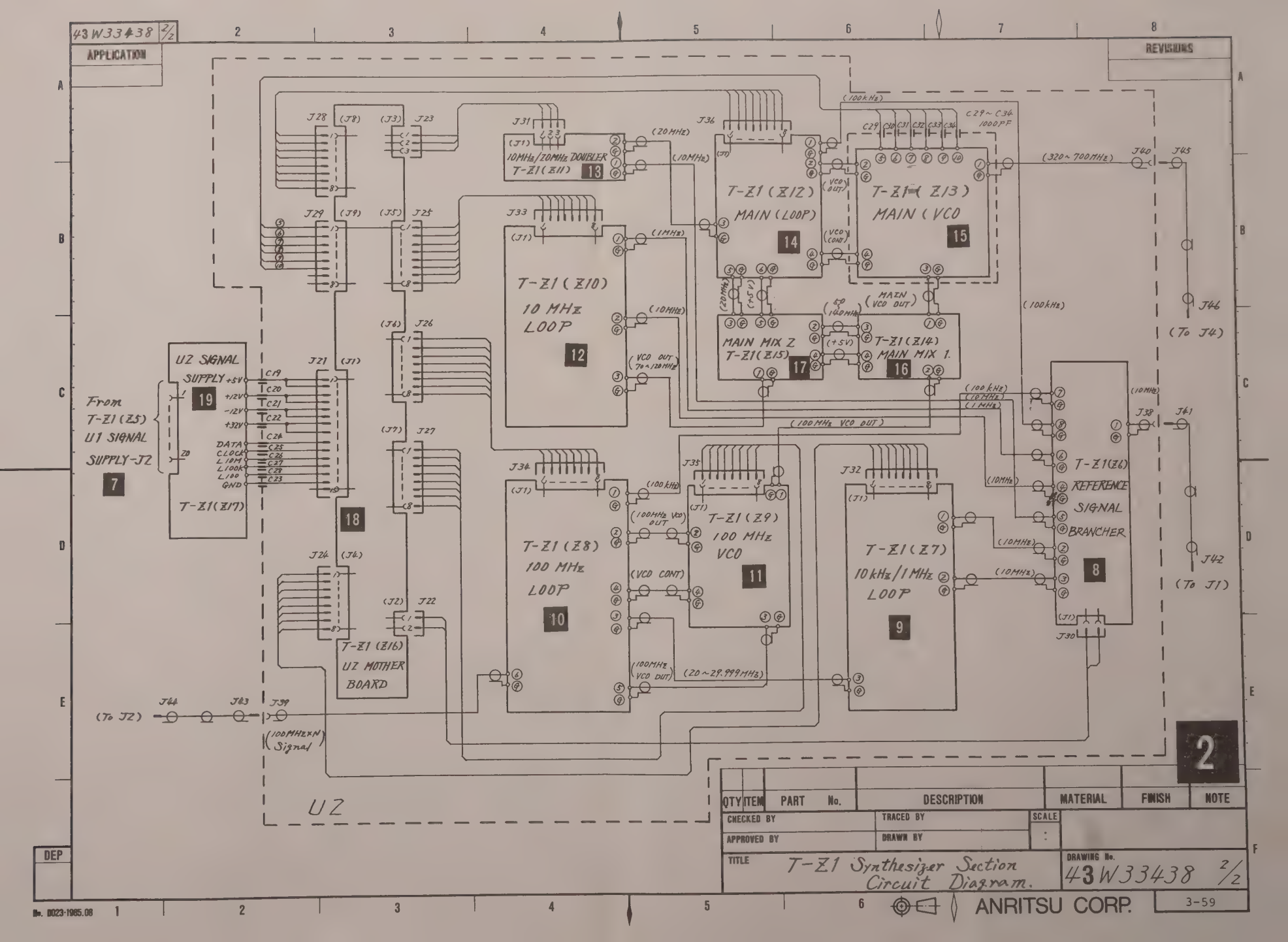
43W33438 2/2
APPLICATION
REVISIONS
T-Z1 (Z12) MAIN (LOOP) 14
T-Z1 (Z13) MAIN (VCO 15
T-Z1 (Z10) 10 MHz LOOP 12
T-Z1 (Z8) 100 MHz LOOP 10
T-Z1 (Z9) 100 MHz VCO 11
T-Z1 (Z7) 10kHz/1MHz LOOP 9
T-Z1 (Z14) MAIN MIX 1. 16
MAIN MIX 2 T-Z1 (Z15) 17
10MHz/20MHz DOUBLER T-Z1 (Z11) 13
T-Z1 (Z6) REFERENCE SIGNAL BRANCHER 8
U2 SIGNAL SUPPLY 19
T-Z1 (Z17)
T-Z1 (Z16) U2 MOTHER BOARD 18
From T-Z1 (Z5) U1 SIGNAL SUPPLY-J2 7
(To J2)
(To J4)
(To J1)
U2
2
QTY ITEM PART No. DESCRIPTION MATERIAL FINISH NOTE
CHECKED BY TRACED BY SCALE
APPROVED BY DRAWN BY
TITLE T-Z1 Synthesizer Section Circuit Diagram.
DRAWING No. 43W33438 2/2
DEP
No. 0023-1985.08
ANRITSU CORP.
3-59

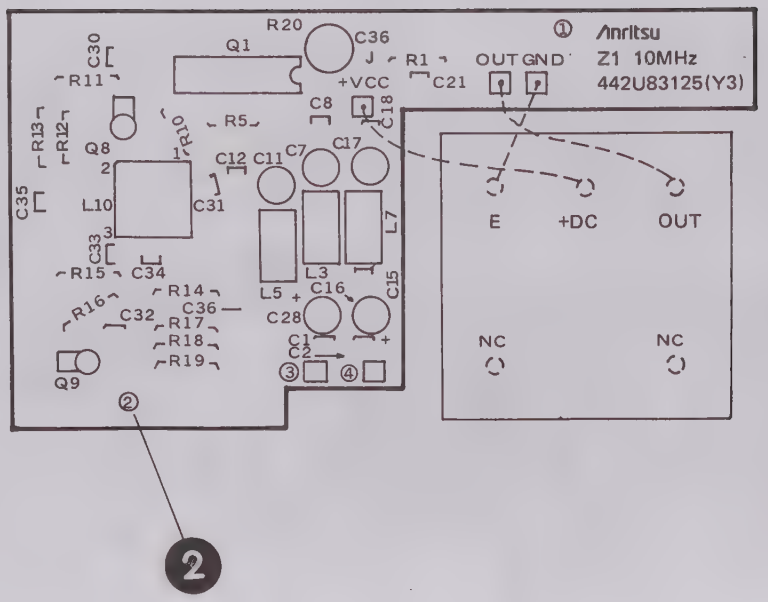

Fig. 3-23 T-Z1 (Z1) 10 MHz PC Board 3 Parts Layout

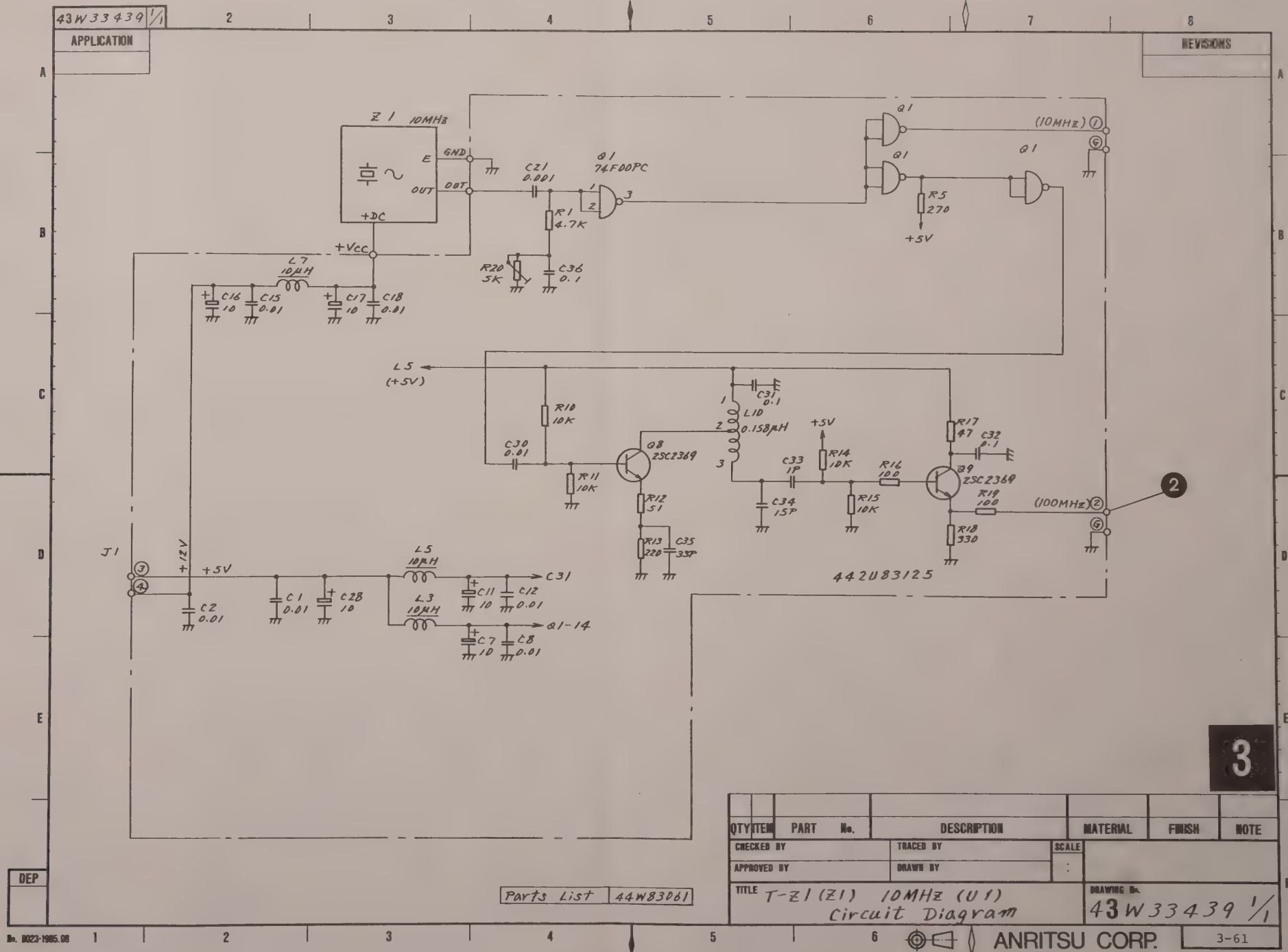
43W33439 1/1
APPLICATION
REVISIONS
Z1 10MHz
GND
OUT
+DC
+Vcc
C21 0.001
Q1 74F00PC
R1 4.7K
R20 5K
C36 0.1
L7 10μH
C16 10
C15 0.01
C17 10
C18 0.01
Q1
(10MHz) 1
R5 270
+5V
L5 (+5V)
R10 10K
C30 0.01
Q8 2SC2389
R11 10K
R12 51
R13 220
C35 33P
C31 0.1
L10 0.158μH
C33 1P
C34 15P
R14 10K
R15 10K
R16 100
Q9 2SC2369
R17 47
C32 0.1
R19 100
(100MHz) 2
R18 330
44U83125
J1
+12V
+5V
C2 0.01
C1 0.01
C28 10
L5 10μH
L3 10μH
C11 10
C12 0.01
C7 10
C8 0.01
C31
Q1-14
3
QTY ITEM PART No. DESCRIPTION MATERIAL FINISH NOTE
CHECKED BY
TRACED BY
SCALE
APPROVED BY
DRAWN BY
TITLE T-Z1(Z1) 10MHz (U1) Circuit Diagram
DRAWING No. 43W33439 1/1
DEP
Parts List 44W83061
ANRITSU CORP.
3-61

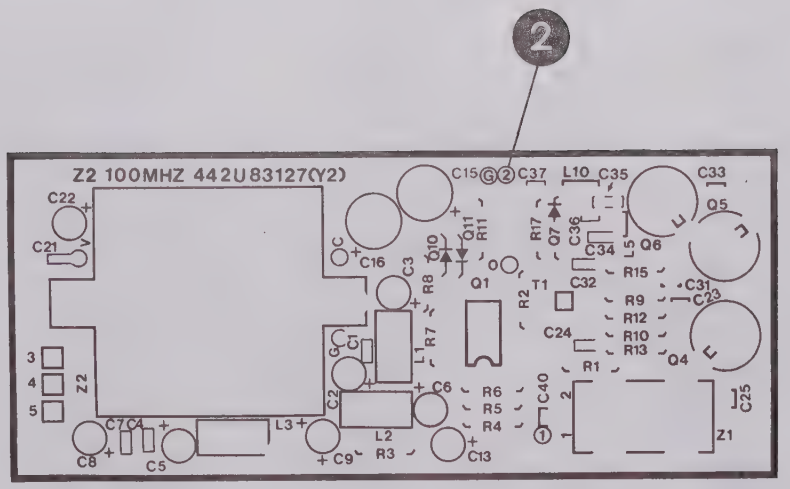

Fig. 3-24 T-Z1 (Z2) 100 MHz PC Board 4 parts Layout

APPLICATION

REVISIONS

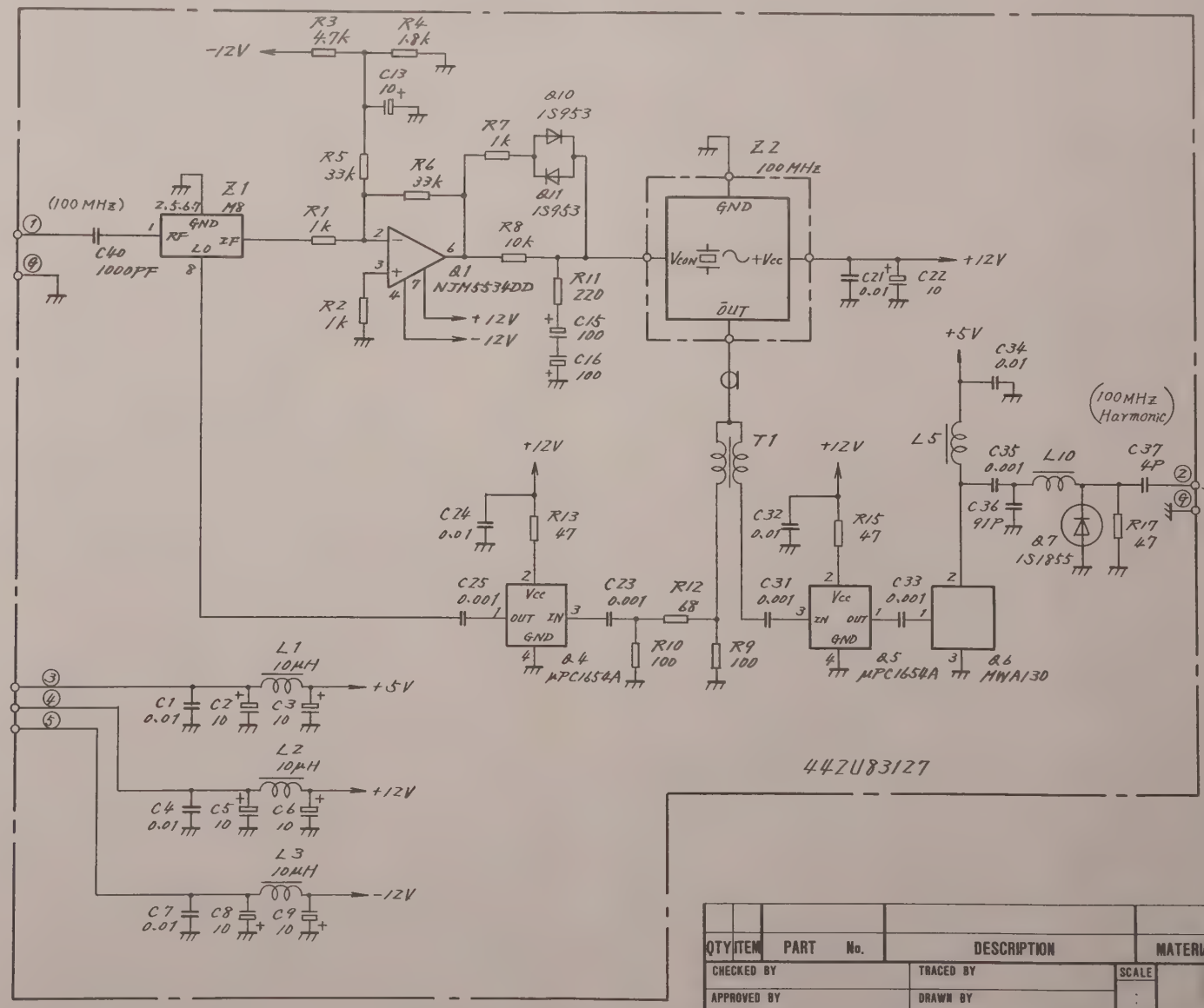

QTY	ITEM	PART No.	DESCRIPTION	MATERIAL	FINISH	NOTE

CHECKED BY	TRACED BY	SCALE	
APPROVED BY	DRAWN BY	:	

TITLE T-Z1(Z2) 100 MHz (U1) Circuit Diagram.

DRAWING No. 43W33440 1/1

Parts List 44W83062

DEP

4

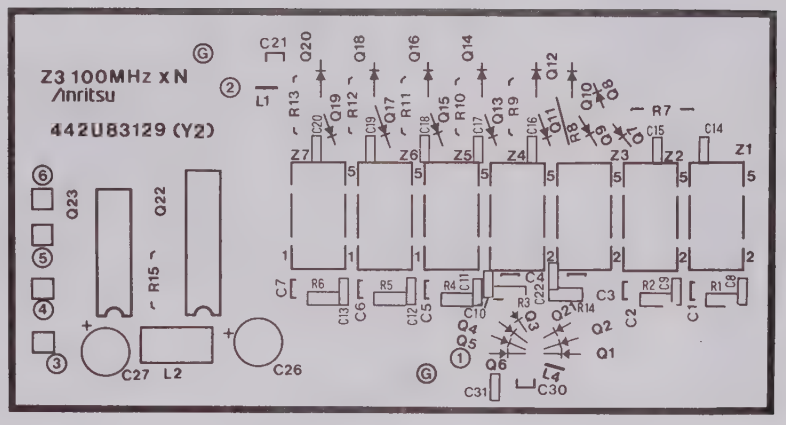

Fig. 3-25 T-Z1 (Z3) 100 MHz X N PC Board 5 Parts Layout

APPLICATION

REVISIONS

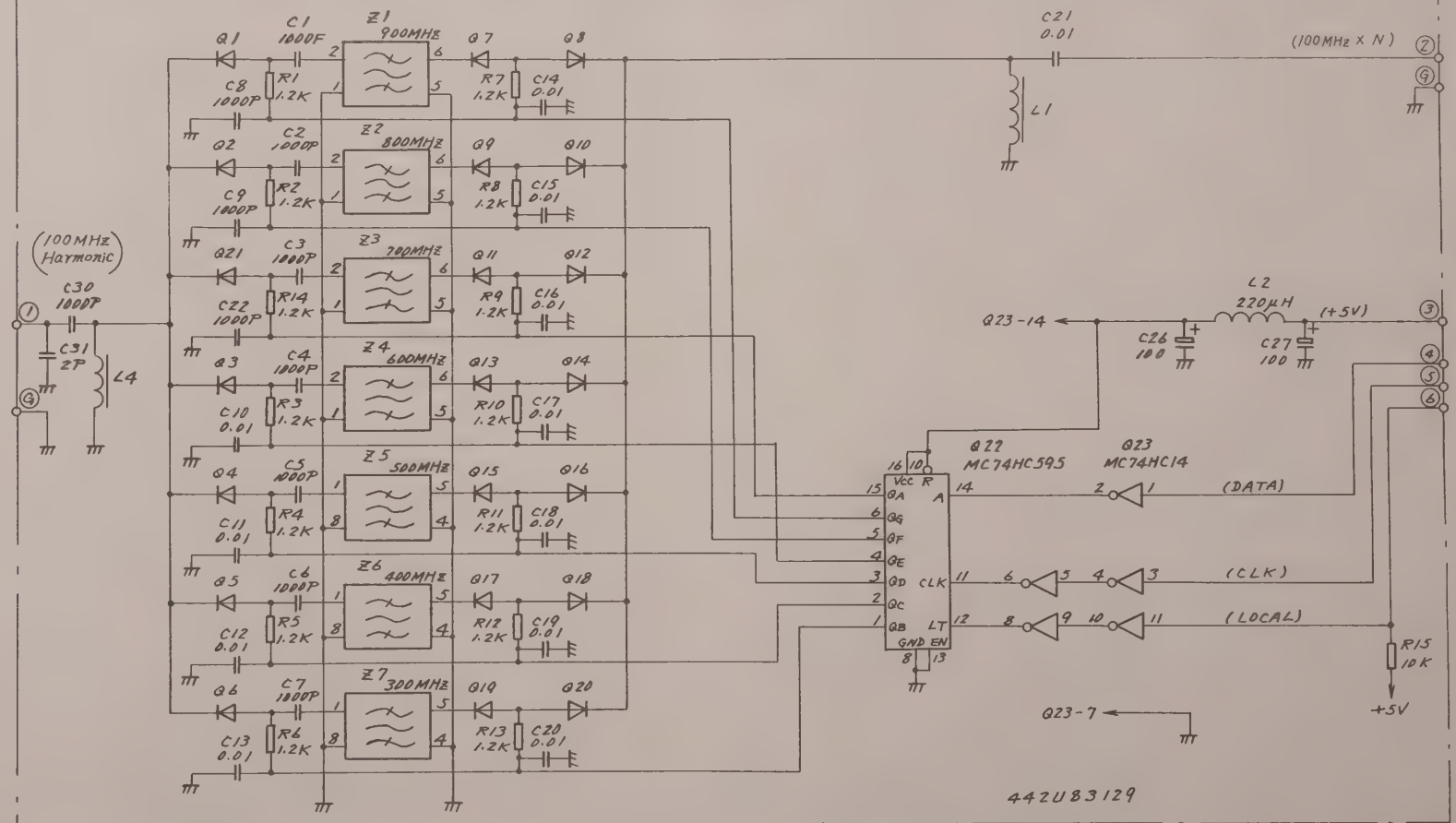

5

QTY	ITEM	PART No.	DESCRIPTION	MATERIAL	FINISH	NOTE

CHECKED BY	TRACED BY	SCALE
APPROVED BY	DRAWN BY	:

TITLE T-Z1(Z3) 100MHz × N (U1) Circuit Diagram

DRAWING No. 43W33441 1/1

Parts List 44NB3063

DEP

ANRITSU CORP.

3-65

No. 0023-1985.08

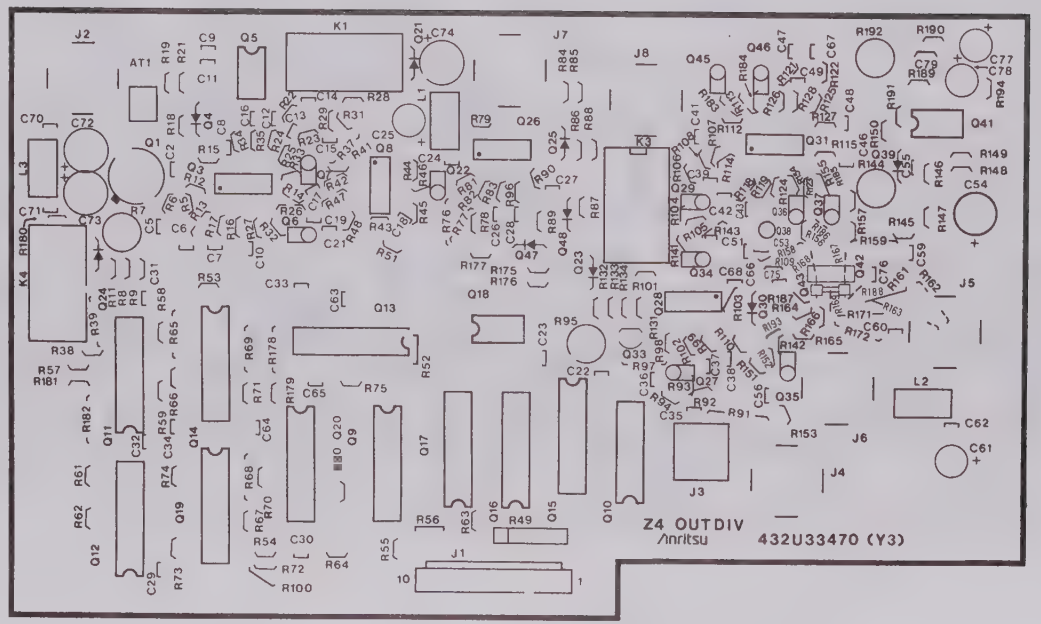

Fig. 3-26 T-Z1 (Z4) OUTPUT DIVIDER PC Board 6 Parts Layout

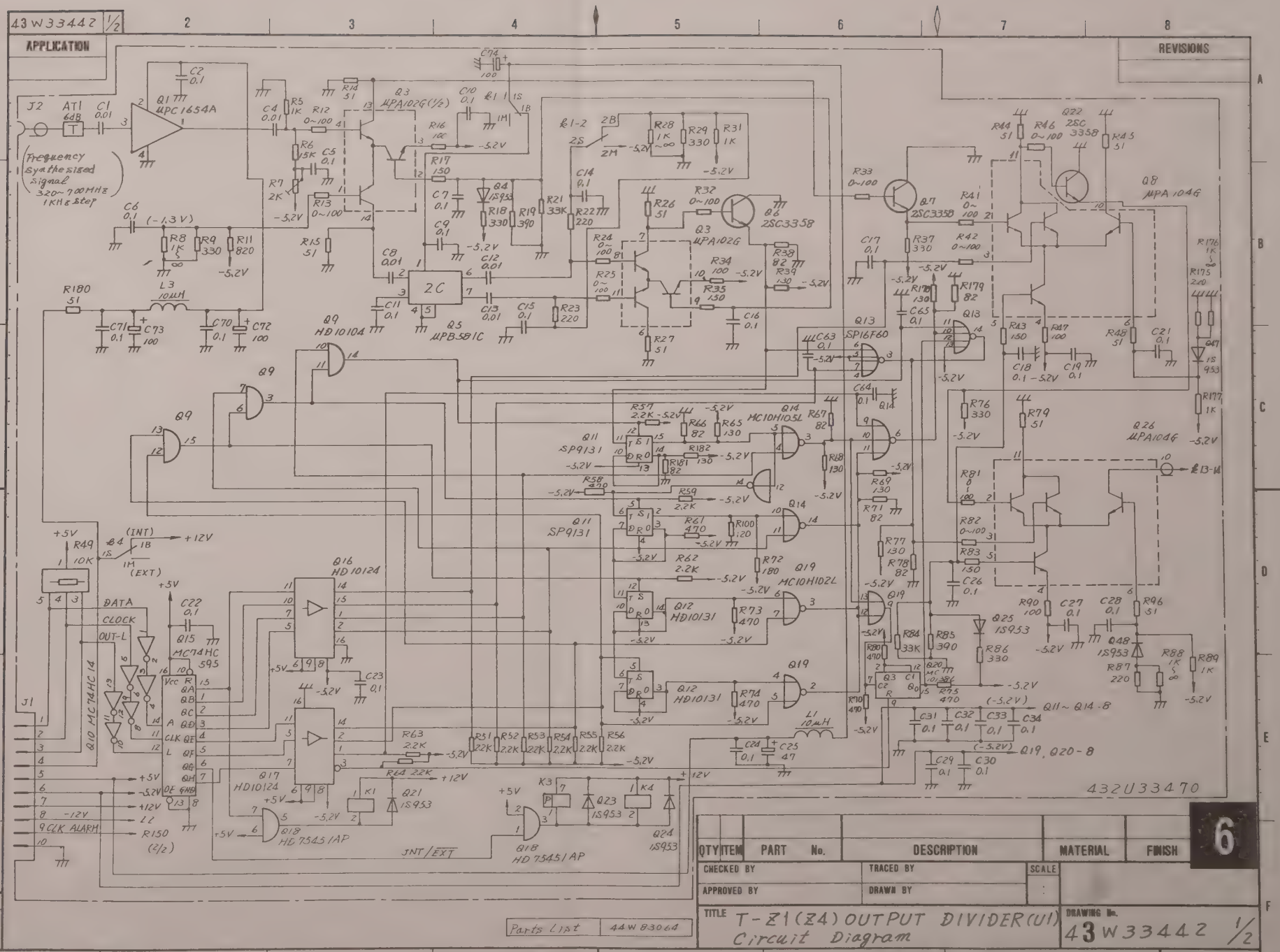
43W33442 1/2
APPLICATION
REVISIONS
Frequency synthesized signal 320~700MHz 1KHz step
Q1 μPC1654A
Q3 μPA102G(1/2)
Q5 μPB581C
Q6 2SC3358
Q7 2SC3358
Q8 μPA104G
Q9 HD10104
Q11 SP9131
Q12 HD10131
Q13 SP16F60
Q14 MC10H105L
Q15 MC74HC595
Q16 HD10124
Q17 HD10124
Q18 HD75451AP
Q19 MC10H102L
Q20 MC10138L
Q21 1S953
Q22 2SC3358
Q23 1S953
Q24 1S953
Q25 1S953
Q26 μPA104G
Q47 1S953
Q48 1S953
Q10 MC74HC14
DATA
CLOCK
OUT-L
CLK ALARM
R150 (2/2)
JNT/EXT
Q11~Q14-8
Q19, Q20-8
432U33470
Parts List 44W83064
QTY ITEM PART No. DESCRIPTION MATERIAL FINISH
6
CHECKED BY
TRACED BY
SCALE
APPROVED BY
DRAWN BY
TITLE T-Z1(Z4) OUTPUT DIVIDER(U1) Circuit Diagram
DRAWING No. 43W33442 1/2
ANRITSU CORP.
3-67/3-68
DEP
No. 0023-1985.08

43W33442 2/2

APPLICATION

REVISIONS

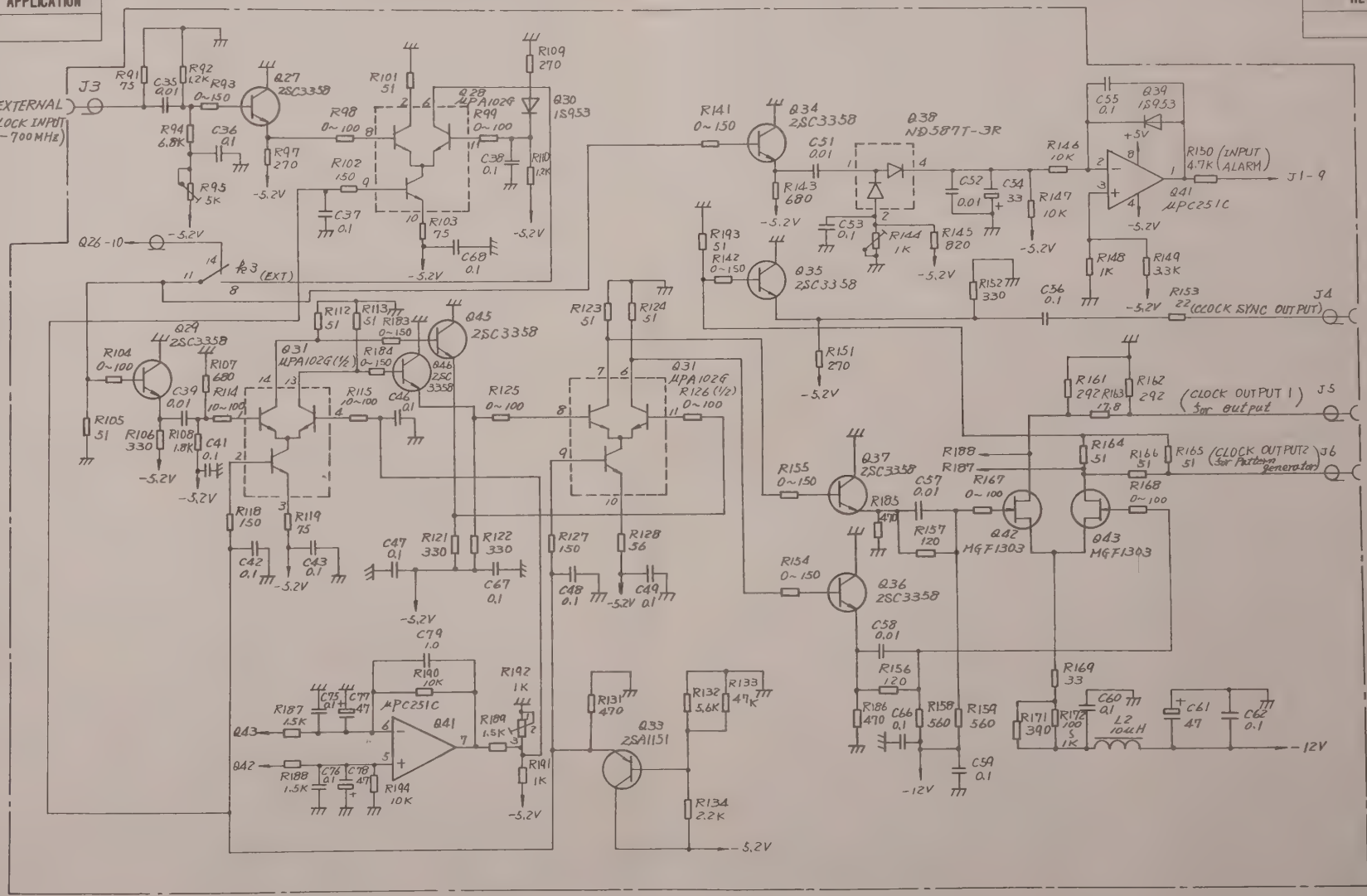

6

QTY	ITEM	PART No.	DESCRIPTION	MATERIAL	FINISH	NOTE

CHECKED BY | TRACED BY | SCALE

APPROVED BY | DRAWN BY

TITLE T-Z1(Z4) OUTPUT DIVIDER (U1) Circuit Diagram

DRAWING No. 43W33442 2/2

DEP

No. 0023-1985.08

ANRITSU CORP.

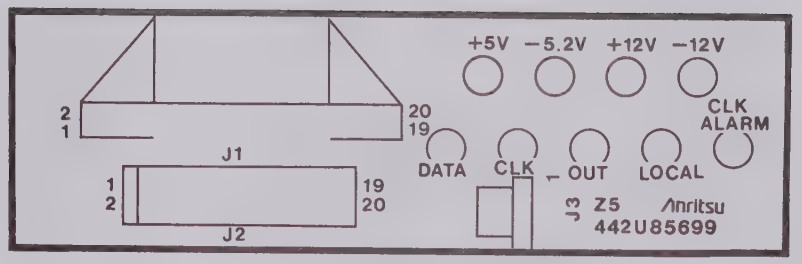

Fig. 3-27 T-Z1 (Z5) U1 SIGNAL SUPPLY PC Board 7 Parts Layout

APPLICATION

REVISIONS

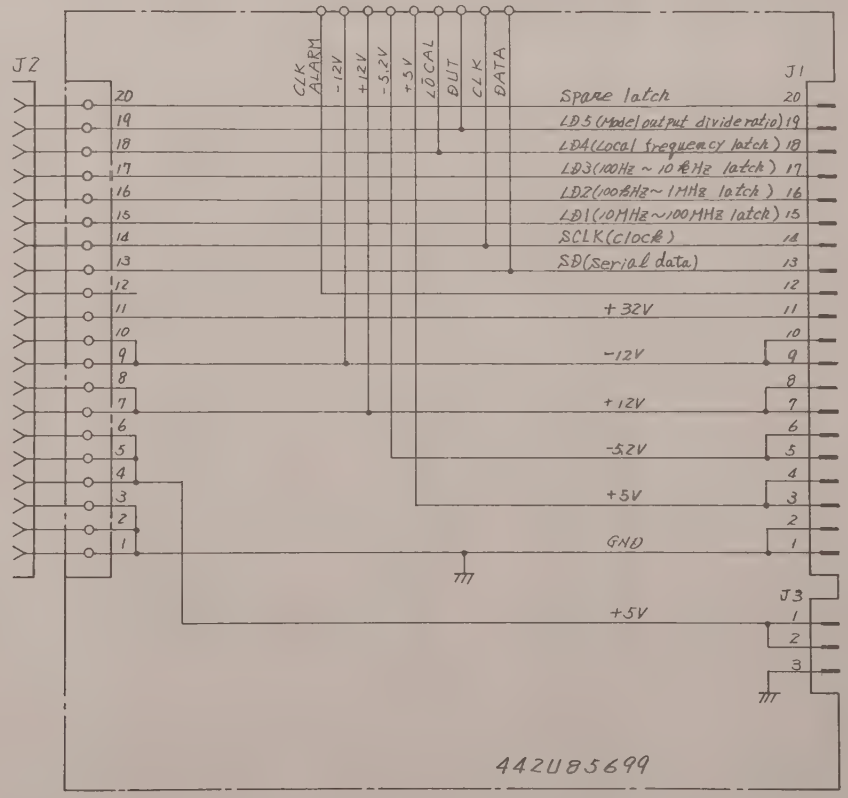

Parts List	44W83065

QTY	ITEM	PART No.	DESCRIPTION	MATERIAL	FINISH	NOTE
CHECKED BY		TRACED BY		SCALE		
APPROVED BY		DRAWN BY		:		

TITLE: T-Z1(Z5) U1 SIGNAL SUPPLY (U1) Circuit Diagram

DRAWING No. 43W33443 1/1

DEP

7

ANRITSU CORP.

3-71

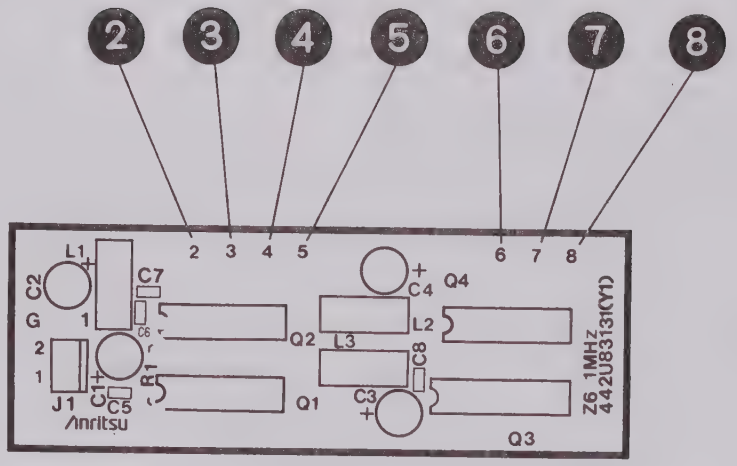

Fig. 3-28 T-Z1 (Z6) REFERENCE SIGNAL BRANCHER PC Board 8 Parts Layout

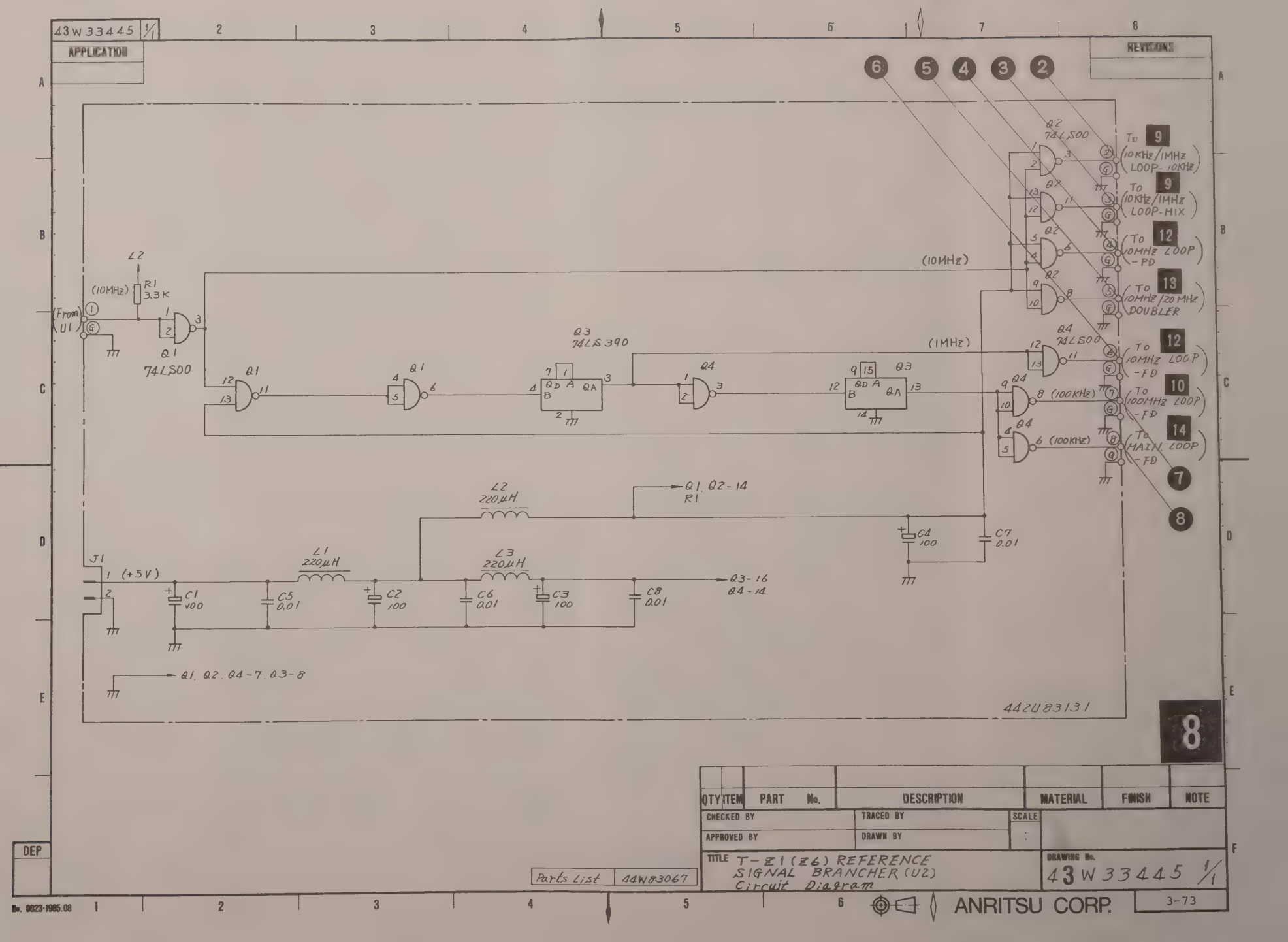
43W33445 1/1
APPLICATION
REVISIONS
6 5 4 3 2
L2
(10MHz)
R1 3.3K
(From U1)
Q1 74LS00
Q1
Q3 74LS390
Q4
Q3
(10MHz)
(1MHz)
Q2 74LS00
Q4 74LS00
To 9 (10KHz/1MHz LOOP-10KHz)
To 9 (10KHz/1MHz LOOP-MIX)
To 12 (10MHz LOOP -PD)
To 13 (10MHz/20MHz DOUBLER)
To 12 (10MHz LOOP -FD)
To 10 (100MHz LOOP -FD)
To 14 (MAIN LOOP -FD)
(100KHz)
(100KHz)
7
8
L2 220μH
Q1, Q2-14
R1
C4 100
C7 0.01
J1
1 (+5V)
2
L1 220μH
L3 220μH
C1 100
C5 0.01
C2 100
C6 0.01
C3 100
C8 0.01
Q3-16
Q4-14
Q1, Q2, Q4-7, Q3-8
442U83131
8
QTY ITEM PART No. DESCRIPTION MATERIAL FINISH NOTE
CHECKED BY
TRACED BY
SCALE
APPROVED BY
DRAWN BY
TITLE T-E1(Z6) REFERENCE SIGNAL BRANCHER (U2) Circuit Diagram
DRAWING No. 43W33445 1/1
DEP
Parts List 44W83067
No. 9023-1985.08
ANRITSU CORP.
3-73

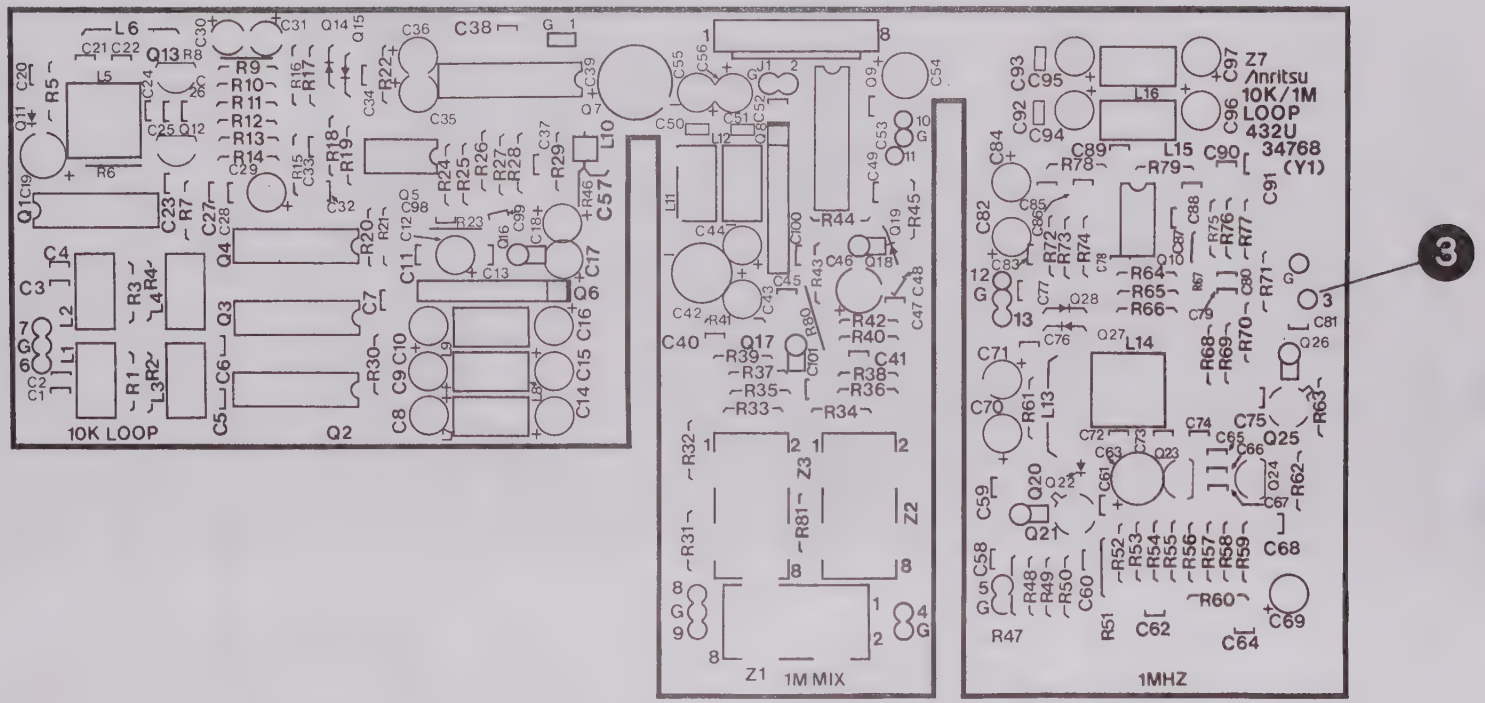

Fig. 3-29 T-Z1 (Z7) 10 kHz/1 MHz LOOP PC Board 9 Parts Layout

APPLICATION

REVISIONS

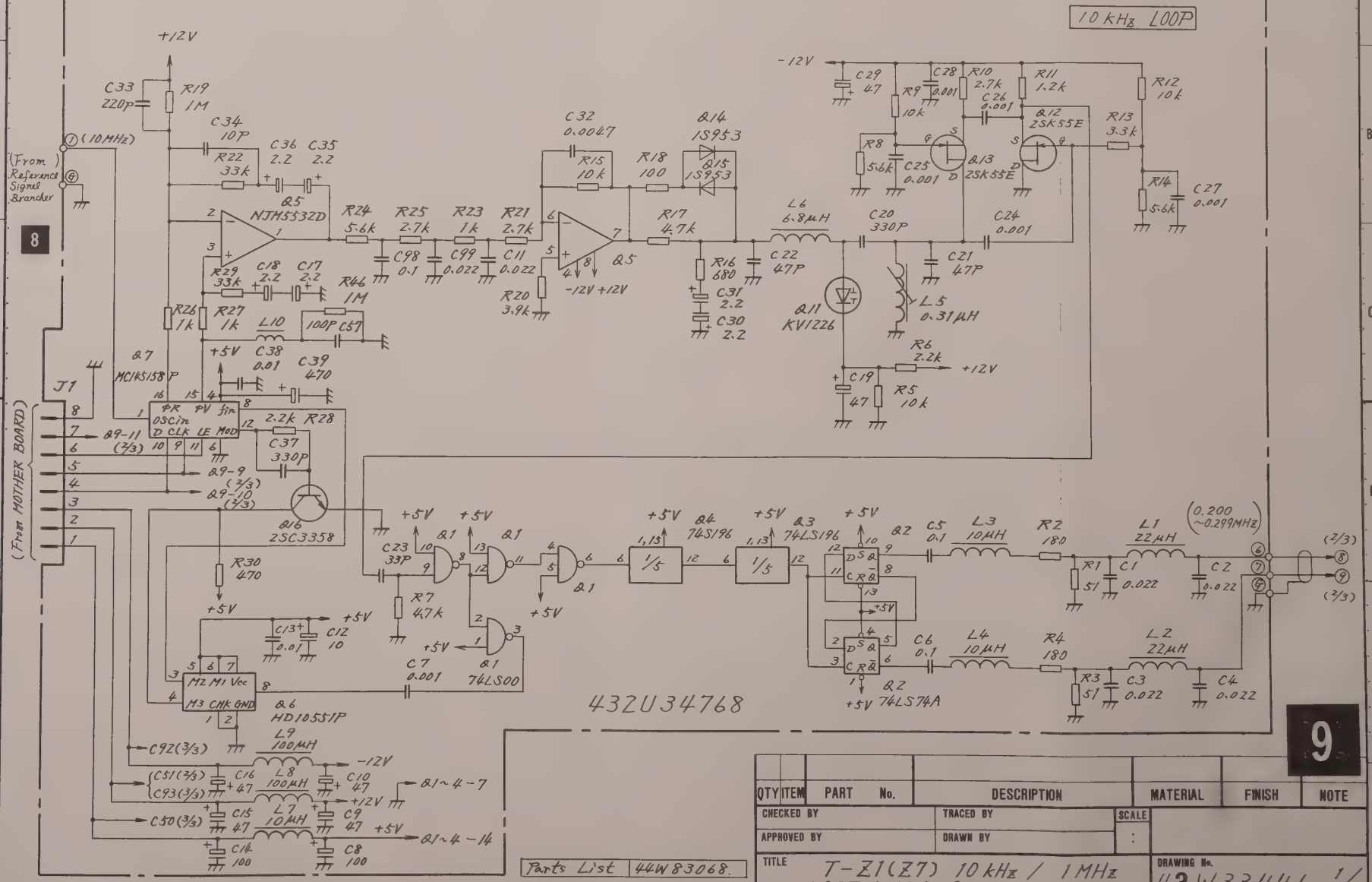

8

9

DEP

QTY	ITEM	PART No.	DESCRIPTION	MATERIAL	FINISH	NOTE
CHECKED BY		TRACED BY		SCALE		
APPROVED BY		DRAWN BY		:		

Parts List 44W83068.

TITLE: T-Z1(Z7) 10 kHz / 1 MHz LOOP (U2) Circuit Diagram.

DRAWING No. 43W33446 1/3

43W33446 2/3

APPLICATION

REVISIONS

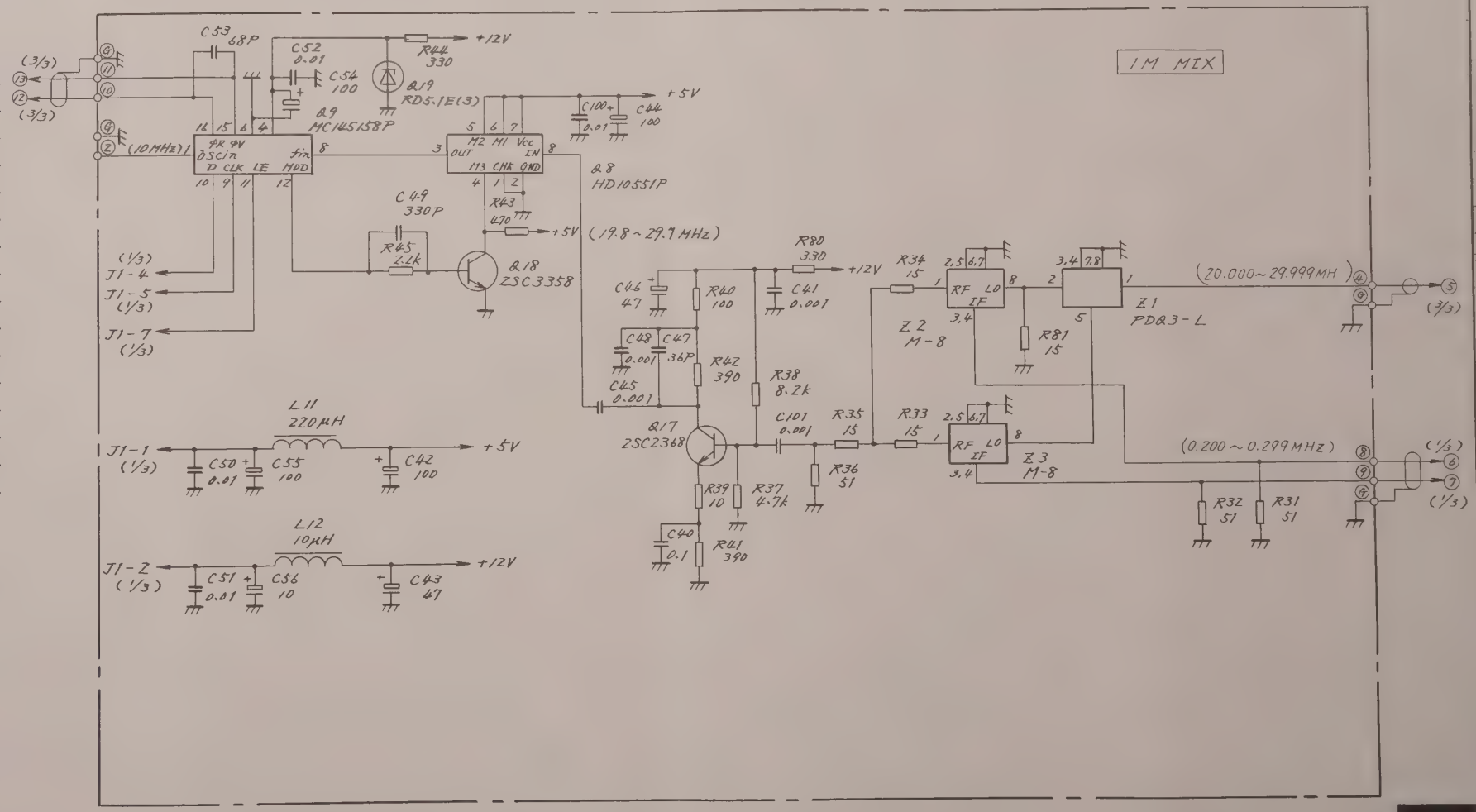

QTY	ITEM	PART No.	DESCRIPTION	MATERIAL	FINISH

9

CHECKED BY	TRACED BY	SCALE	
APPROVED BY	DRAWN BY	:	

TITLE: T-Z1(Z7) 10kHz / 1MHz LOOP(UZ) Circuit Diagram

DRAWING No. 43W33446 2/3

DEP

No. 0023-1985.08

ANRITSU CORP.

3-77/3-78

APPLICATION

REVISIONS

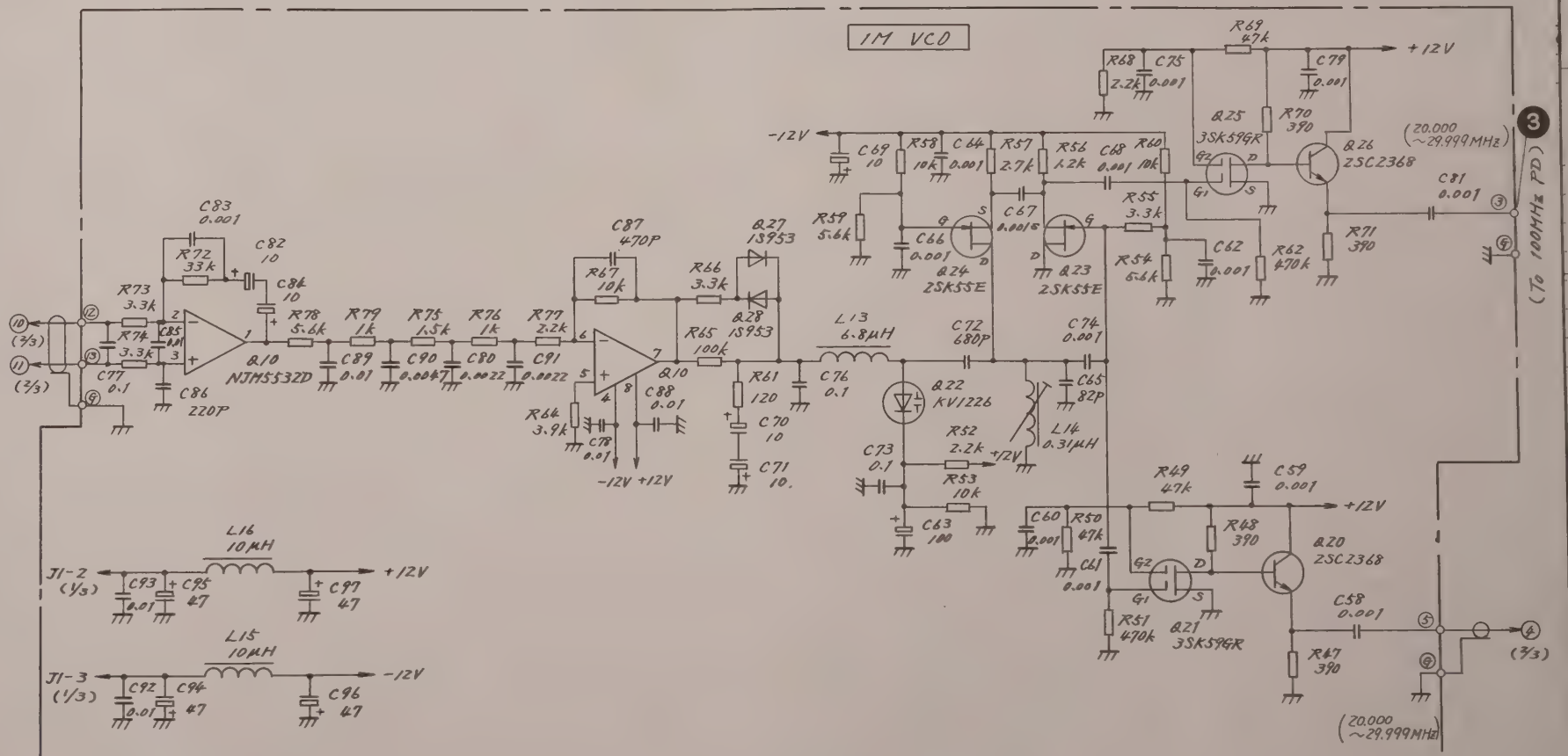

DEP

QTY	ITEM	PART No.	DESCRIPTION	MATERIAL	FINISH

CHECKED BY	TRACED BY	SCALE :
APPROVED BY	DRAWN BY	

TITLE: T-Z1(Z7) 10kHz / 1MHz LOOP(U2) Circuit Diagram.

DRAWING No. 43W33446 3/3

9

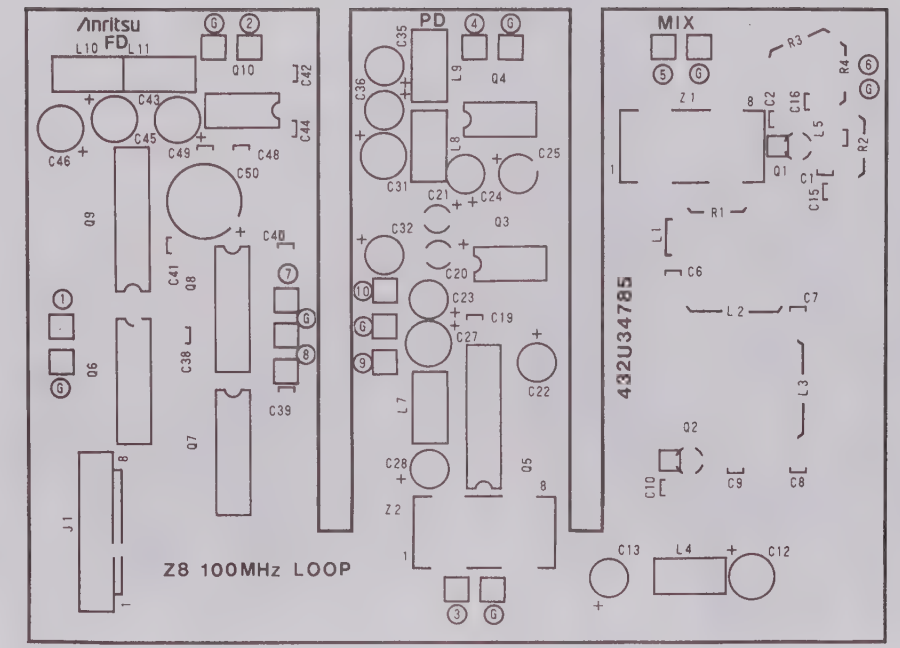

Fig. 3-30 T-Z1 (Z8) 100 MHz LOOP PC Board 10 Parts Layout

43W33447 1/3

APPLICATION

REVISIONS

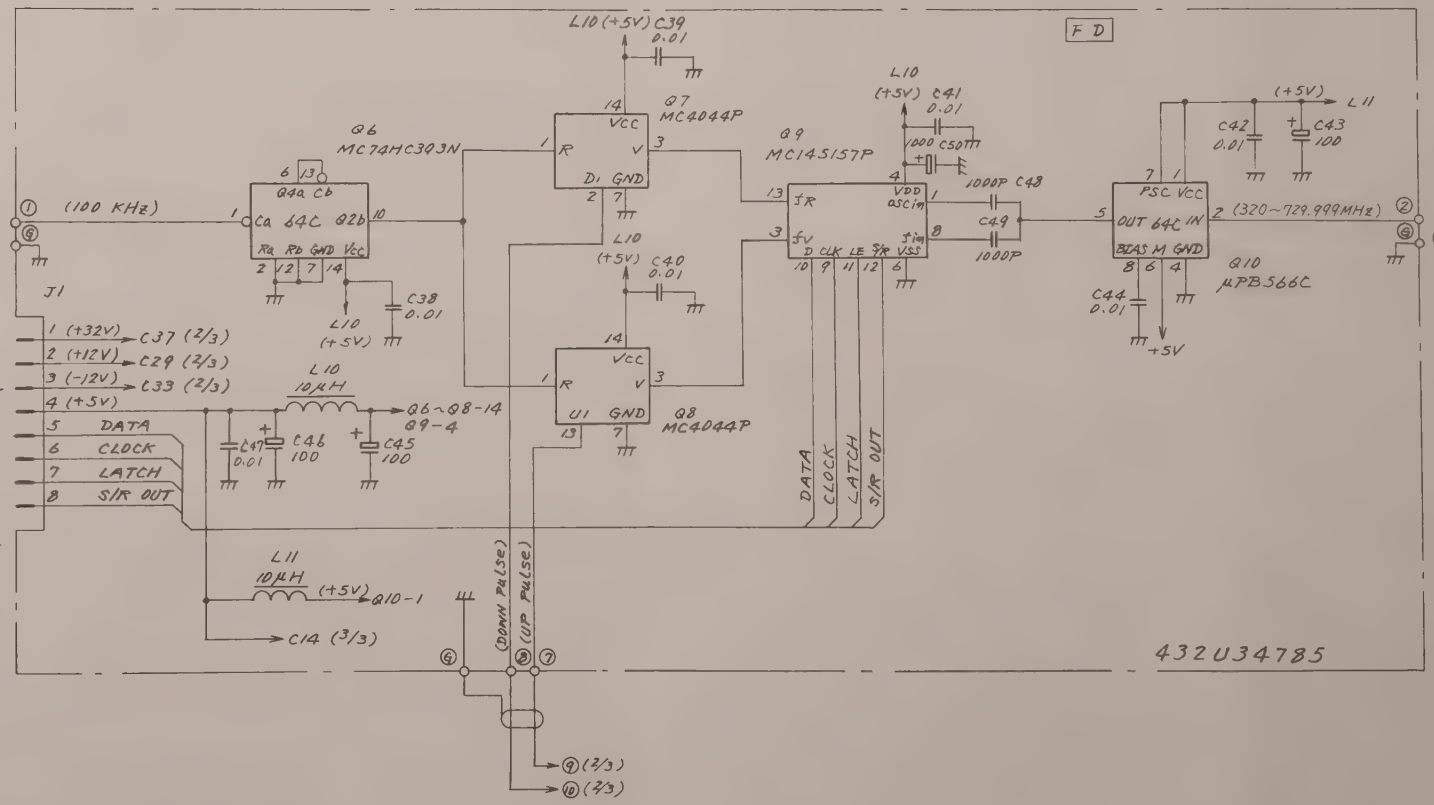

10

QTY	ITEM	PART No.	DESCRIPTION	MATERIAL	FINISH	NOTE

CHECKED BY	TRACED BY	SCALE	
APPROVED BY	DRAWN BY	:	

TITLE T-Z1(Z8) 100MHz LOOP (U2) Circuit Diagram

DRAWING No. 43W33447 1/3

Parts List 44W83069

DEP

No. 0023-1985.08

ANRITSU CORP.

3-81/3-82

APPLICATION

REVISIONS

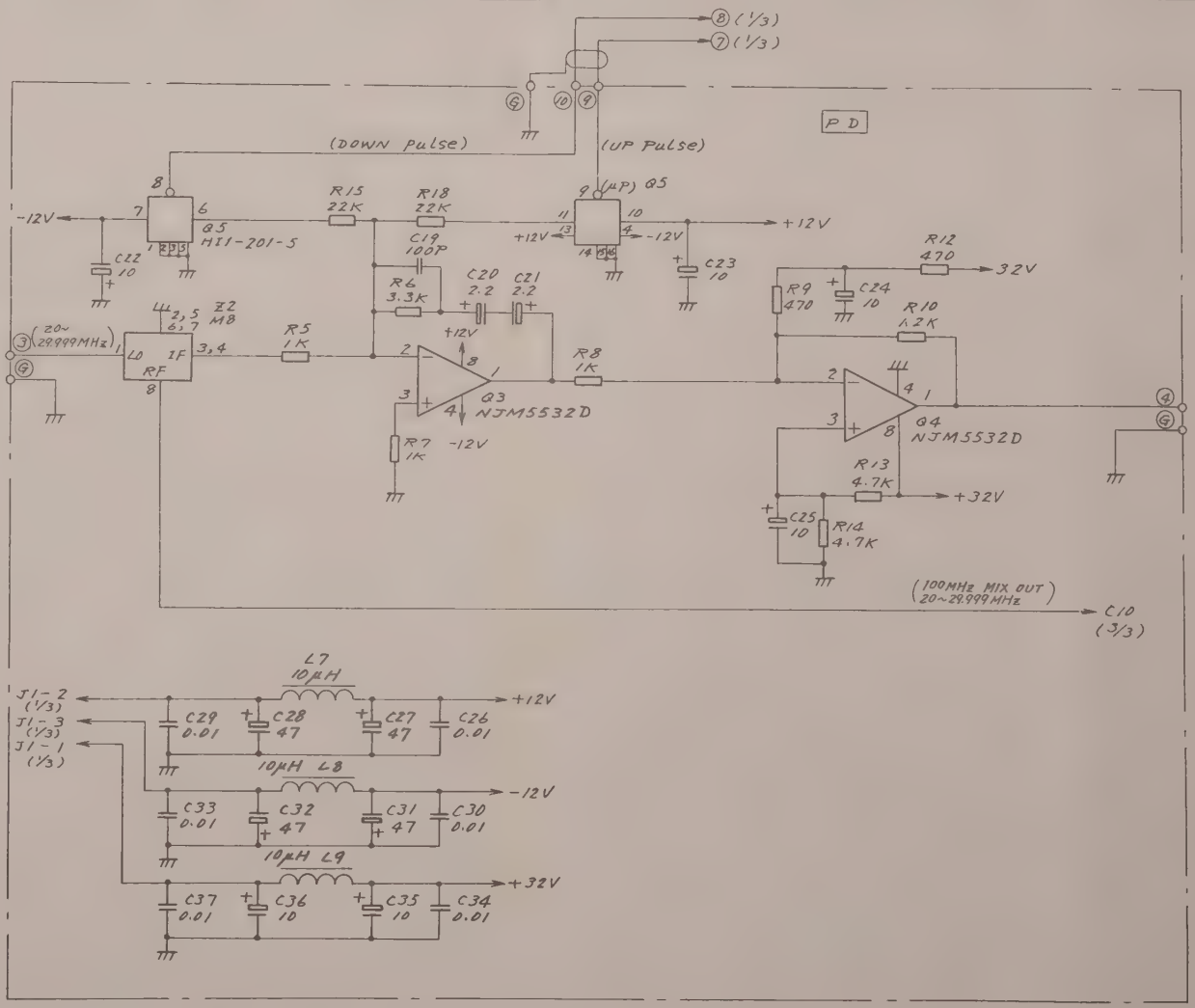

10

QTY	ITEM	PART No.	DESCRIPTION	MATERIAL	FINISH	NOTE
CHECKED BY		TRACED BY	SCALE			
APPROVED BY		DRAWN BY	:			

TITLE T-Z1(Z8) 100MHz LOOP (U2) Circuit Diagram

DRAWING No. 43W33447 2/3

DEP

APPLICATION

REVISIONS

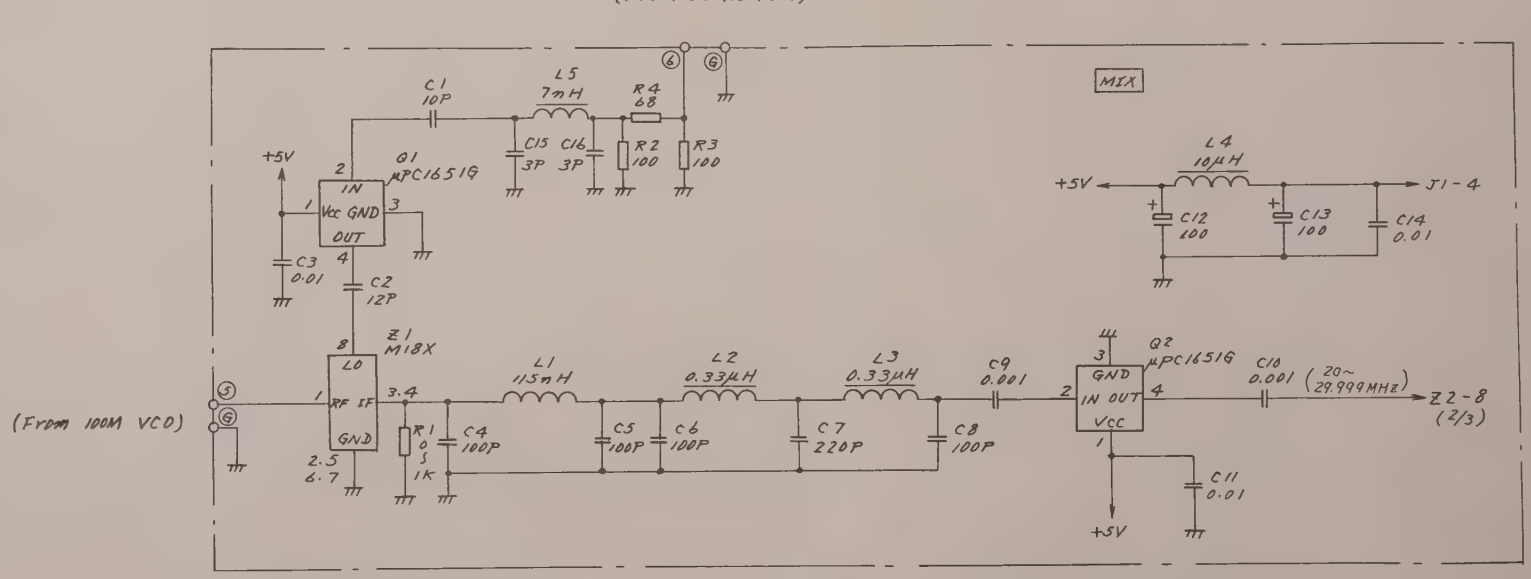

10

QTY	ITEM	PART No.	DESCRIPTION	MATERIAL	FINISH	NOTE

CHECKED BY	TRACED BY	SCALE	
APPROVED BY	DRAWN BY	:	

TITLE T-Z1 (Z8) 100MHz LOOP (U2) Circuit Diagram

DRAWING No. 43W33447 3/3

DEP

ANRITSU CORP.

3-85

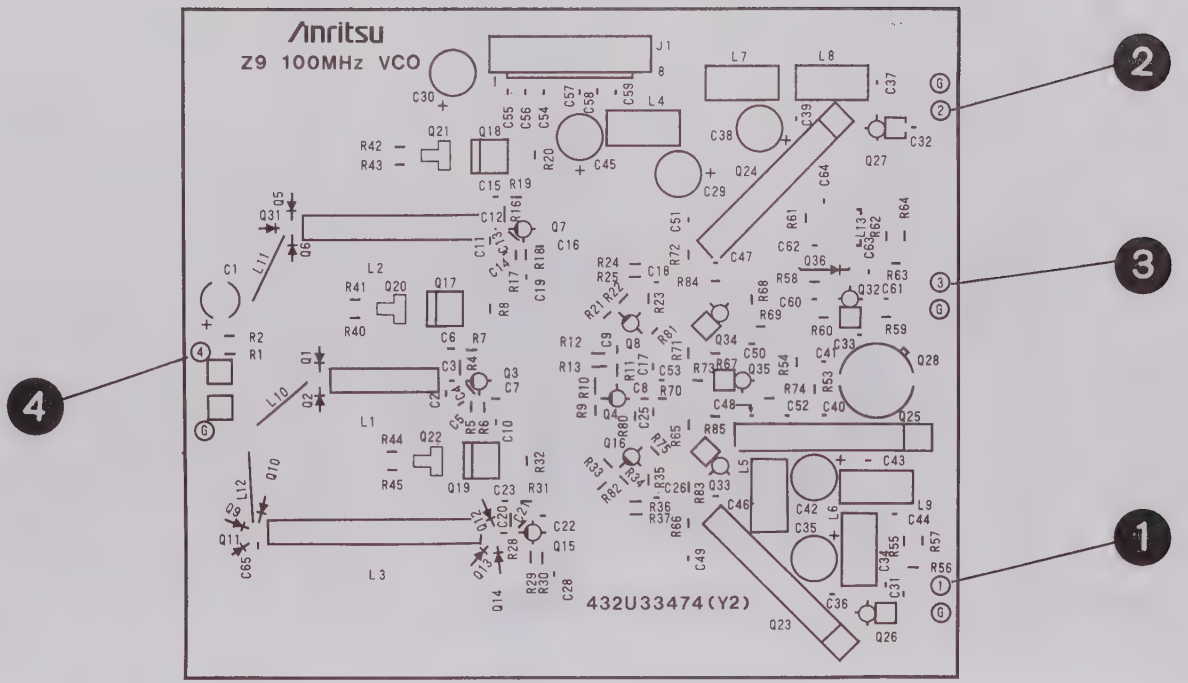

Fig. 3-31 T-Z1 (Z9) 100 MHz VCO PC Board 11 Parts Layout

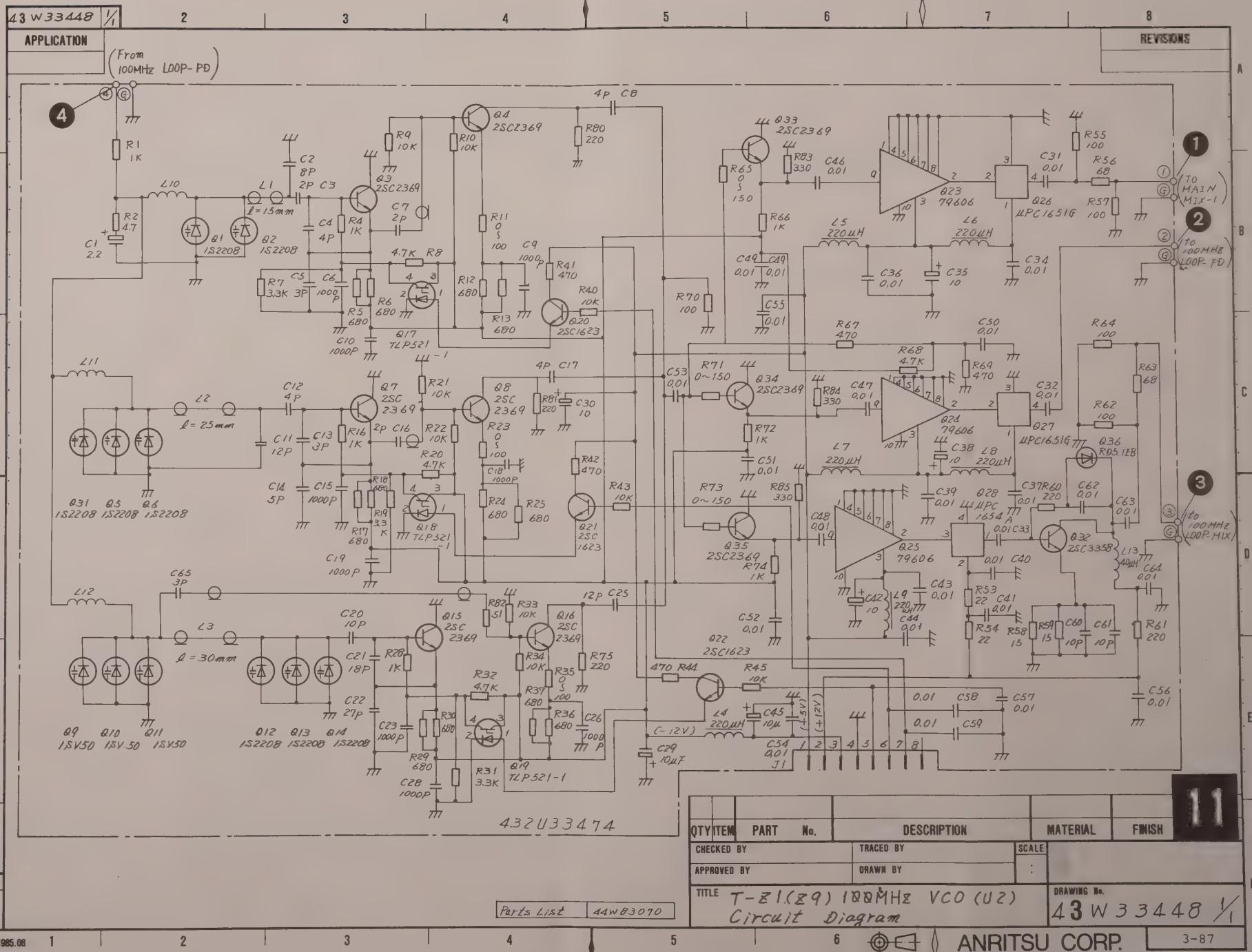
43W33448 1/1
APPLICATION
REVISIONS
(From 100MHz LOOP-PD)
4
1
(To MAIN MIX-1)
2
(to 100MHz LOOP-FD)
3
(to 100MHz LOOP MIX)
Q31 Q5 Q6 IS2208 IS2208 IS2208
Q9 Q10 Q11 ISV50 ISV50 ISV50
Q12 Q13 Q14 IS2208 IS2208 IS2208
Q22 2SC1623
(-12V)
(+5V)
(+12V)
432U33474
QTY ITEM PART No. DESCRIPTION MATERIAL FINISH
11
CHECKED BY
APPROVED BY
TRACED BY
DRAWN BY
SCALE
TITLE T-E1(E9) 100MHz VCO (U2) Circuit Diagram
DRAWING No. 43W33448 1/1
Parts List 44W83070
DEP
No. 0023-1985.08
ANRITSU CORP.
3-87

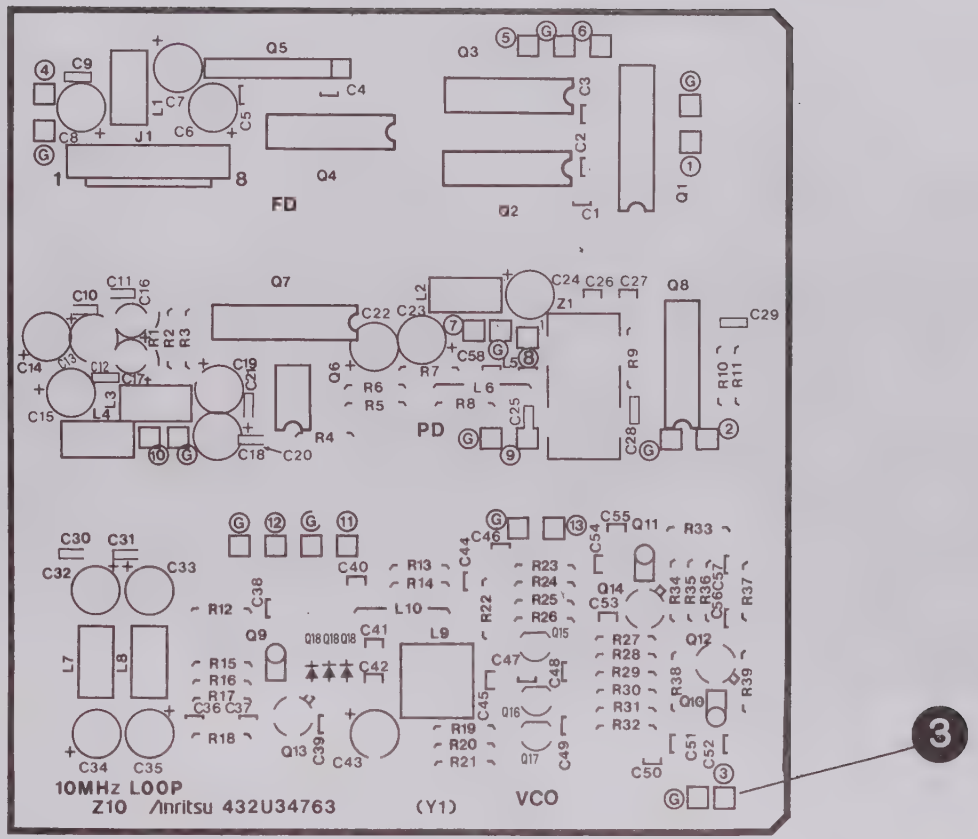

Fig. 3-32 T-Z1 (Z10) 10 MHz LOOP PC Board 12 Parts Layout

APPLICATION

REVISIONS

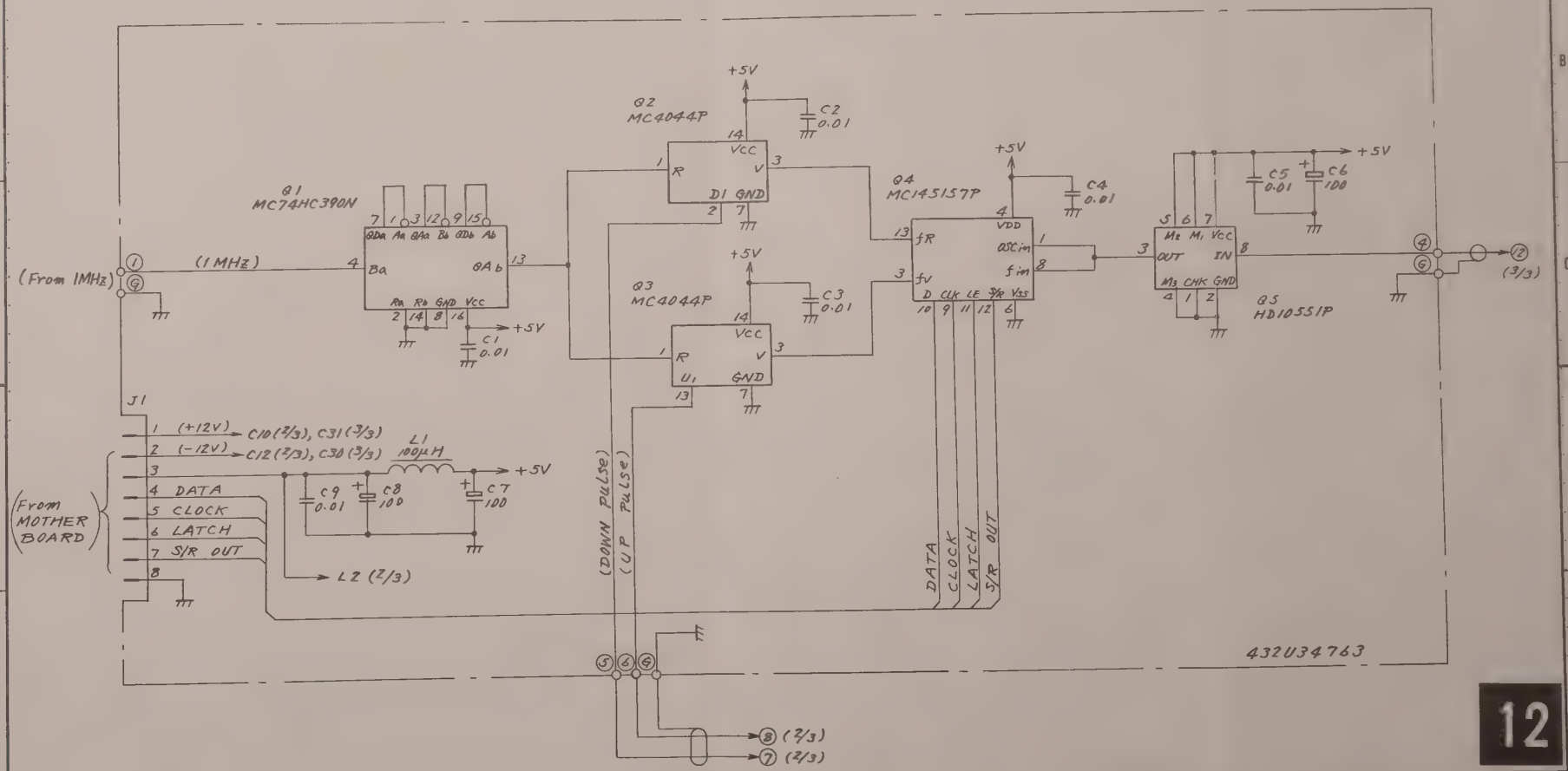

12

QTY	ITEM	PART No.	DESCRIPTION	MATERIAL	FINISH	NOTE

CHECKED BY	TRACED BY	SCALE :
APPROVED BY	DRAWN BY	

Parts List 44W83071

TITLE T-Z1 (Z10) 10MHz LOOP (U2) Circuit Diagram

DRAWING No. 43W33449 1/3

DEP

ANRITSU CORP.

3-89/3-90

No. 0023-1985.08

APPLICATION

REVISIONS

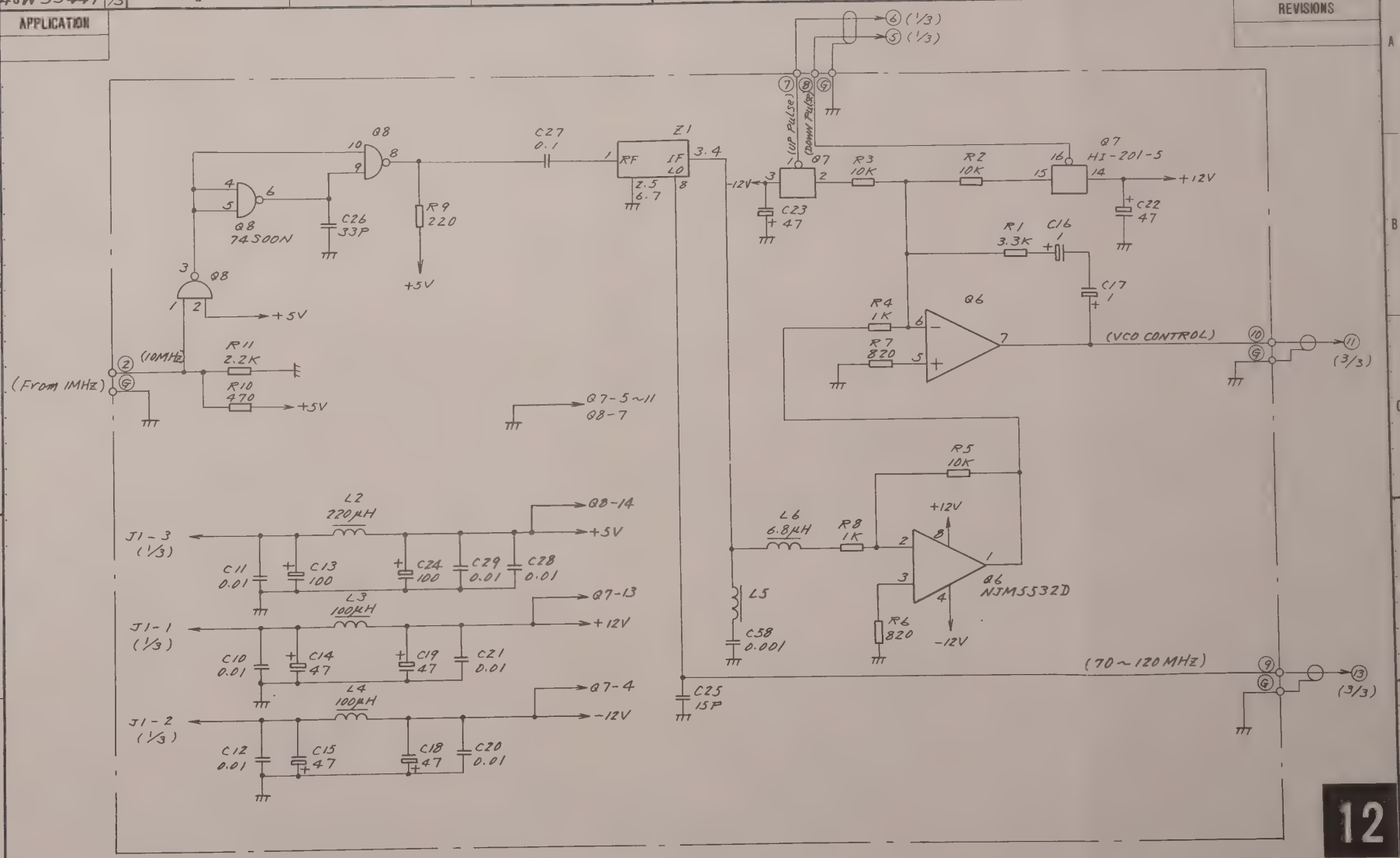

12

QTY	ITEM	PART No.	DESCRIPTION	MATERIAL	FINISH	NOTE

CHECKED BY	TRACED BY	SCALE	
APPROVED BY	DRAWN BY	:	

TITLE: T-Z1 (Z10) 10MHz LOOP (U2) Circuit Diagram

DRAWING No. 43W33449 2/3

DEP

ANRITSU CORP.

3-91/3-92

APPLICATION

REVISIONS

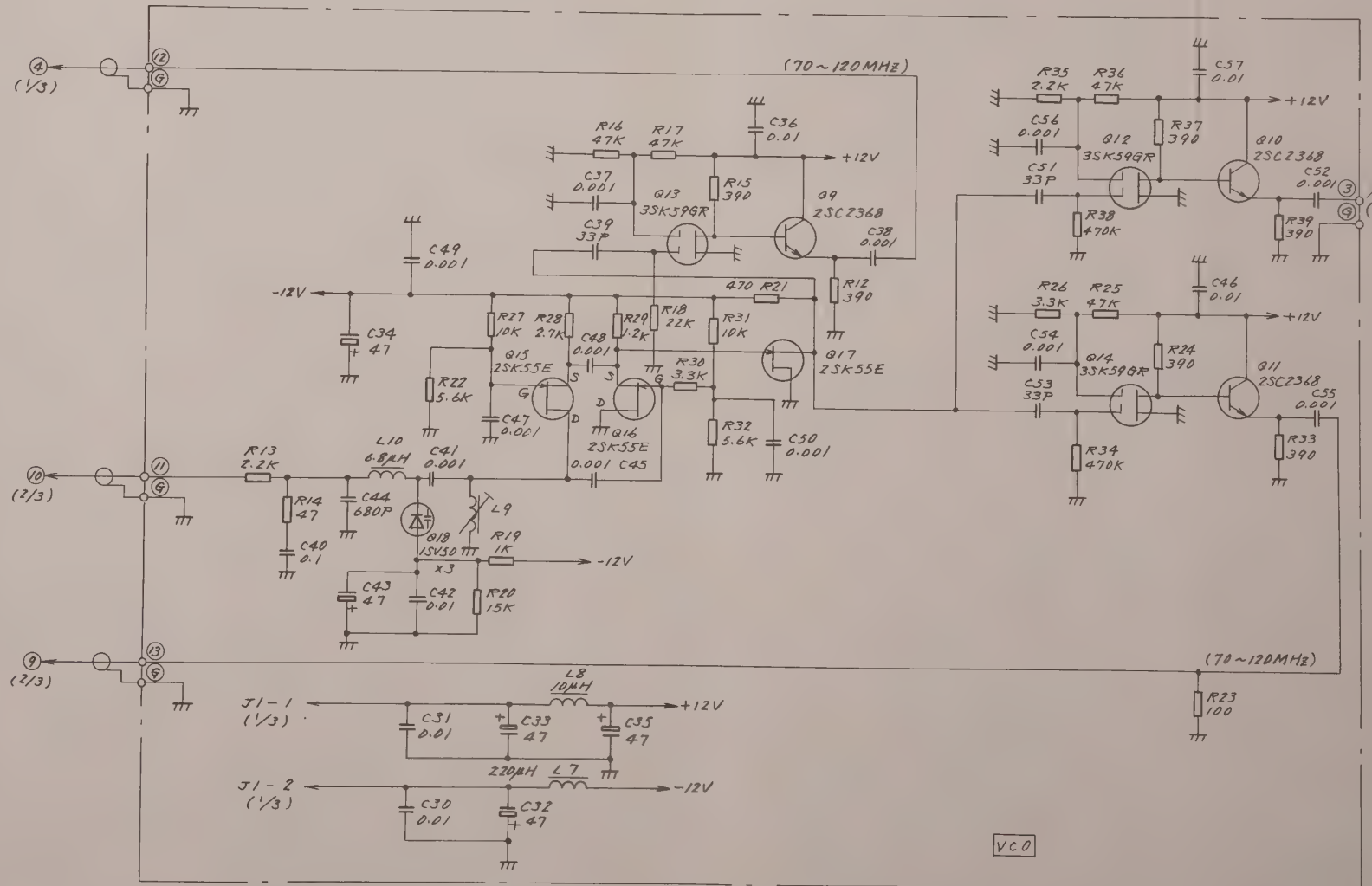

QTY	ITEM	PART No.	DESCRIPTION	MATERIAL	FINISH	NOTE
CHECKED BY		TRACED BY		SCALE		
APPROVED BY		DRAWN BY		:		

TITLE: T-Z1 (Z10) 10 MHz LOOP (U2) Circuit Diagram

DRAWING No. 43W33449 3/3

DEP

12

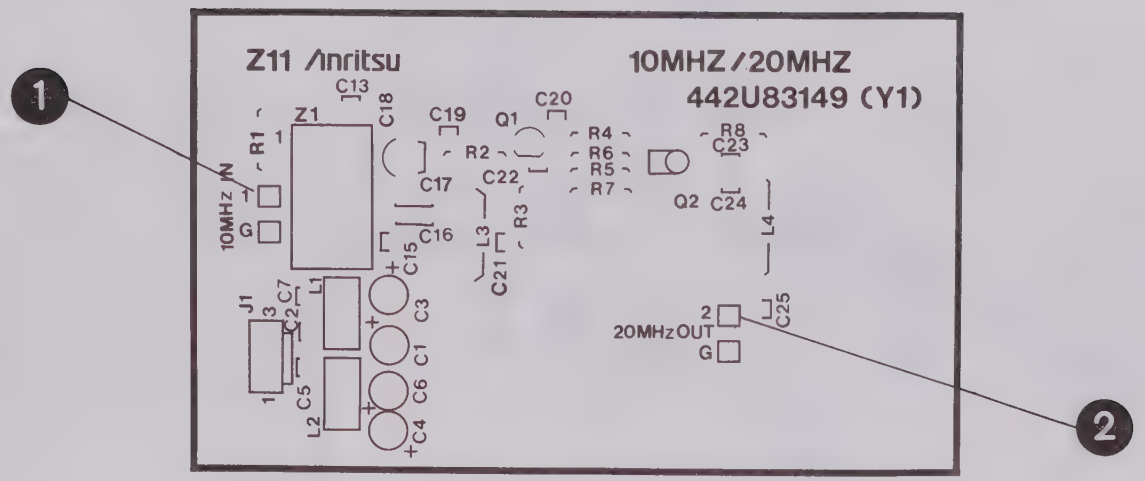

Fig. 3-33 T-Z1 (Z11) 10 MHz/20 MHz DOUBLER PC Board 13 Parts Layout

APPLICATION

REVISIONS

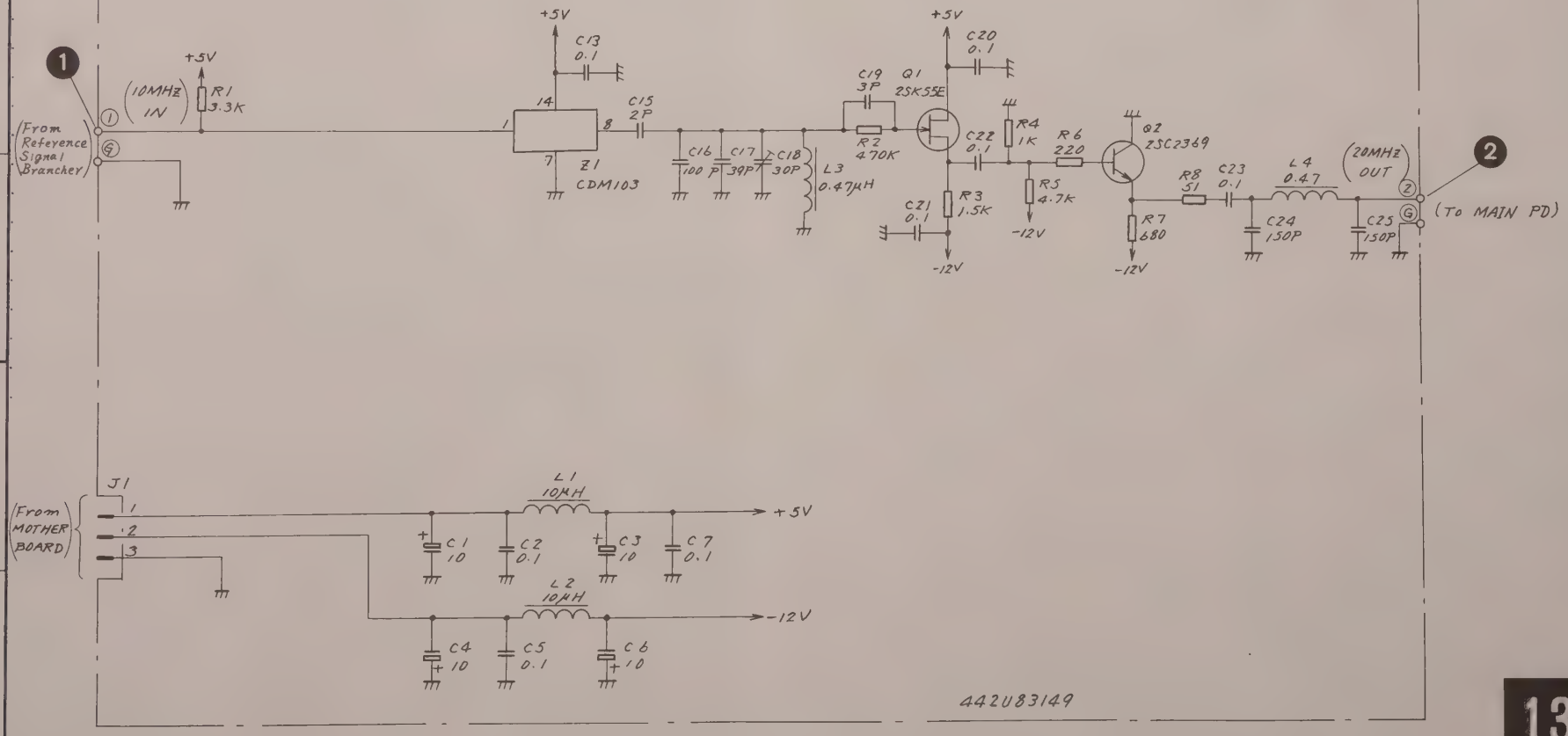

442U83149

13

QTY	ITEM	PART No.	DESCRIPTION	MATERIAL	FINISH	NOTE

CHECKED BY	TRACED BY	SCALE :
APPROVED BY	DRAWN BY	

TITLE T-Z1 (Z11) 10MHz/20MHz Doubler (U2) Circuit Diagram

DRAWING No. 43W33450 1/1

Parts List 44W83072

DEP

No. 0023-1985.08

ANRITSU CORP.

3-95

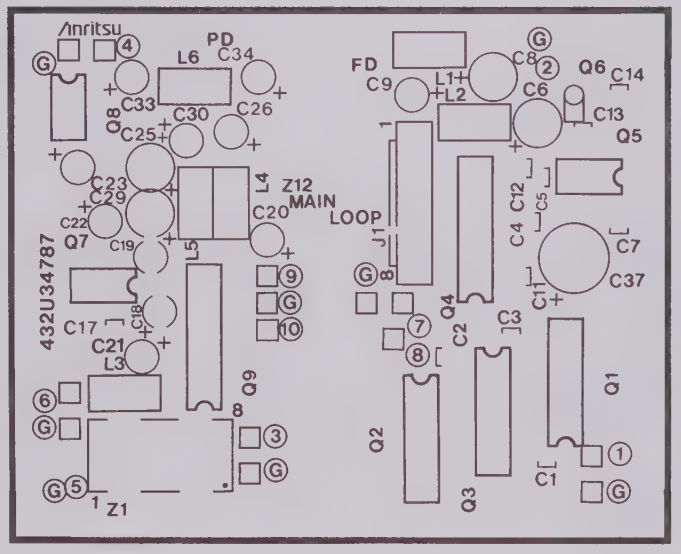

Fig. 3-34 T-Z1 (Z12) MAIN LOOP PC Board 14 Parts Layout

APPLICATION

REVISIONS

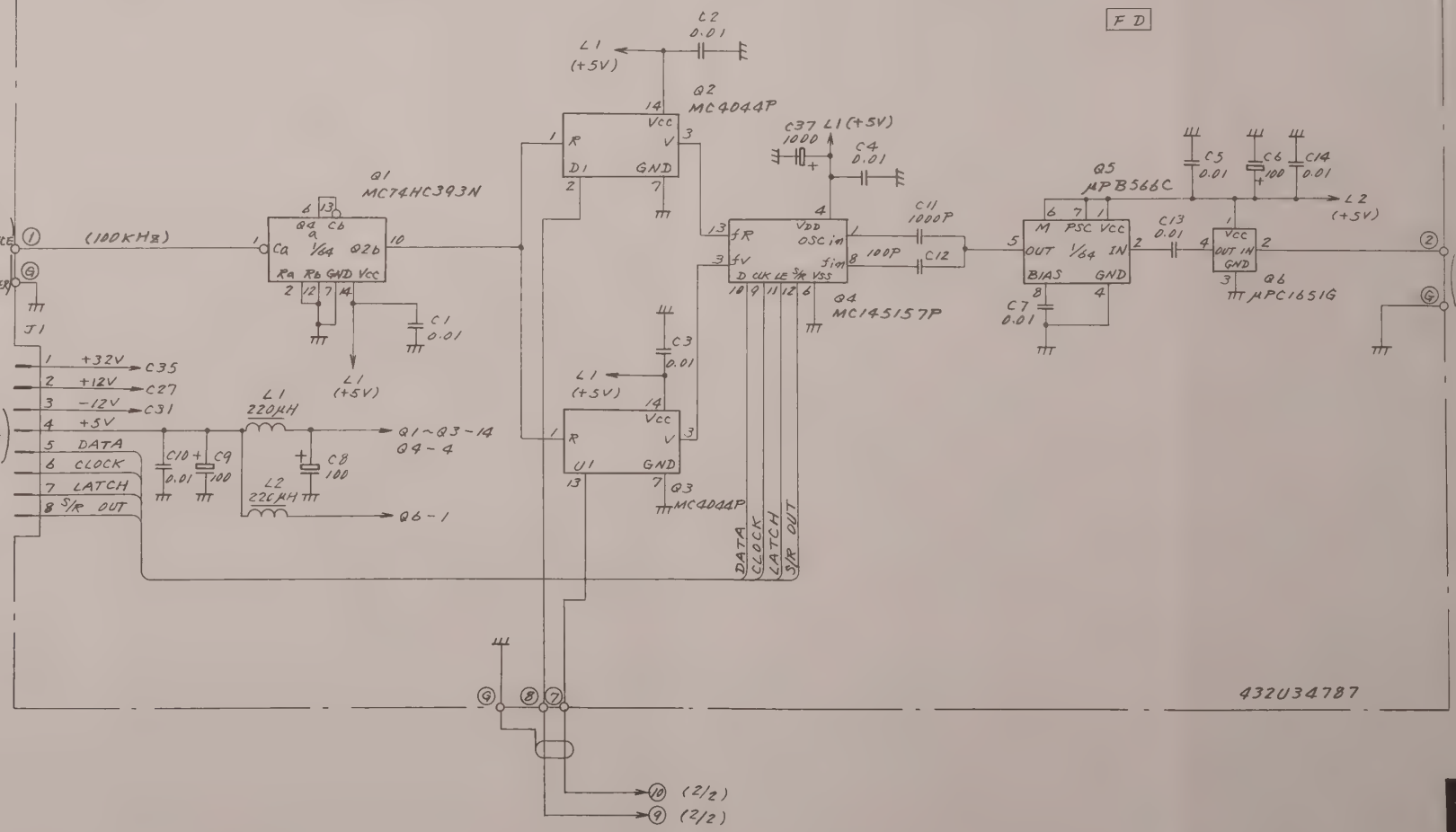

14

QTY	ITEM	PART No.	DESCRIPTION	MATERIAL	FINISH	NOTE
CHECKED BY		TRACED BY		SCALE		
APPROVED BY		DRAWN BY		:		

TITLE T-Z1 (Z12) MAIN LOOP (U2) Circuit Diagram

DRAWING No. 43W33451 1/2

Parts List 44W83073

DEP

43W33451 2/2

APPLICATION

REVISIONS

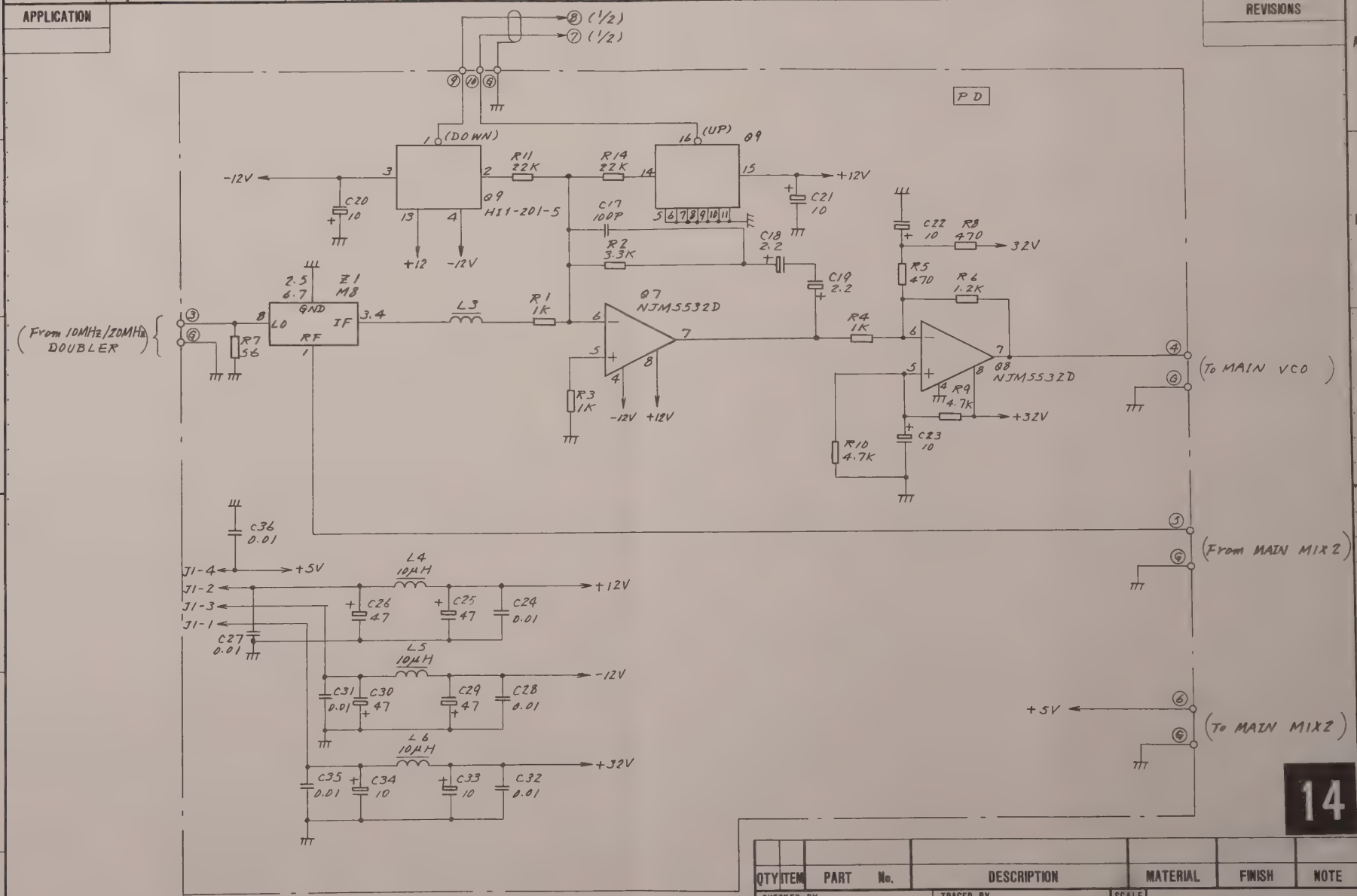

14

QTY	ITEM	PART No.	DESCRIPTION	MATERIAL	FINISH	NOTE

CHECKED BY | TRACED BY | SCALE :

APPROVED BY | DRAWN BY

TITLE T-Z1(Z12) MAIN LOOP (U2) Circuit Diagram

DRAWING No. 43W33451 2/2

Parts List 44W83079

DEP

No. D023-1985.08

ANRITSU CORP.

3-99

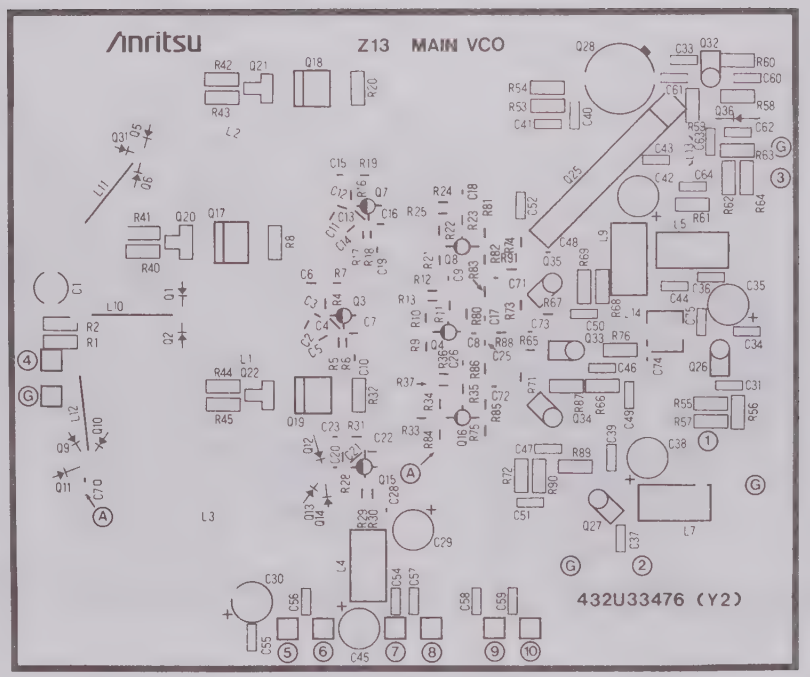

Fig. 3-35 T-Z1 (Z13) MAIN VCO PC Board 15 Parts Layout

APPLICATION

REVISIONS

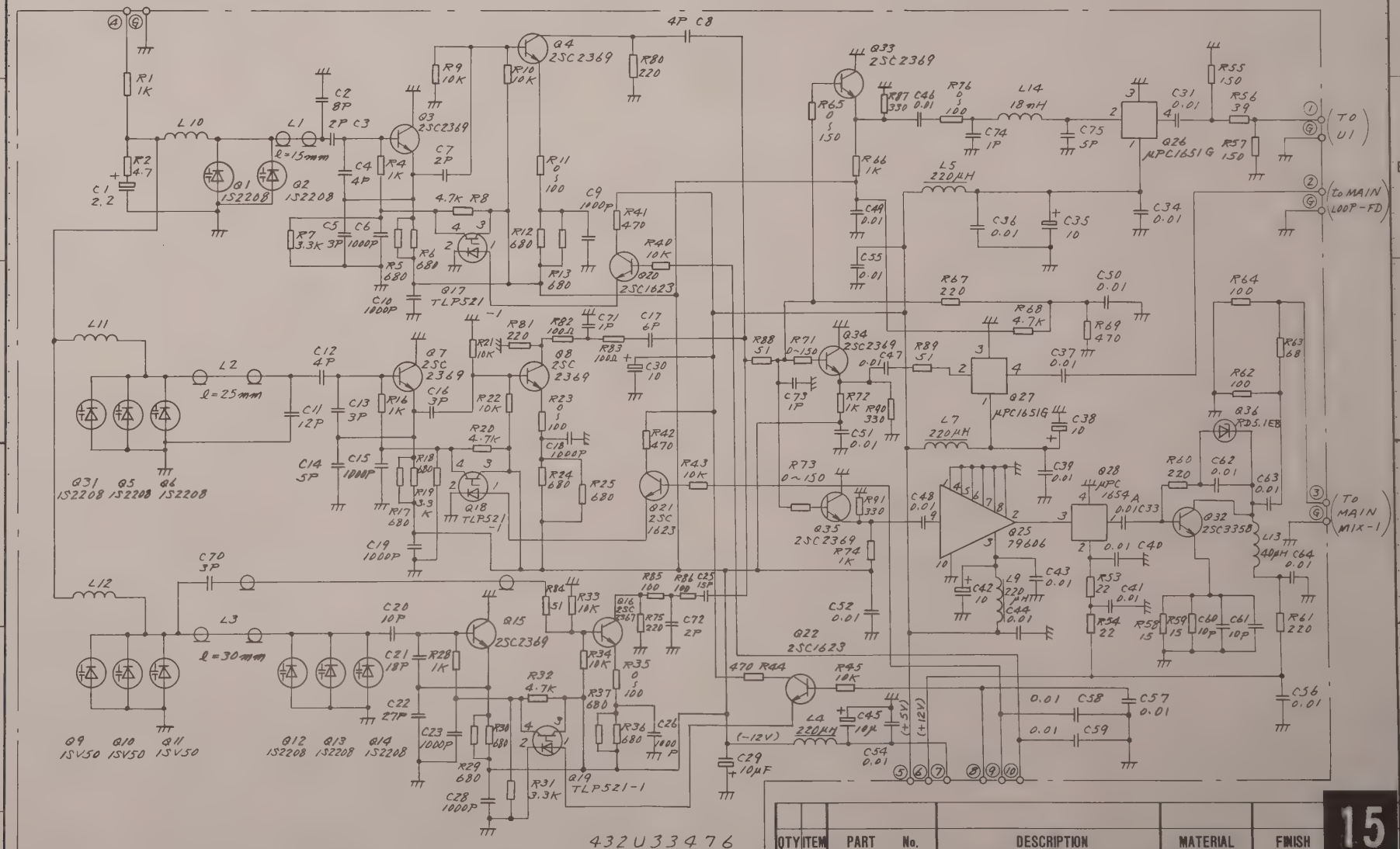

QTY	ITEM	PART No.	DESCRIPTION	MATERIAL	FINISH

15

CHECKED BY		TRACED BY	SCALE :
APPROVED BY		DRAWN BY	

TITLE T-Z1(Z13) MAIN VCO (U2) Circuit Diagram

DRAWING No. 43W33452 1/1

Parts List 44W83074

DEP

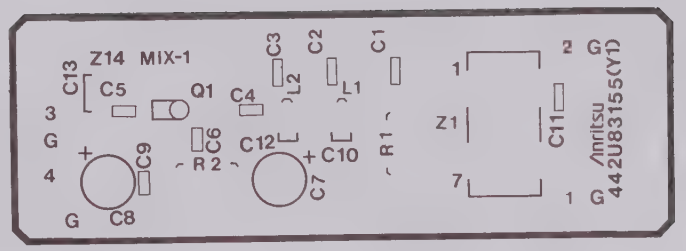

Fig. 3-36 T-Z1 (Z14) MAIN MIX 1 PC Board 16 Parts Layout

43W33453 1/1

APPLICATION

REVISIONS

(From MAIN VCO)

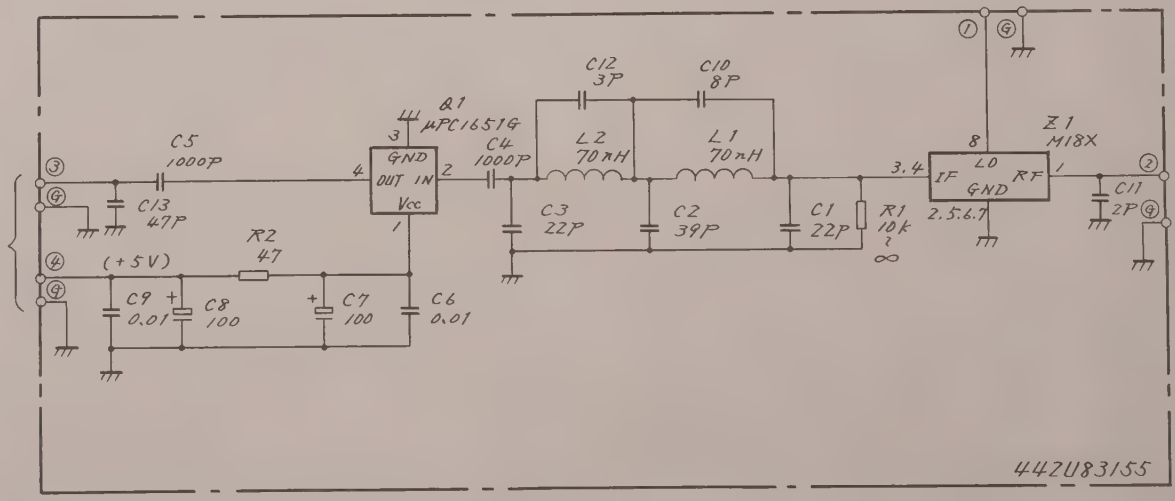

(To MAIN MIX 2)

(From 100M VCO)

442U83155

16

QTY	ITEM	PART No.	DESCRIPTION	MATERIAL	FINISH	NOTE

CHECKED BY	TRACED BY	SCALE	
APPROVED BY	DRAWN BY	:	

TITLE T-Z1(Z14) MAIN MIX 1 (U2) Circuit Diagram.

DRAWING No. 43W33453 1/1

Parts List 44W83075

DEP

ANRITSU CORP.

3-103

No. 0023-1985.08

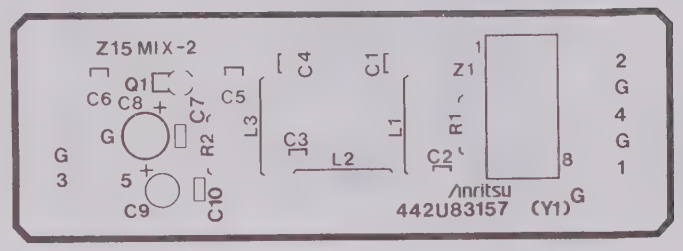

Fig. 3-37 T-Z1 (Z15) MAIN MIX 2 PC Board 17 Parts Layout

APPLICATION

REVISIONS

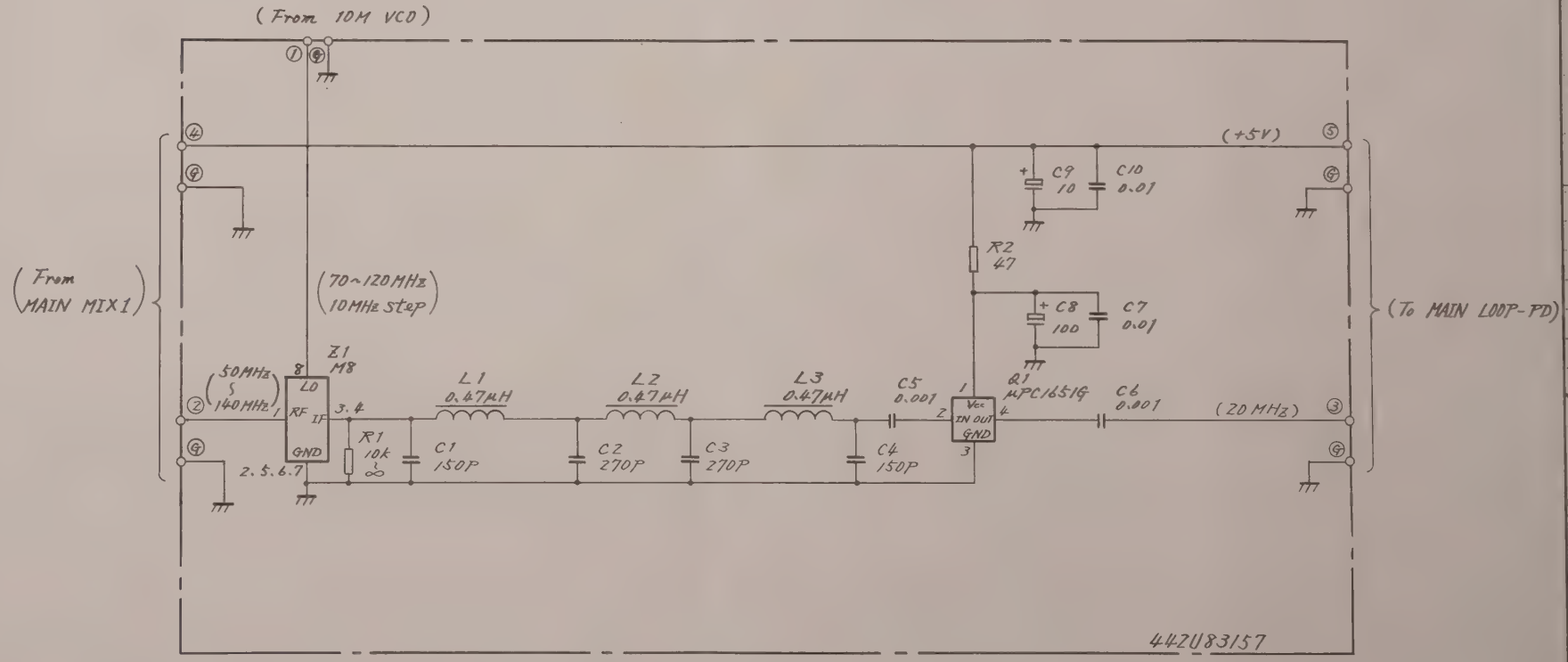

17

QTY	ITEM	PART No.	DESCRIPTION	MATERIAL	FINISH	NOTE

CHECKED BY	TRACED BY	SCALE
APPROVED BY	DRAWN BY	:

TITLE T-Z1(Z15) MAIN MIX 2 (U2) Circuit Diagram.

DRAWING No. 43W33454 1/1

Parts List 44W83076

DEP

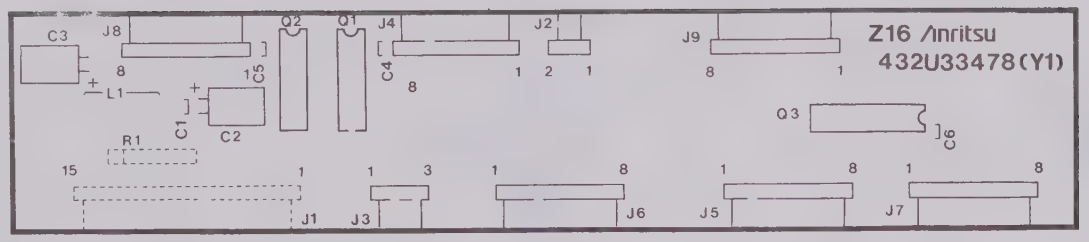

Fig. 3-38 T-Z1 (Z16) U2 MOTHERBOARD PC Board 18 Parts Layout

APPLICATION

REVISIONS

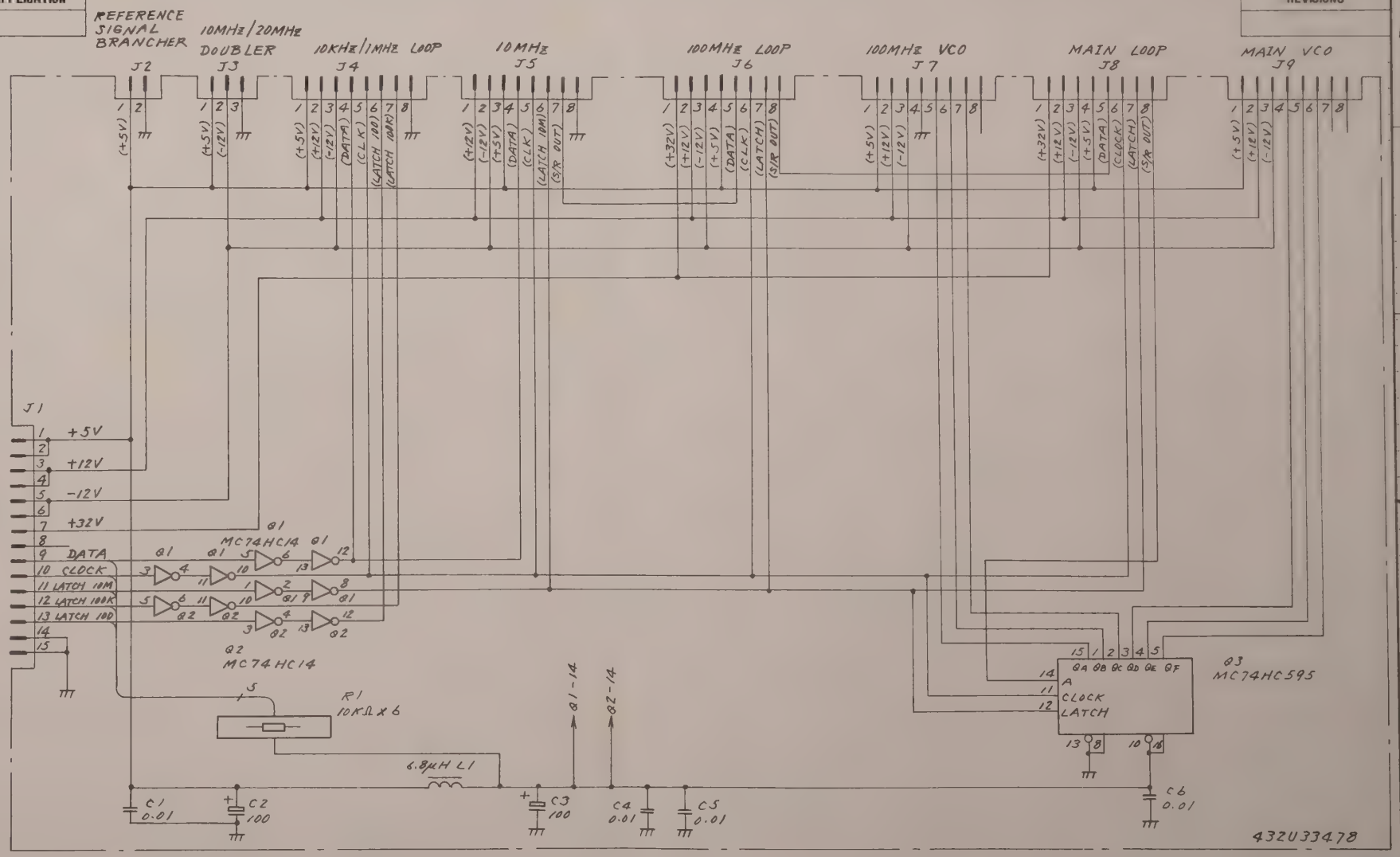

QTY	ITEM	PART No.	DESCRIPTION	MATERIAL	FINISH

18

CHECKED BY	TRACED BY	SCALE :
APPROVED BY	DRAWN BY	

TITLE T-Z1 (Z16) MOTHER BOARD (U2) Circuit Diagram

DRAWING No. 43W33455 1/1

Parts List 44W83077

DEP

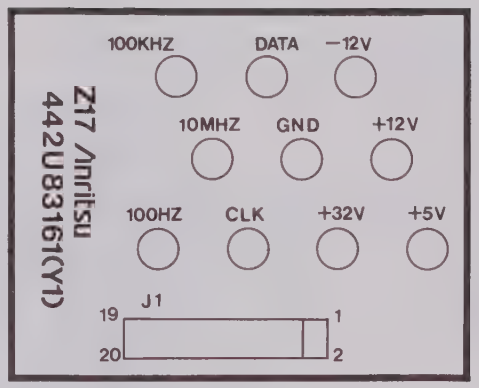

Fig. 3-39 T-Z1 (Z17) U2 SIGNAL SUPPLY PC Board 19 Parts Layout

APPLICATION

REVISIONS

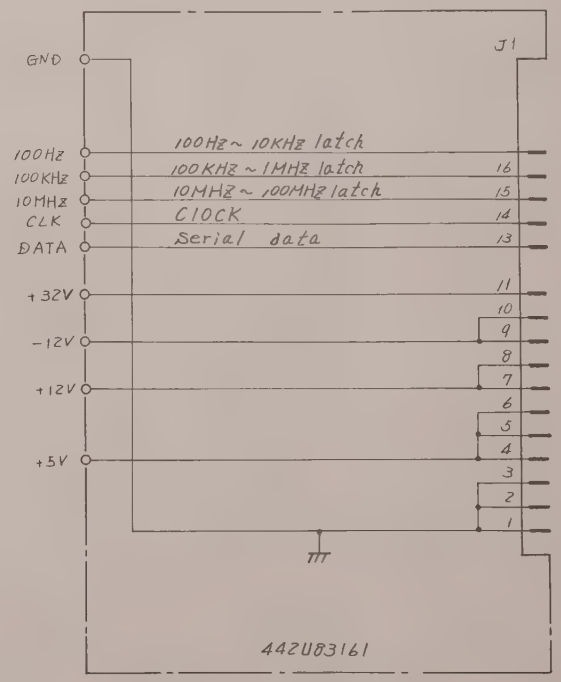

19

QTY	ITEM	PART No.	DESCRIPTION	MATERIAL	FINISH	NOTE
CHECKED BY		TRACED BY	SCALE			
APPROVED BY		DRAWN BY	:			

Parts List 44W83078

TITLE T-Z1(Z17) U2 SIGNAL SUPPLY(U2) Circuit Diagram

DRAWING No. 43W33456 1/1

DEP

ANRITSU CORP.

3.5.4 T-Z2 PATTERN GENERATOR-I PC board 20

(1) Circuit description

Figure 3-40 shows the block diagram of this circuit.

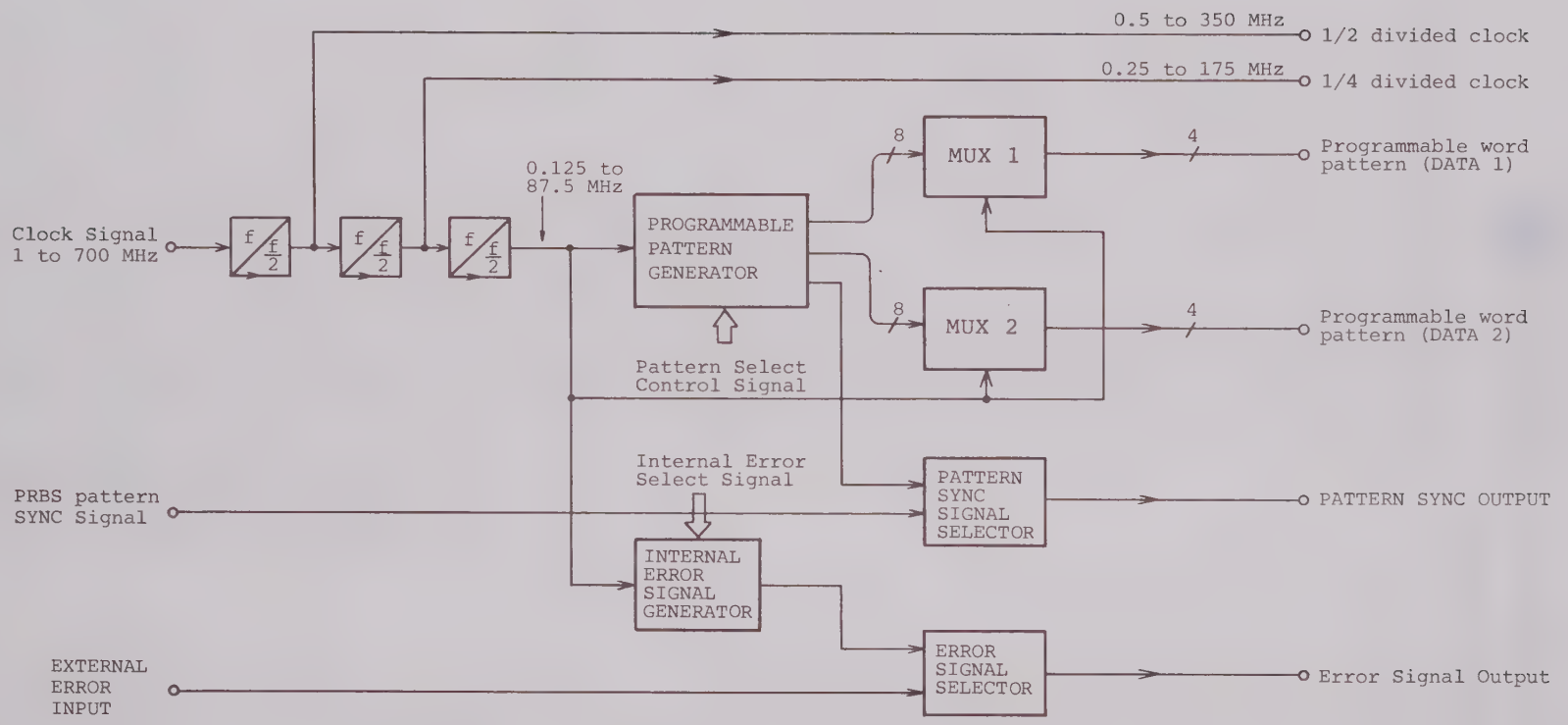

Fig. 3-40 PATTERN GENERATOR-I T-Z2 Block Diagram

This circuit receives the 1 to 700 MHz clock signal from the Synthesizer section (T-Z1). This clock signal is passed through three 1/2 frequency dividers and becomes the 0.125 to 87.5 MHz 1/8 divided signal. This signal is input to a programmable word pattern generator and program word patterns (A, B, C, ALT D/E, and 1/N patterns) of two groups of eight pairs each are obtained by the pattern selection signal from CONTROL (T-Z5). For alternate D/E pattern, eight pairs of patterns corresponding to the D and E patterns which response to low and high levels of the low frequency ALT INPUT signal applied to the programmable pattern generator are sent out.

The signals of these two groups are multiplexed with the 1/8 divided clock signal by multiplexers and becomes four pairs of programmable patterns with a data bit rate of two times.

This circuit also generates the error signal for occurring an error in the generated DATA signals. These error signals consist of internal and external signals. The internal signals are made up of error signals of five fixed error rates (2.0×10^{-N}, N=3 to 7) and a single error signal which generates a single error by pressing the SINGLE key.

The error signals having a fixed error rate are generated by dividing the 1/8 divided clock to obtain the required error rate. One of these error signals is selected and sent to PATTERN GENERATOR-II (T-Z3).

This circuit also selects either the pattern sync signal synchronized to the programmable word pattern generated by the programmable pattern generator or the pattern sync signal synchronized to the PRBS pattern from PATTERN GENERATOR-II (T-Z3), and sends the selected signal to the outside as PATTERN SYNC OUTPUT.

The 1/2 frequency divided and 1/4 frequency divided signals of the clock signal from this circuit are sent to PATTERN GENERATOR-II (T-Z3).

(2) Troubleshooting and adjustment

After lifting the T-Z2 PC board using the extender board, perform troubleshooting and adjustment.

(a) Step 1

Panel Setting:

CLOCK : INTERNAL 700.000 MHz

Check the signal waveforms and frequencies from TP ❶ to TP ❹ (Clock or divided clock signals).

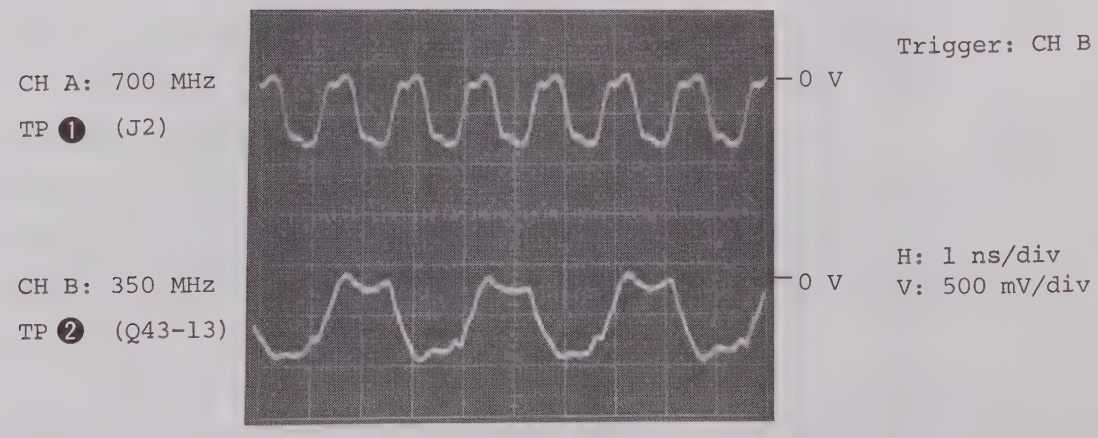

Fig. 3-41 TP ❶ and TP ❷ Waveforms of T-Z2

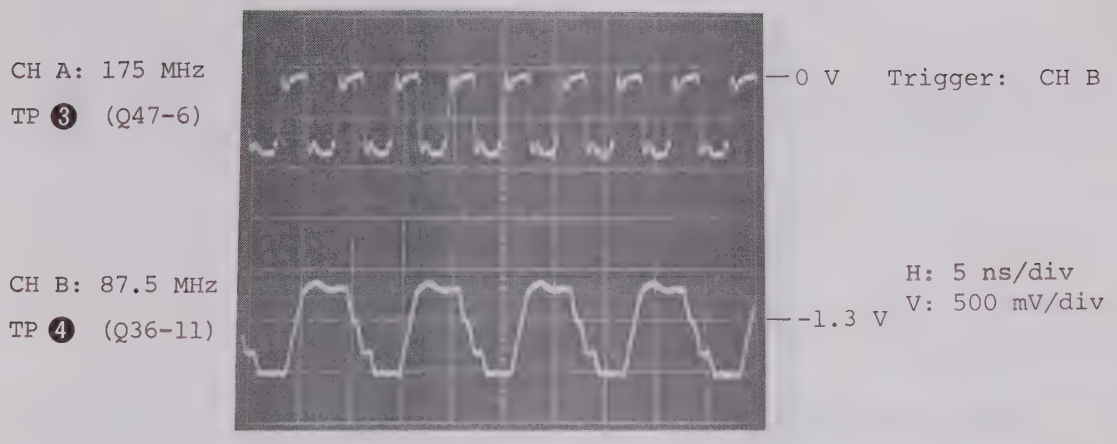

Fig. 3-42 TP ❸ and TP ❹ Waveforms of T-Z2

If the above waveforms and frequencies are OK, proceed to the next step without performing the following tests. If not OK, perform the following test.

1. When the TP ❶ clock signal is not presence or TP ❶ clock waveform or frequency is not OK, check the T-Z1 Synthesizer section (see paragraph 3.5.3 (2)).

2. When the waveform or frequency of TP ❷ , TP ❸ or TP ❹ (divided clock signal) is not OK, troubleshoot the circuits near the faulty test point.

(b) Step 2

Panel Setting:

CLOCK: INTERNAL 700.000 MHz

PATTERN: PROGRAMMABLE WORD A
N (WORD LENGTH) = 1, 128, 256

Check the TP ❺ and TP ❻ signal waveforms and frequencies using a sampling oscilloscope and frequency counter.

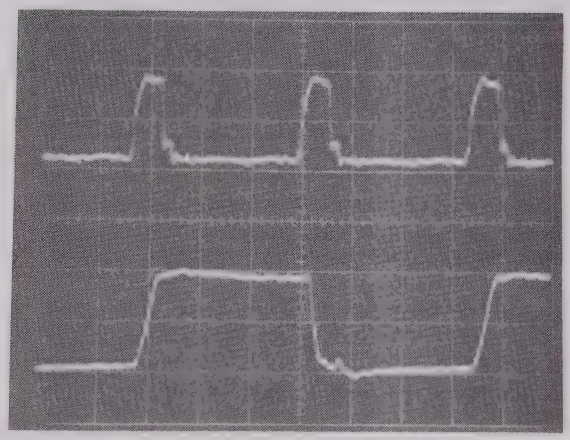

Fig. 3-43 TP ❺ and TP ❻ Waveform of T-Z2

Table 3-11 TP ❺ and TP ❻ Frequency of T-Z2

N (WORD LENGTH)	Frequency (MHz)	
	TP ❺ (Q35-4)	TP ❻ (Q19-15)
1	29.167	14.583
128	0.6836	0.3418
256	0.3418	0.1709

If the above waveforms and frequencies are OK, proceed to the next step without performing the following test. If not OK, perform the following test.

Check the control signals of Q34 and Q33 16 counter using an oscilloscope or tester.

Table 3-12 Control Signals of Q33 and Q34 16 Counter

N (WORD LENGTH)	Control signal (TTL Level)							
	LSB Q34-16	Q34-15	Q34-14	Q34-13	Q33-16	Q33-15	Q33-14	MSB Q33-13
1	H	L	L	L	L	L	L	L
128	L	H	H	H	H	H	H	L
256	L	H	H	H	H	H	H	H

L: low level, H: high level

If not OK after performing the above test, troubleshoot the circuits near the faulty test point.

(c) STEP 3

Panel Setting:

CLOCK: INTERNAL 700.000 MHz

PATTERN: PROGRAMMABLE WORD A
(1/2 MARK RATIO PATTERN)

Check the TP ❼ (TP ❿), TP ❽ (TP ⓫), and TP ❾ (TP ⓬) waveforms using an oscilloscope.

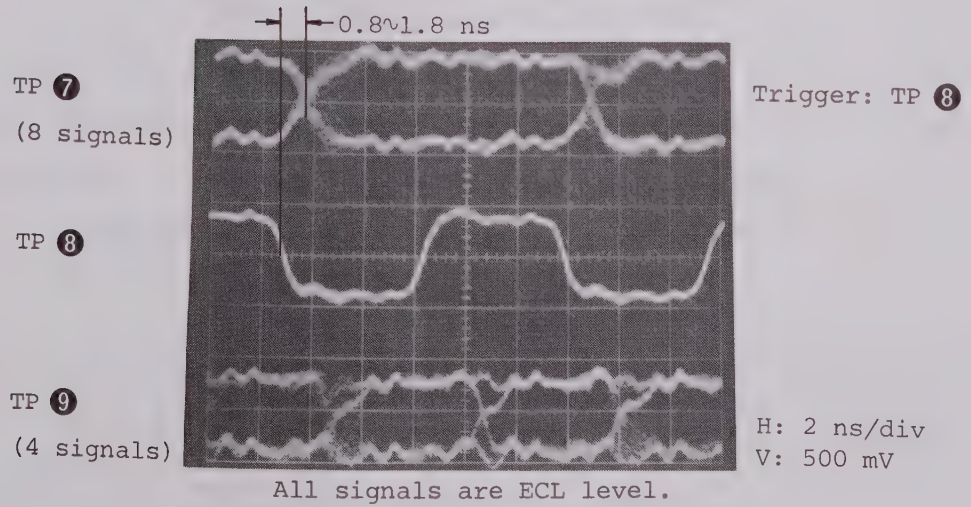

Fig. 3-44 TP ❼ to TP ⓬ Waveforms of T-Z2

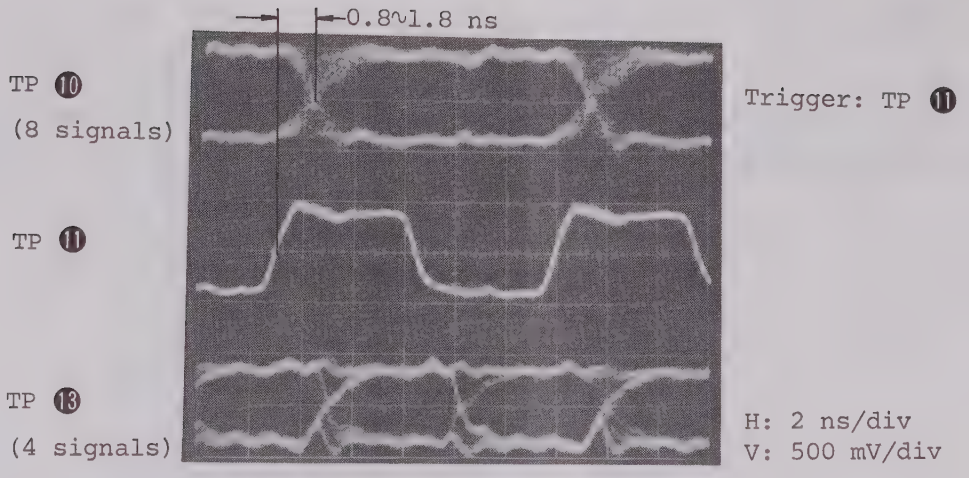

Fig. 3-45 TP ⑩ , TP ⑪ , and TP ⑬ waveforms of T-Z2

If the above waveforms are OK, proceed to the next step.

If not OK, troubleshoot the circuits near the faulty test point.

(d) Step 4

Panel Setting:

CLOCK: INTERNAL 700.000 MHz

PATTERN: Any pattern is OK

ERROR ADDITION: INTERNAL 2×10^{-7} to 2×10^{-3} or SINGLE EXTERNAL

Check the frequency of TP ⑮ error signal using a counter, in accordance with Table 3-13.

Table 3-13 Frequency of TP ⓯ Error Signal

	Panel Setting ERROR ADDITION				
	2×10^{-7}	2×10^{-6}	2×10^{-5}	2×10^{-4}	2×10^{-3}
TP ❺ Frequency (kHz)	0.140	1.40	14.0	140	1400

If the frequencies of TP ⓯ are OK, Z2 is perfect.

If not OK, perform the following test.

Check the control signals of TP ⓭ and TP ⓮ using an oscilloscope or tester. If not OK after performing the above test, troubleshoot the circuits near the faulty test point.

Table 3-14 Control Signals at TP ⓭ and TP ⓮

Panel Setting of ERROR ADDITION	Control Signal (TTL Level)	
	TP ⓭ (Q13-1)	TP ⓮ (Q5-10)
SINGLE	Low	High
INTERNAL 2×10^{-7} to 2×10^{-4}	Low	High
INTERNAL 2×10^{-3}	High	High
EXTERNAL	Low	Low

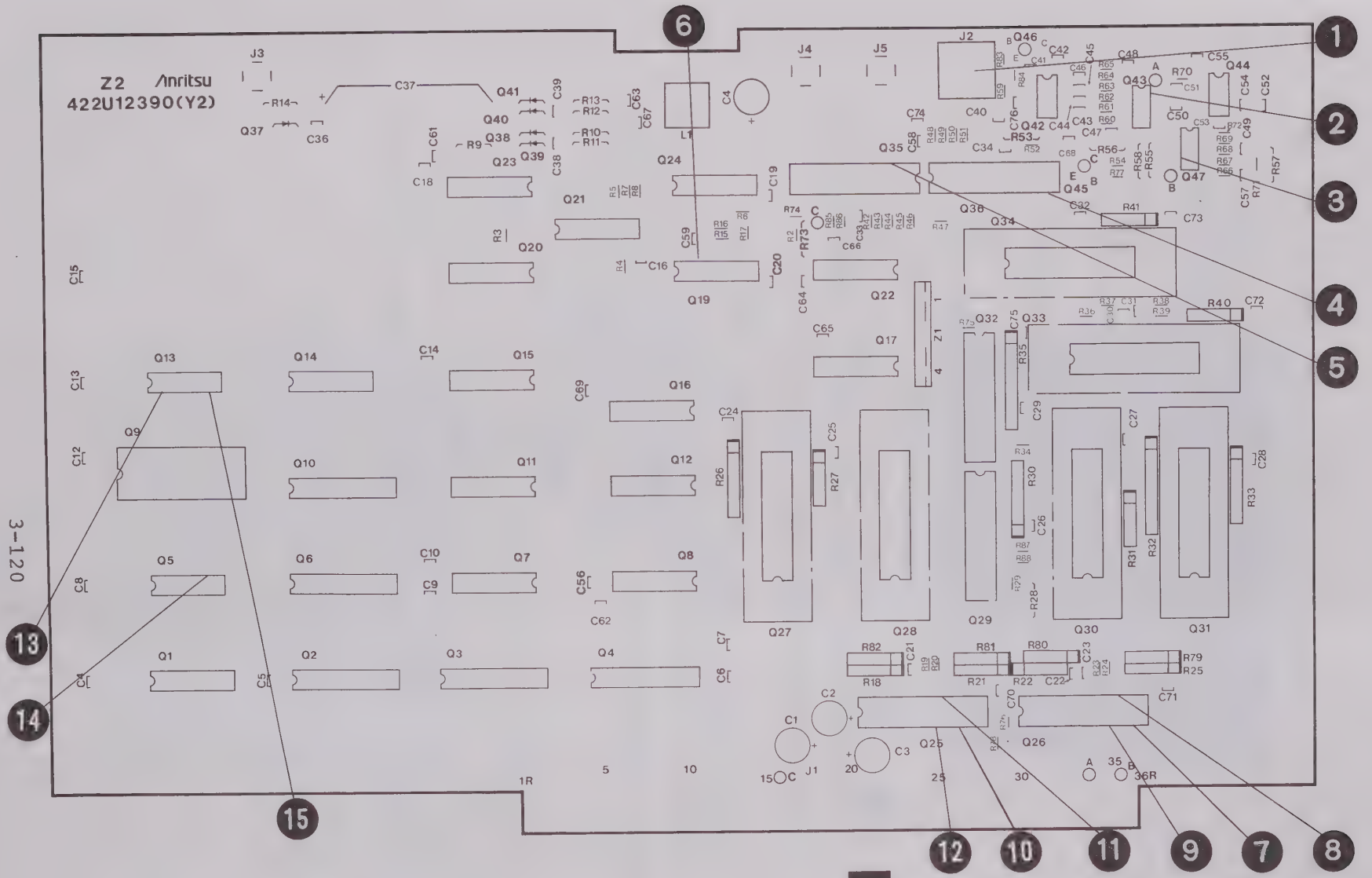

Fig. 3-46 T-Z2 PATTERN GENERATOR-I PC Board 20 Parts Layout

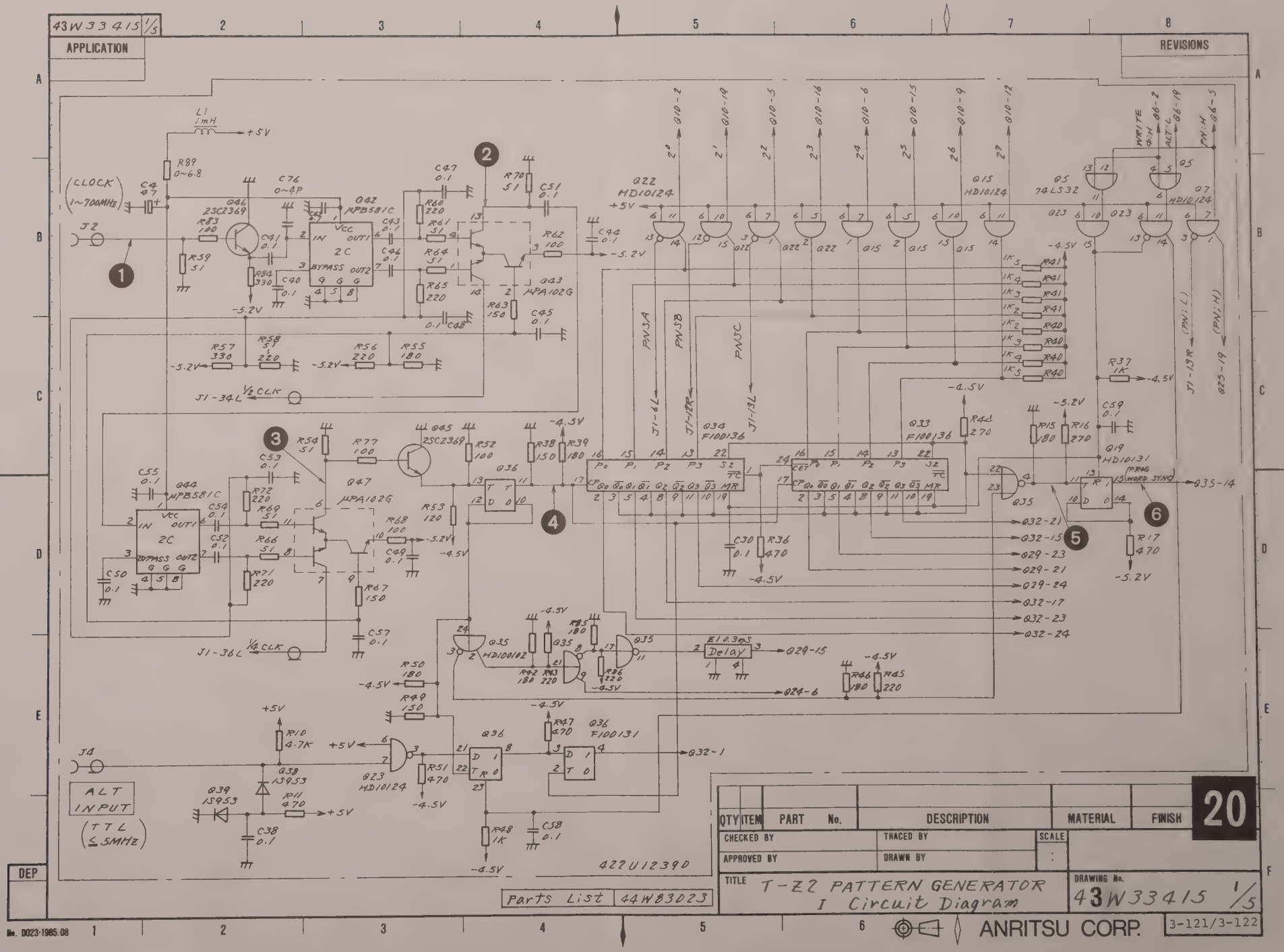
43W33415 1/5
APPLICATION
REVISIONS
CLOCK (1~700MHz)
J2
J4
ALT INPUT (TTL ≤5MHz)
Q46 2SC2369
Q42 μPB581C
Q43 μPA102G
Q44 μPB581C
Q47 μPA102G
Q45 2SC2369
Q22 HD10124
Q15 HD10124
Q5 74LS32
Q7 HD10124
Q34 F100136
Q33 F100136
Q19 HD10131
Q35 HD100102
Q23 HD10124
Q36 F100131
Q38 1S953
Q39 1S953
Delay
PNSA
PNSB
PNSC
J1-34L ½ CLK
J1-36L ¼ CLK
J1-13R (PN: L)
Q25-19 (PN: H)
Q35-14
Q32-21
Q32-15
Q29-23
Q29-21
Q29-24
Q32-17
Q32-23
Q32-24
Q29-15
Q24-6
Q32-1
422U12390
Parts List 44W83023
QTY ITEM PART No. DESCRIPTION MATERIAL FINISH
20
CHECKED BY
TRACED BY
SCALE
APPROVED BY
DRAWN BY
TITLE T-Z2 PATTERN GENERATOR I Circuit Diagram
DRAWING No. 43W33415 1/5
DEP
No. D023-1985.08
ANRITSU CORP.
3-121/3-122

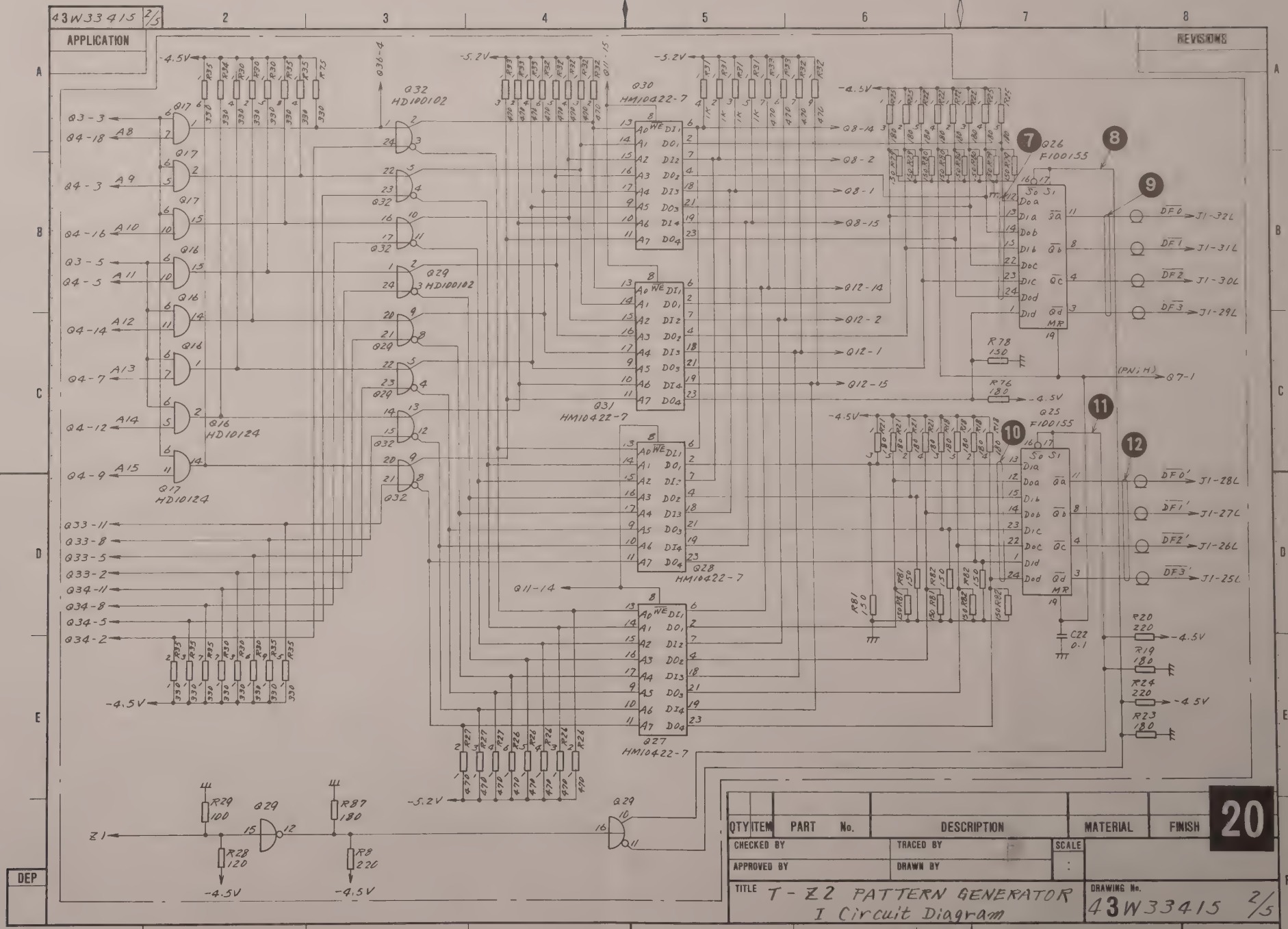
43W33415 2/5
APPLICATION
REVISIONS
Q32 HD100102
Q30 HM10422-7
Q31 HM10422-7
Q28 HM10422-7
Q27 HM10422-7
Q16 HD10124
Q17 HD10124
Q26 F100155
Q25 F100155
Q29 HD100102
DF0 J1-32L
DF1 J1-31L
DF2 J1-30L
DF3 J1-29L
DF0' J1-28L
DF1' J1-27L
DF2' J1-26L
DF3' J1-25L
(PN; H) Q7-1
R78 150
R76 180
R20 220
R19 180
R24 220
R23 180
C22 0.1
R29 100
R28 120
R87 180
R8 220
Z1
-4.5V
-5.2V
DEP
QTY ITEM PART No. DESCRIPTION MATERIAL FINISH
20
CHECKED BY
TRACED BY
SCALE
APPROVED BY
DRAWN BY
TITLE T-Z2 PATTERN GENERATOR I Circuit Diagram
DRAWING No. 43W33415 2/5
No. 0023-1985.08
ANRITSU CORP.
3-123/3-124

APPLICATION

REVISIONS

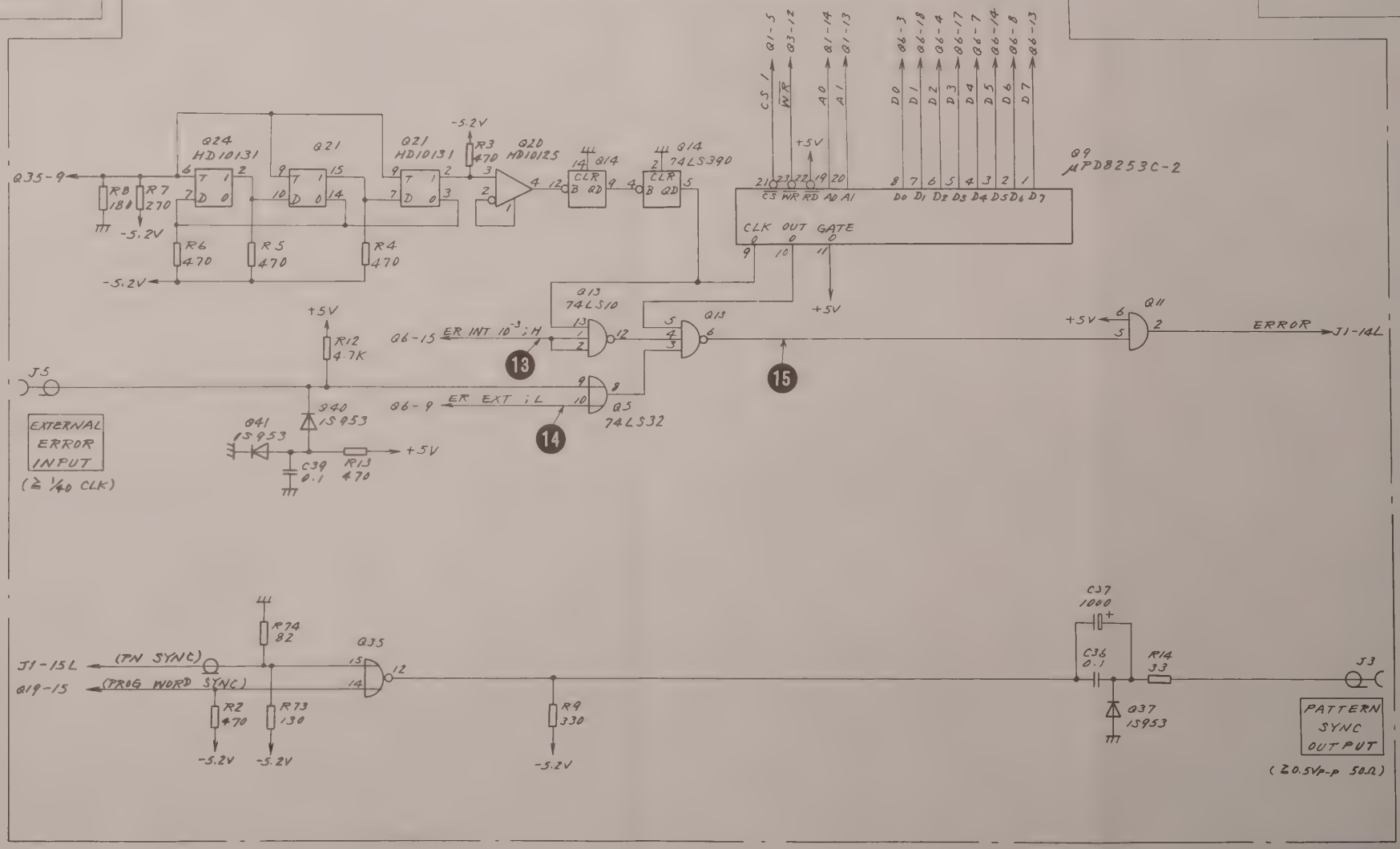

QTY	ITEM	PART No.	DESCRIPTION	MATERIAL	FINISH

CHECKED BY | TRACED BY | SCALE :

APPROVED BY | DRAWN BY

TITLE T-Z2 PATTERN GENERATOR I Circuit Diagram

DRAWING No. 43W33415 3/5

20

DEP

APPLICATION

REVISIONS

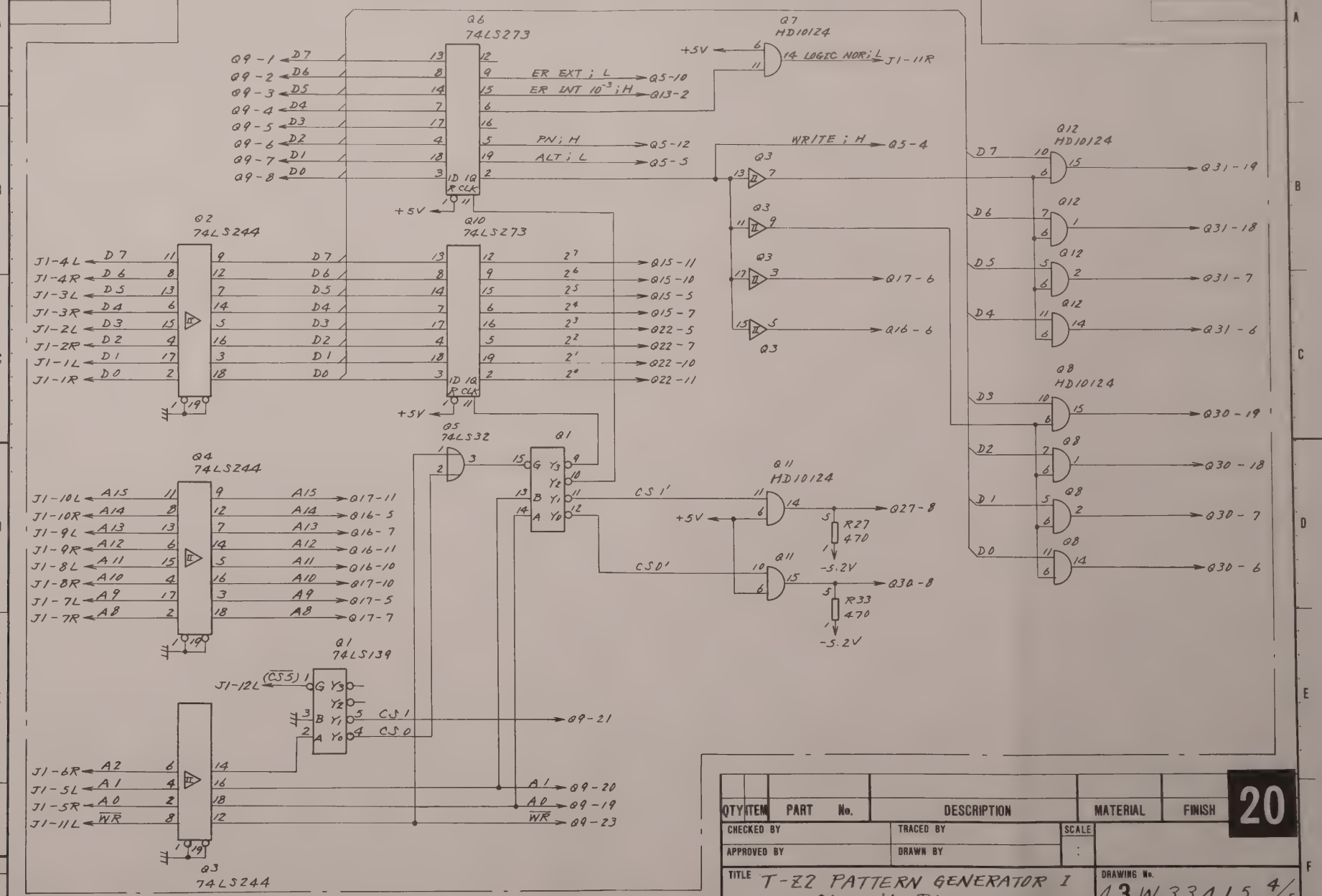

QTY	ITEM	PART No.	DESCRIPTION	MATERIAL	FINISH

20

CHECKED BY	TRACED BY	SCALE
APPROVED BY	DRAWN BY	:

TITLE T-Z2 PATTERN GENERATOR I
Circuit Diagram

DRAWING No. 43W33415 4/5

DEP

APPLICATION

REVISIONS

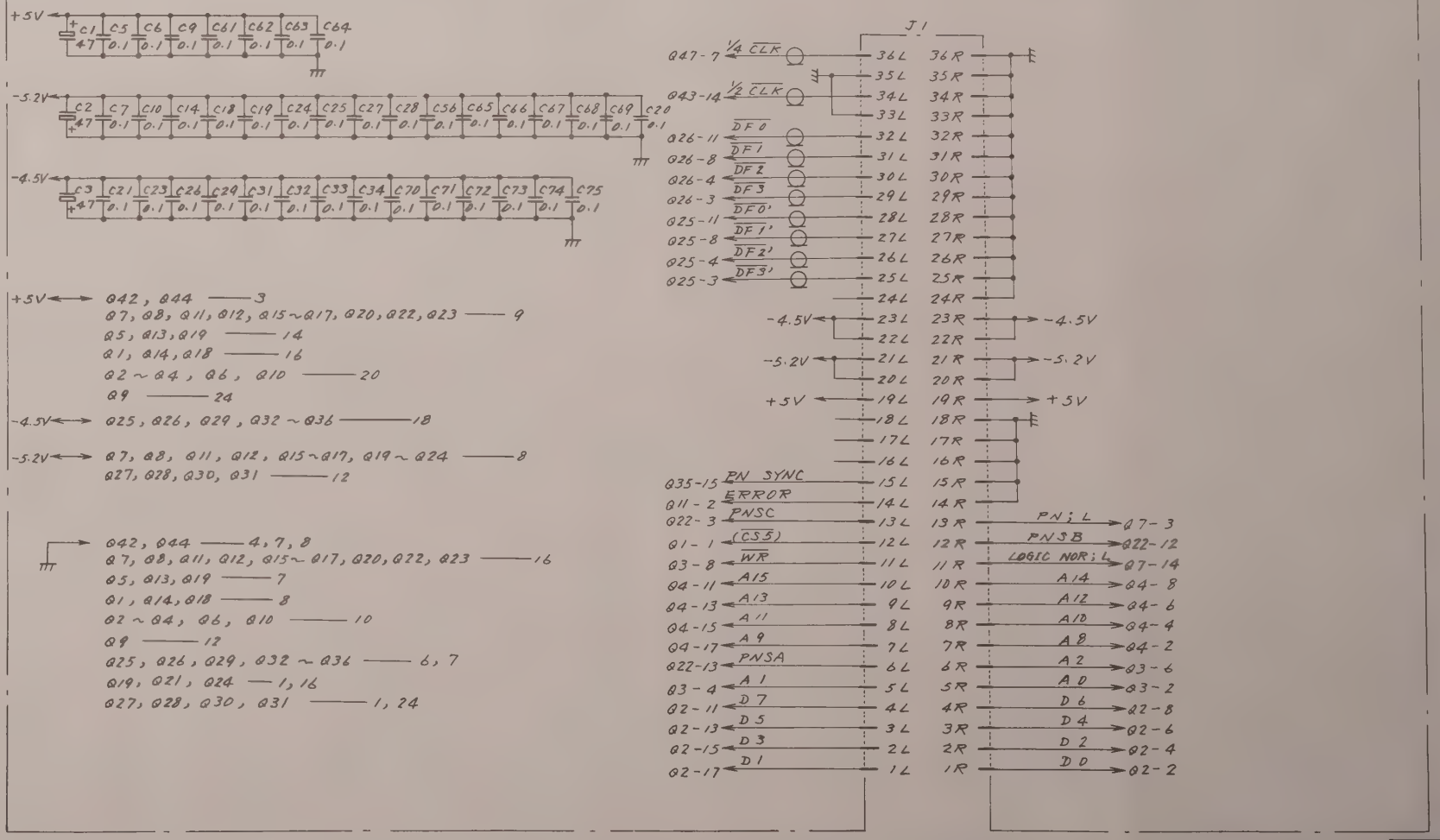

QTY	ITEM	PART No.	DESCRIPTION	MATERIAL	FINISH

CHECKED BY	TRACED BY	SCALE :
APPROVED BY	DRAWN BY	

TITLE T-82 PATTERN GENERATOR I
Circuit Diagram

DRAWING No. 43W33415 5/5

20

DEP

3.5.5 T-Z3 PATTERN GENERATOR-II PC board 21

(1) Circuit description

Figure 3-47 shows the block diagram of this circuit.

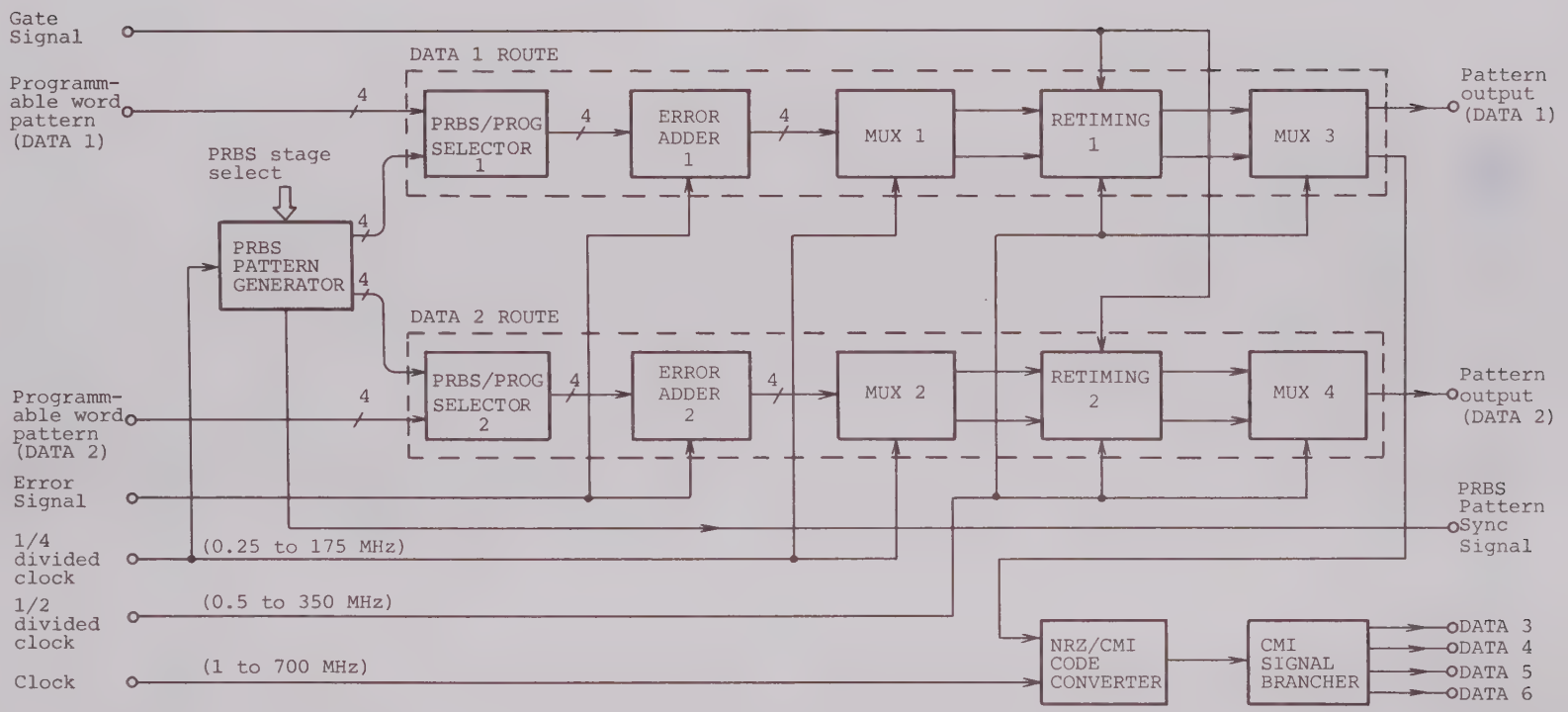

Fig. 3-47 PATTERN GENERATOR-II (T-Z3) Block Diagram

The 1/4 divided clock, 1/2 divided clock, programmable word signals (8 streams), and error signal from PATTERN GENERATOR-I (T-Z2) are input to this circuit.

The 1/4 divided clock is input to PRBS PATTERN GENERATOR. Here, PRBS pattern signals of eight streams are produced having a data bit rate of 1/4 of the final data output. The PRBS stage select signal is applied at this PRBS PATTERN GENERATER and one of four PRBS patterns (7, 10, 15, or 23) can be output.

Four streams each of the eight streams PRBS signals are input to PRBS/PROG SELECTOR-1 and PRBS/ PROG SELECTOR-2 with the PROG signal from PATTERN GENERATOR-I (T-Z2) and one of the input patterns is selected.

The PRBS/PROG SELECTOR-1 and PRBS/PROG SELECTOR-2 outputs are matched with DATA1 and DATA2 OUTPUTs of the front panel output connector, respectively. The required error is added to these pattern signals at ERROR ADDER 1 and ERROR ADDER 2 with the error signals from PATTERN GENERATOR-I (T-Z2). The error added pattern signals and the 1/4 divided clock signal are input to MUX1 and MUX2.

In MUX1 and MUX2, the input four stream pattern signals are multiplexed and two stream pattern signals having a data bit rate of double the input are obtained at the output.

The multiplexed signals are sequentially input to RETIMING 1 and RETIMING 2 and MUX3 and MUX4, respectively.

The 1/2 divided clock is also input to RETIMING 1 and 2 and the phase jitter generated at MUX1 and MUX2 is reduced. A gate signal is also input here. When the gate signal is low level (-1 V/50Ω), the input pattern signal is inhibited. At MUX3 and MUX4, the input two streams pattern signals are multiplexed by the 1/2 divided clock. A one stream pattern signal having a data bit rate of double the input is obtained at the output. The MUX3 and MUX4 output patterns correspond respectively to DATA1 and DATA2 on the front panel and are sent to OUTPUT (T-Z4).

The pattern signal branched from MUX3 and the clock signal from OUTPUT (T-Z4) are input to NRZ/CMI CODE CONVERTER.

In the NRZ/CMI CODE CONVERTER, the signals are converted from NRZ code to CMI code and are branched to four signal routes by the CMI SIGNAL BRANCHER. The CMI signals branched to these four signal routes are output from the panel as DATA3 to DATA6.

(2) Troubleshooting and adjustment

After lifting the T-Z3 PC board using the extender board, perform troubleshooting and adjustment.

(a) STEP 1

Panel setting:

CLOCK: INTERNAL 700.000 MHz

PATTERN: PROGRAMMABLE WORD A
(1/2 MARK RATIO PATTERN) or
PRBS 2^{23}-1

Check the TP ❺ TP ❻ 1/4 bit rate patterns and TP ❼ 1/4 divided CLOCK waveforms and the phase difference between signals by changing the pattern.

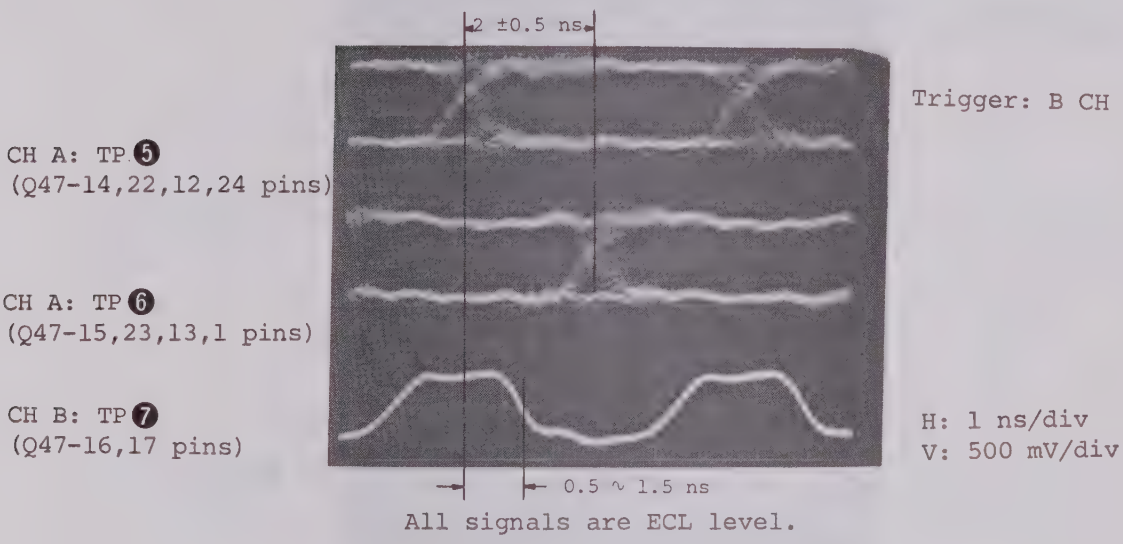

Fig. 3-48 TP ❺ , TP ❻ and TP ❼ Waveforms

If the above waveforms and phase difference are OK, proceed to the next step without performing the following tests.

If not OK, perform the following tests.

1. When the pattern setting is programmable word A, check the TP ❶ and TP ❷ signal waveforms and phase difference.

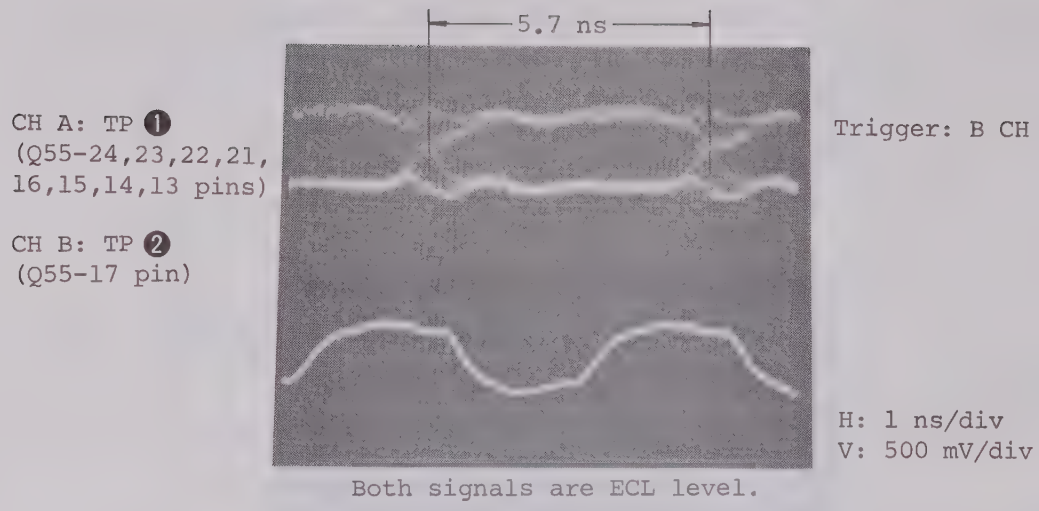

Fig. 3-49 TP ❶ and TP ❷ Waveforms of T-Z3

2. When the pattern setting is PRBS (ex. $2^{23}-1$), check the TP ❸ and TP ❹ signal waveforms.

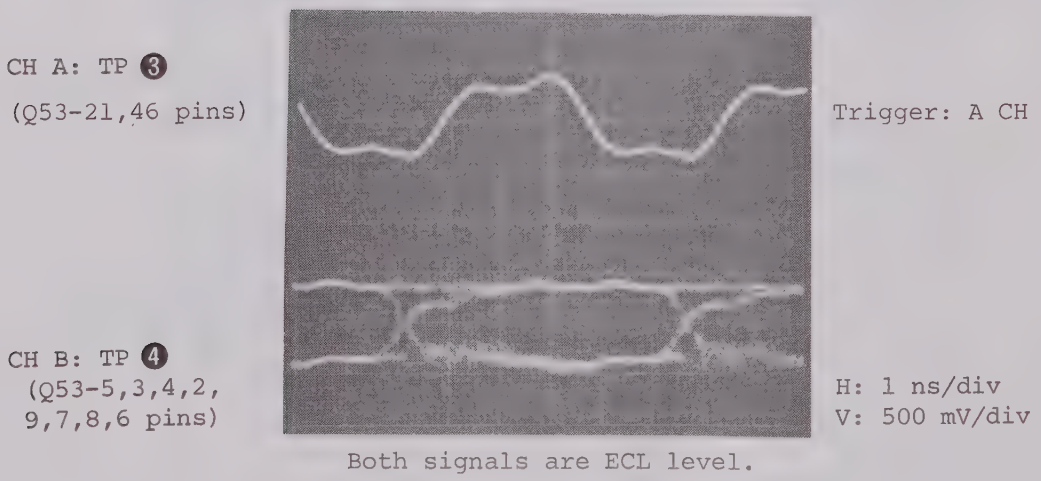

Fig. 3-50 TP ❸ and TP ❹ Waveforms of T-Z3

If not OK after performing the above tests, troubleshoot the circuits near the faulty test point.

(b) Step 2

Panel Setting:

CLOCK: INTERNAL 700.000 MHz

PATTERN: PRBS $2^{23}-1$

Check the TP ⑩ and TP ⑪ signal waveforms by using a sampling oscilloscope.

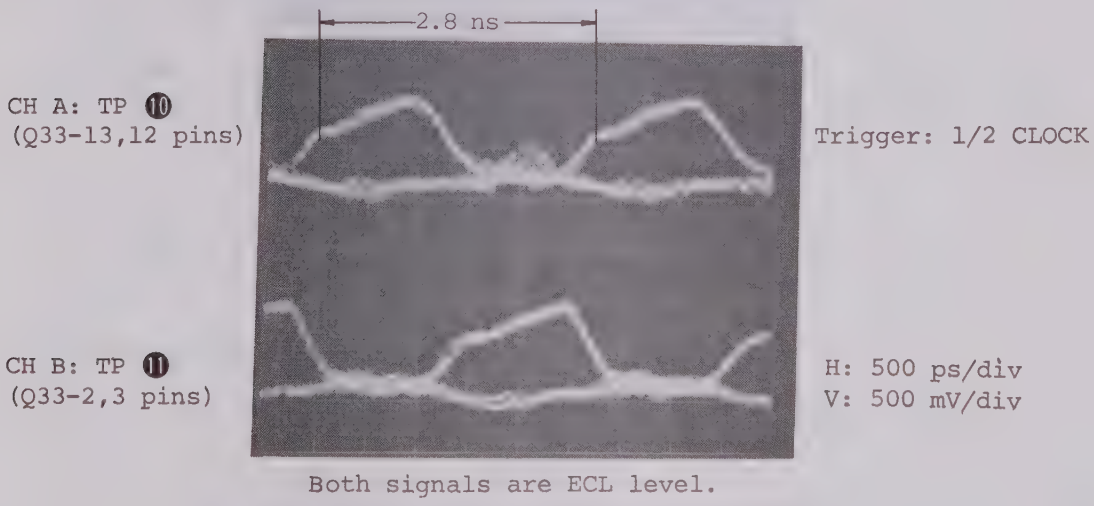

Fig. 3-51 TP ⑩ and TP ⑪ Waveforms of T-Z3

If the above waveforms are OK, proceed to the next step without performing the following tests.

If not OK, perform the following tests.

Check TP ⑧ and TP ⑨ input waveforms of faulty route's D Type Flip Flop.

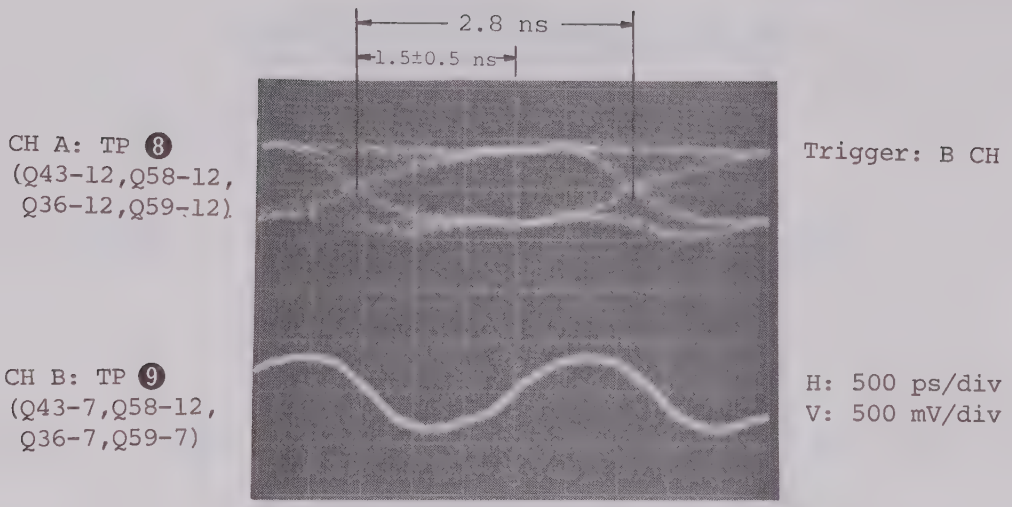

Fig. 3-52 TP ❽ and TP ❾ Waveforms of T-Z3

If not OK after performing the above test, troubleshoot the circuits near the faulty test point.

(c) Step 3

Panel Setting:

CLOCK: Internal 150.000 MHz

PATTERN: PRBS $2^{23}-1$

Check the TP ⓬ and TP ⓭ signal waveforms by using a sampling oscilloscope.

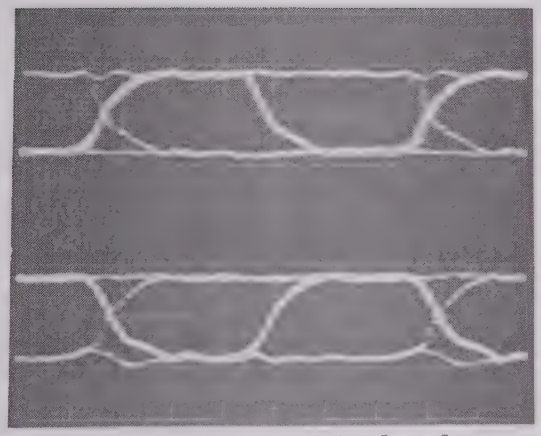

Fig. 3-53 TP ⑫ and TP ⑬ Waveforms of T-Z3

If the above waveforms are OK, Z3 is perfect.

If not OK, perform the following test.

Check the TP ⑭ and TP ⑮ signal waveforms using a sampling oscilloscope.

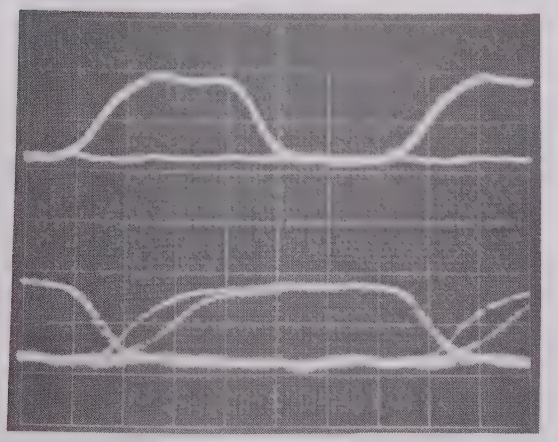

Fig. 3-54 TP ⑭ and TP ⑮ Waveforms of T-Z3

If not OK after performing the above test, troubleshoot the circuits near the faulty test point.

Adjustment procedures are described below.

1. If the output level of DATA3 to DATA6 is not within 1 ±0.1 Vp-p, adjust the resistors as follows:

   R23 --- DATA3 output level adjustment

   R26 --- DATA4 output level adjustment

   R29 --- DATA5 output level adjustment

   R32 --- DATA6 output level adjustment

2. If the RZ part's duty factor of DATA3 to DATA6 (CMI signals) is not within (50 ±5)%, adjust resistor R66.

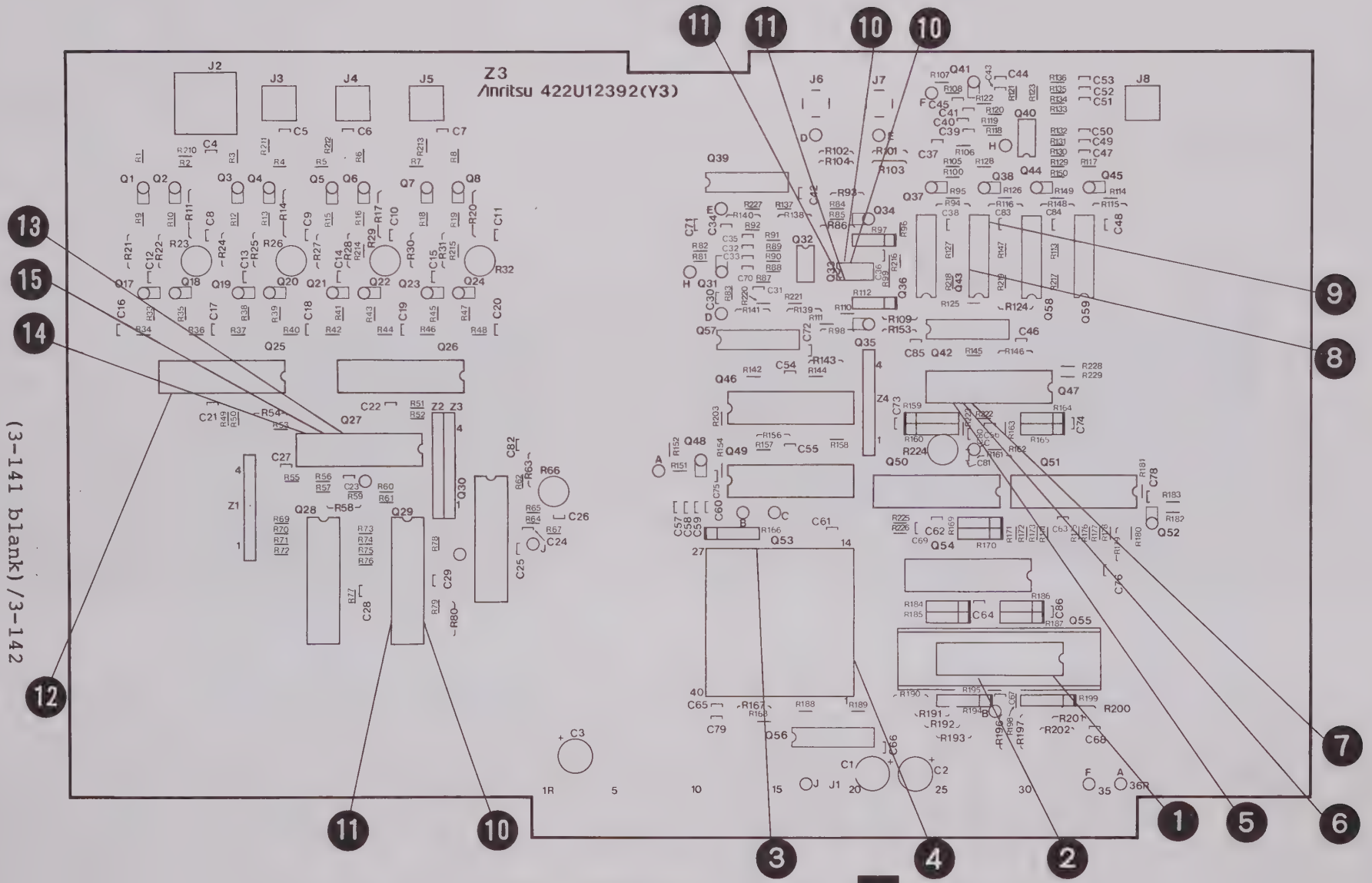

Fig. 3-55 T-Z3 PATTERN GENERATOR-II PC Board 21 Parts Layout

APPLICATION

REVISIONS

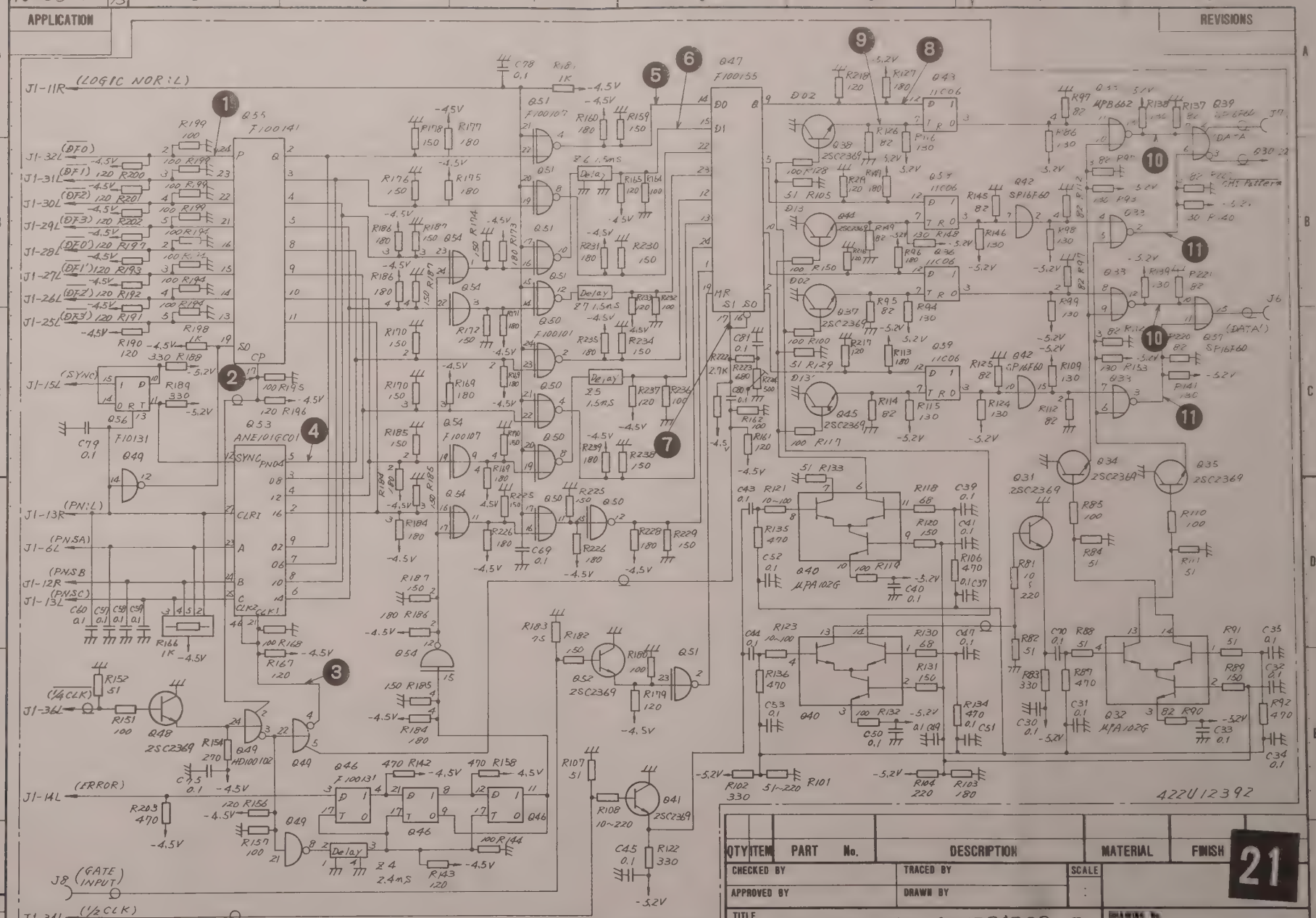

QTY	ITEM	PART No.	DESCRIPTION	MATERIAL	FINISH
CHECKED BY		TRACED BY		SCALE	
APPROVED BY		DRAWN BY		:	

TITLE T-Z3 PATTERN. GENERATOR II Circuit Diagram

DRAWING No. 43W33416 1/3

21

DEP

APPLICATION

REVISIONS

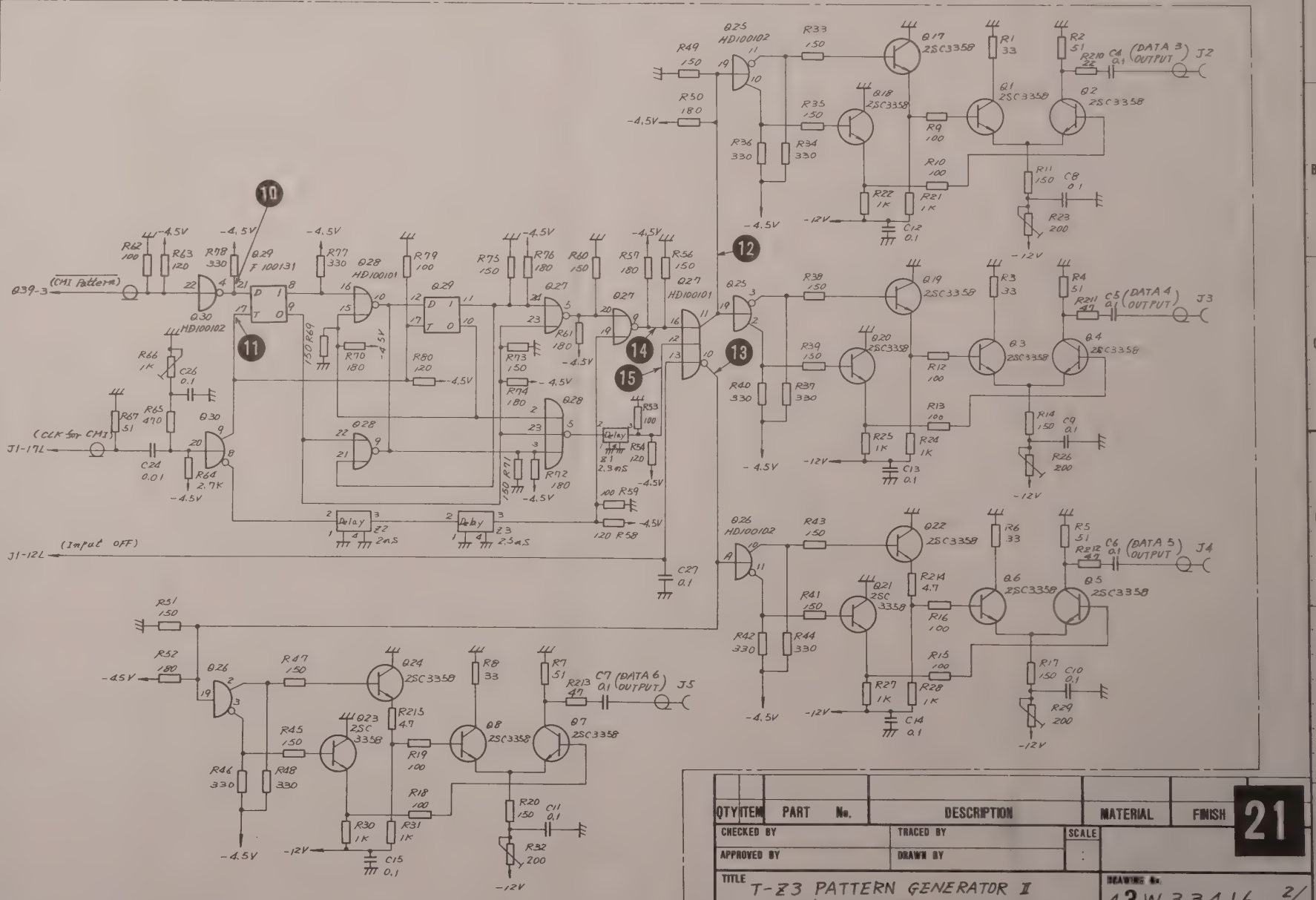

QTY	ITEM	PART No.	DESCRIPTION	MATERIAL	FINISH

CHECKED BY	TRACED BY	SCALE	
APPROVED BY	DRAWN BY	:	

TITLE: T-Z3 PATTERN GENERATOR II Circuit Diagram

DRAWING No. 43W33416 2/3

21

DEP

No. 0023-1985.08

ANRITSU CORP.

3-145/3-146

APPLICATION

REVISIONS

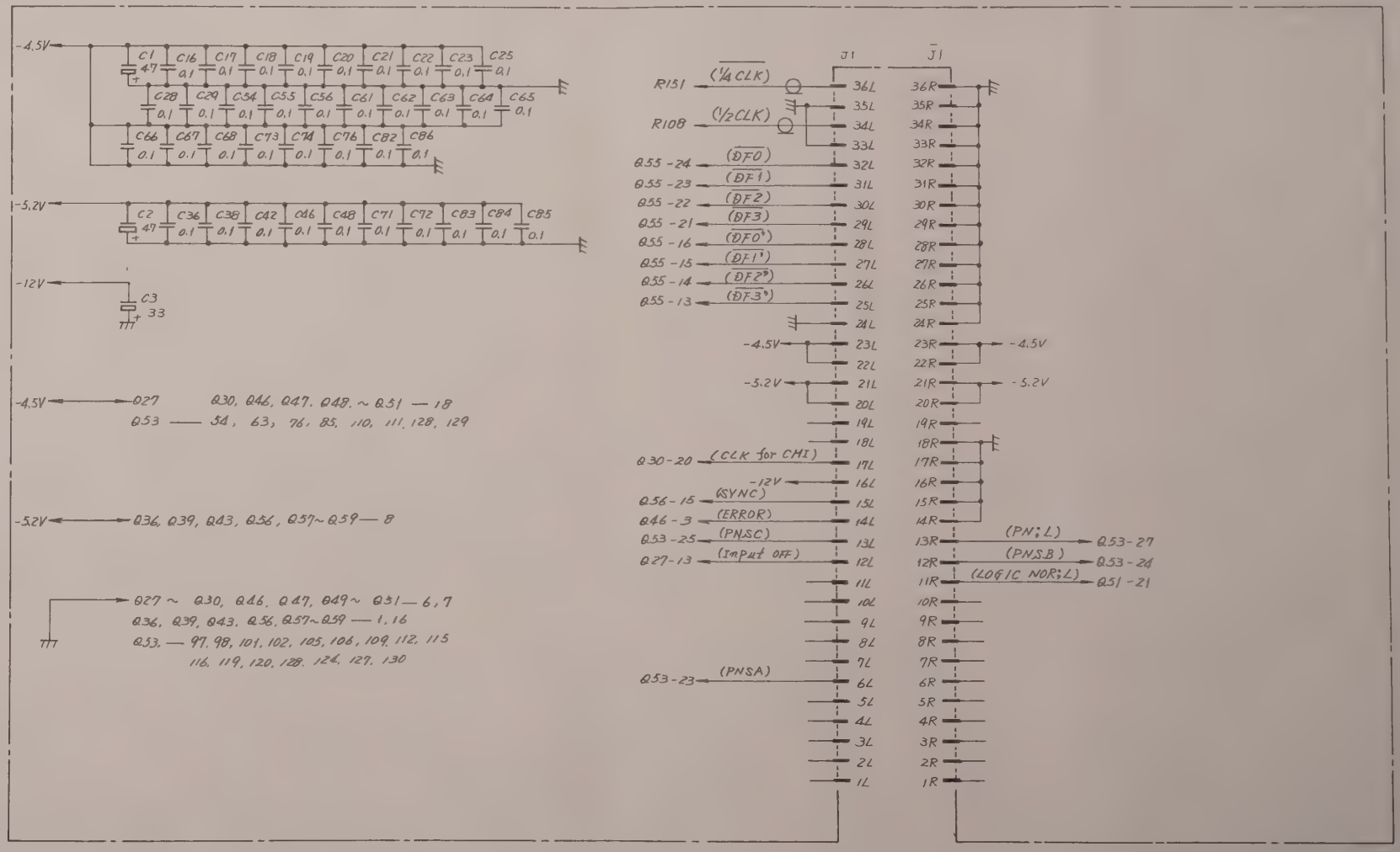

QTY	ITEM	PART No.	DESCRIPTION	MATERIAL	FINISH

21

CHECKED BY	TRACED BY	SCALE :
APPROVED BY	DRAWN BY	

DEP

TITLE: T-BB3 PATTERN GENERATOR II
Circuit Diagram

DRAWING No. 43W33416 3/3

B- 8023-1985.08

3.5.6 T-Z4 OUTPUT PC board 22

(1) Circuit description

Figure 3-56 shows the block diagram of this circuit.

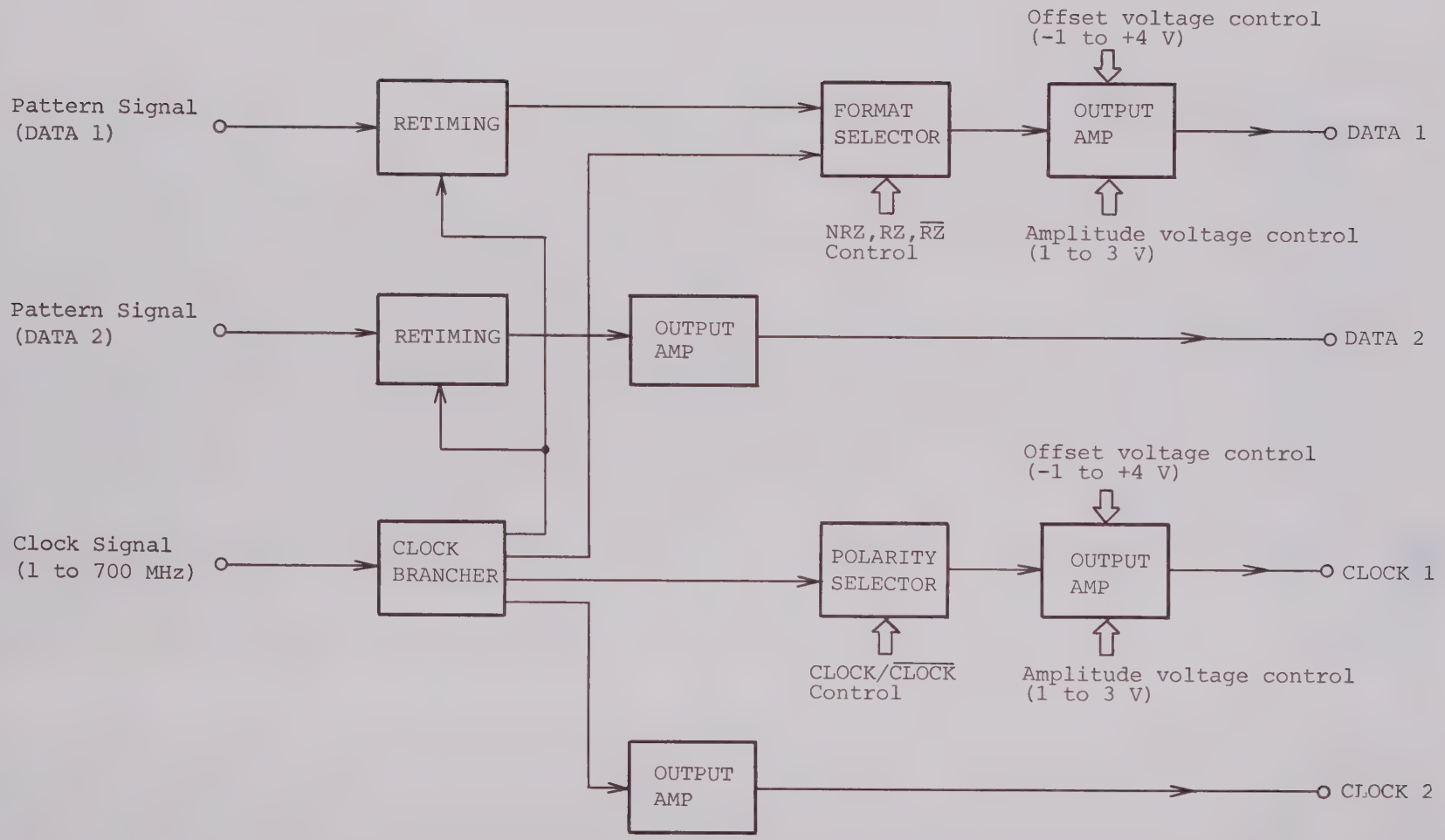

Fig. 3-56 OUTPUT (T-Z4) Block Diagram

The DATA1 and DATA2 pattern signals from PATTERN GENERATOR-II (T-Z3) and the 1 to 700 MHz clock signal from the Synthesizer section (T-Z1) are input to this circuit. The clock signal is branched to four signal routes by the CLOCK BRANCHER. Two of these routes are for clock output. The other two routes are input for the pattern signal RETIMING clock and for NRZ/RZ format selection, respectively. For the CLOCK1 output, CLOCK or $\overline{\text{CLOCK}}$ is selected by POLARITY SELECTOR and input to the OUTPUT AMP. In the CLOCK 1 route OUTPUT AMP, the amplitude voltage (1 to 3 V) and offset voltage (-1 to +4 V) are controlled and the signal is converted to a pulse having the required amplitude voltage and offset voltage, and it is output.

The CLOCK2 output clock is amplified and waveform-shaped by the OUTPUT AMP and is converted to a 0/-1 V fixed level pulse, and it is output.

After the DATA1 pattern signal is retimed, it is input to FORMAT SELECTOR and NRZ, RZ, or $\overline{\text{RZ}}$ code is selected. The selected signal is input to the OUTPUT AMP, the same as CLOCK1, and is converted to a pulse having the required amplitude voltage, and offset voltage and it is output.

The DATA2 pattern signal is amplified and waveform-shaped by OUTPUT AMP and converted to 0/-1 V fixed level pulse and it is output.

(2) Troubleshooting and adjustment

Before troubleshooting or adjusting this board:

1. Disconnect the semirigid cables and connector connecting J6 ∿ J9 of this PC board from the PC board.

2. Disconnect this PC board from the motherboard connector and connect it again to the mother board through an extender board.

(a) DATA1 troubleshooting

(i) Step 1

Panel setting:

CLOCK:	INTERNAL 700.000 MHz
PATTERN:	$2^{23}-1$
ERROR ADDITION:	OFF

Using a sampling oscilloscope, confirm that the TP ❶ and TP ❷ signal waveforms and signal phase relationship are as shown in Fig. 3-57.

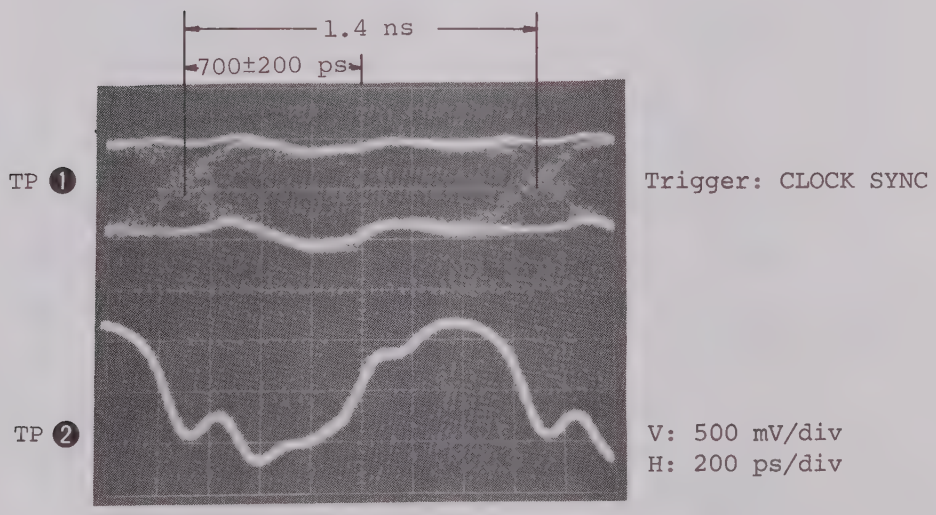

Fig. 3-57 TP ❶ and Tp ❷ Waveforms

If the waveform and phase relationship are OK, proceed to the next step. If not OK, troubleshoot the J2 ∿ TP1 circuit and the circuit near Q151.

(ii) Step 2

Panel Setting:

CLOCK:	INTERNAL 700.000 MHz
PATTERN:	$2^{23}-1$
ERROR ADDITION:	OFF
Format:	NRZ or RZ ($\overline{RZ}$)

Using a sampling oscilloscope, observe the TP ❻ signal waveform and check that it becomes as shown in Fig. 3-58 when FORMAT is set to NRZ and RZ ($\overline{RZ}$).

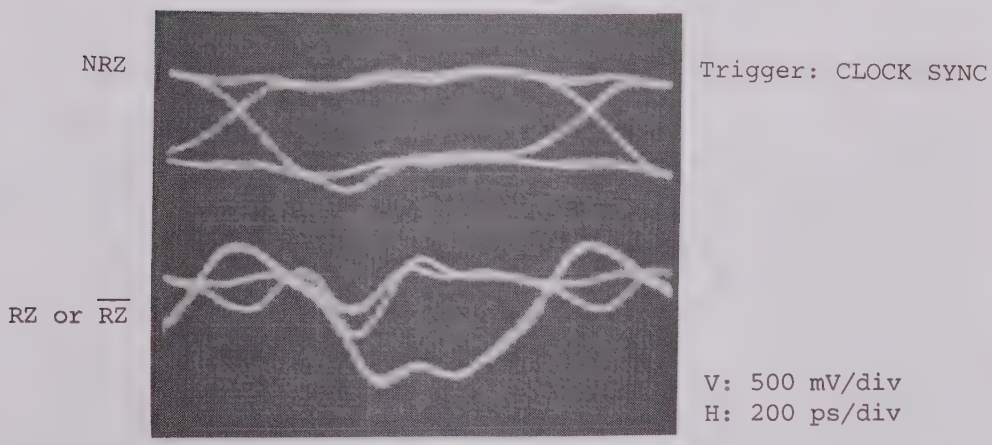

Fig. 3-58 TP ❻ Waveforms

If the waveform is OK, proceed to the next step. If not, perform the following tests in order:

1. Confirm that an NRZ (ECL level) pattern is present at TP ❸ . If not present, check Q148 and the circuit near it.

2. Confirm that an NRZ patter is present at TP ❹ . If not, check Q147, Q114, and the circuit near them.

3. Confirm that the following signal is present at TP ❺ . If not, troubleshoot the circuit near Q173.

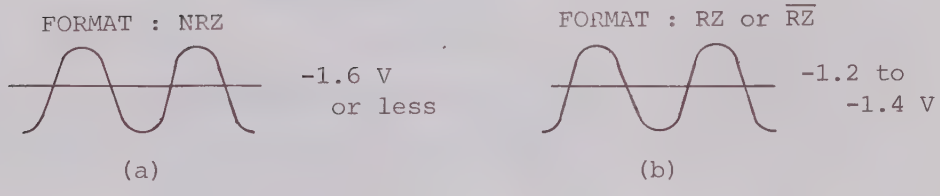

Fig. 3-59 TP ❺ Waveforms

(iii) Step 3

Panel setting:

CLOCK:	INTERNAL 700.000 MHz
PATTERN:	A (1/2 MARK RATIO PATTERN)
LOGIC:	LOGIC
ERROR ADDITION:	OFF
FORMAT:	NRZ, RZ, $\overline{RZ}$

Using a sampling oscilloscope, observe the TP ❼ signal waveform and confirm that it becomes as shown in Fig. 3-60 when FORMAT is set to NRZ, RZ, and $\overline{RZ}$.

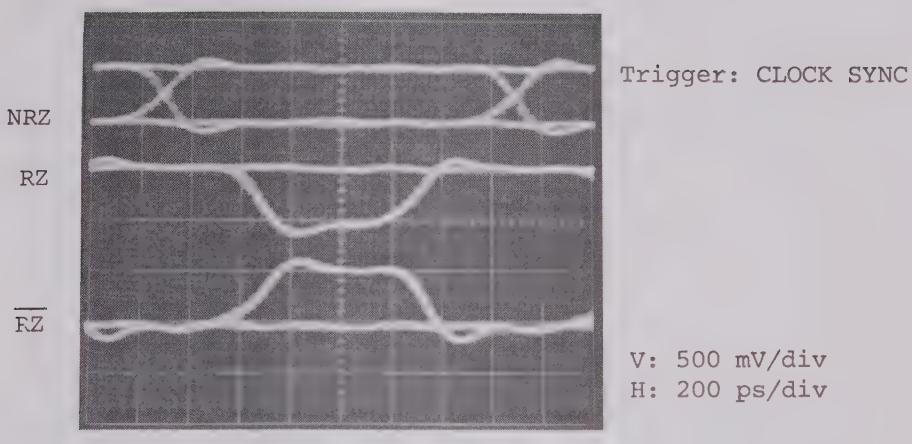

Fig. 3-60 TP ❼ Waveforms

If the waveform is OK, proceed to the next step. If not OK, make the following checks:

1. Change FORMAT sequentially and measure the dc voltage at the following points with a multimeter:

Table 3-15

FORMAT setting	Test point	
	Q67-1	Q67-4
NRZ	-4 V or less	-2.5 ±0.5 V
RZ	-4 V or less	-2.5 ±0.5 V
$\overline{RZ}$	-2.5 ±0.5 V	-4 V or less

2. Troubleshoot the circuit near Q72 and Q61 to Q67.

(iv) Step 4

Panel setting:

CLOCK: INTERNAL 700.000 MHz

PATTERN: $2^{23}-1$

FORMAT: NRZ

AMPLITUDE: 1 or 3 V

OFFSET: 0 V

Measure the voltage at the following test points with a multimeter:

Table 3-16

AMPLITUDE setting	Test point	
	TP ❾	TP ⓫ , ⓬
1.00 V	+0.5 V	-2.2 to -2.8 V
3.00 V	+1.5 V	-4.6 to -5.2 V

Note:

The voltages above are typical values. Tolerance is ±10%.

If the voltages are OK, proceed to the next step. If not OK, make the following checks:

1. If the voltage of TP ❾ is not OK, troubleshoot Q80, Q81, Q120, and the circuit near them.
2. If the voltage of TP ❾ is OK but the voltages of TP ⓫ and TP ⓬ are not OK, troubleshoot Q18 to Q22, Q4, Q5, Q55 to Q58, and the circuit near them.

(v) Step 5

Panel setting:

CLOCK: INTERNAL 700.000 MHz

PATTERN: $2^{23}-1$

FORMAT: NRZ

AMPLITUDE: 3 V

OFFSET: -1 or +4 V

Measure the dc voltages of the following test points with a multimeter and confirm that the values are as shown below.

Table 3-17

OFFSET setting	Test point			
	TP ❽	TP ❾	TP ❿	TP ⓭
-1.00 V	+1.0 V	+1.5 V	+1 V	-2 V
+4.00 V	+6.0 V	+1.5 V	-4 V	+8 V

Note:

The voltages above are typical values. Tolerance is ±10%.

If the dc voltage of each test point is OK, proceed to the next step. If not OK, make the following checks:

1. If the voltage of TP ❿ is not OK, troubleshoot Q80, Q82, Q121, and the circuit near them.
2. If the voltage of TP ❿ is OK and the voltages of TP ⓫ and TP ⓬ are not OK, troubleshoot Q18, Q4, Q5, and the circuit near them.

(vi) Step 6

Panel setting:

CLOCK:	INTERNAL 700.000 MHz
PATTERN:	C (1/8 MARK RATIO PATTERN) or $\overline{C}$ (7/8 MARK RATIO PATTERN)
ERROR ADDITION:	OFF
FORMAT:	NRZ, RZ, or $\overline{RZ}$
AMPLITUDE:	3.00 V
OFFSET:	0.00 V

Observe the waveforms of the final system output at J7 with a sampling oscilloscope and check that they become as shown in Fig. 3-61 or Fig. 3-62 when PATTERN is set to C (1/8) or $\overline{C}$ (7/8).

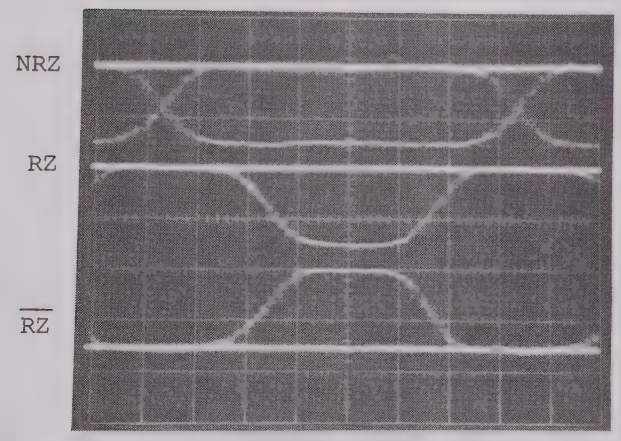

Fig. 3-61 Waveforms at J7 when C (1/8)

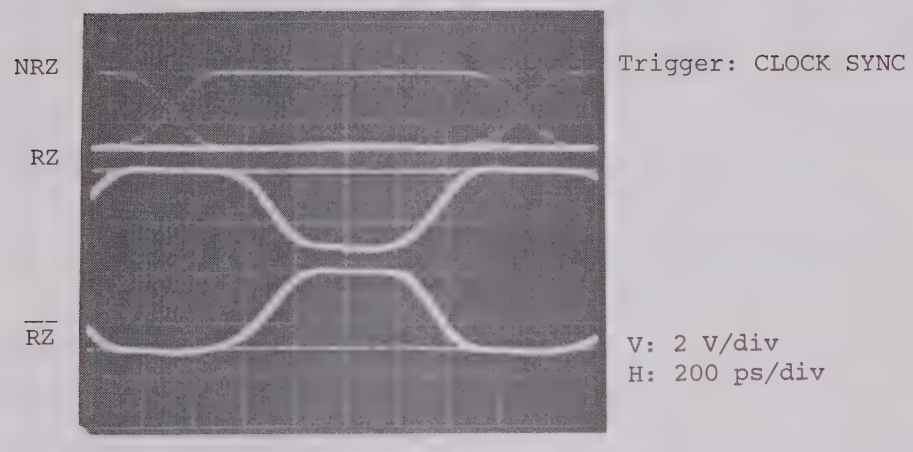

Fig. 3-62 Waveforms at J7 when $\overline{C}$ (7/8)

If OK, troubleshooting is unnecessary. If not OK, troubleshoot Q59, Q60, Q54 to Q58, and the circuit near them.

If the duty factor, amplitude voltage, offset voltage, etc. of the J7 output signal do not satisfy the specifications because of parts aging, etc., adjust them with the following resistors:

1. NRZ pattern duty factor adjustment: R299
2. RZ or $\overline{RZ}$ pattern duty factor adjustment: R91
3. Output amplitude adjustment: R61
4. Offset voltage adjustment

   -1 V (MIN. value) adjustment: R120
   +4 V (MAX. value) adjustment: R121

(b) DATA2 troubleshooting

(i) Step 1

Pattern setting:

CLOCK:	INTERNAL 700.000 MHz
PATTERN:	$2^{23}-1$
ERROR ADDITION:	OFF

Using a sampling oscilloscope, confirm that the TP ⑭ and TP ⑮ signal waveforms and the phase relationship of the two signals are as shown in Fig. 3-63.

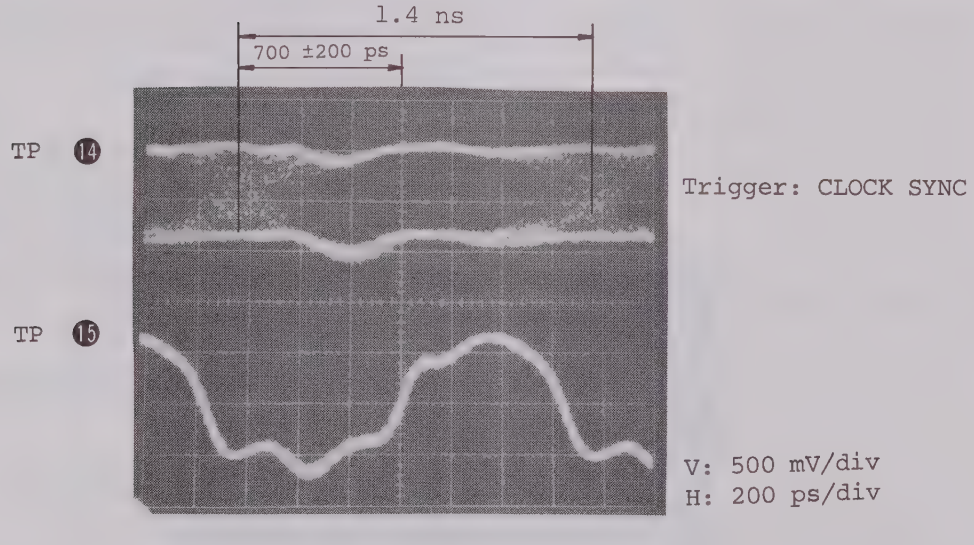

Fig. 3-63

If the waveforms and phase relationship are OK, proceed to the next step.

If not OK, make the following tests:

1. If the duty factor of the NRZ pattern at TP ⑭ is not OK, adjust it with R378.

2. If the threshold voltages of TP ⓮ and TP ⓯ change widely, adjust them with R420 and R371.

3. If the duty factory and threshold voltage are not OK even when steps 1 and 2 are performed, troubleshoot the circuit near J3 ∿ TP14 and Q162.

(ii) Step 2

Panel setting:

CLOCK:	INTERNAL 700.000 MHz
PATTERN:	C (1/8 MARK RATIO PATTERN) or $\overline{C}$ (7/8 MARK RATIO PATTERN)
ERROR ADDITION:	OFF

Observe the waveform of the final output at J9 with a sampling oscilloscope and confirm that they are as shown in Fig. 3-64 when PATTERN is set to C (1/8) or $\overline{C}$ (7/8).

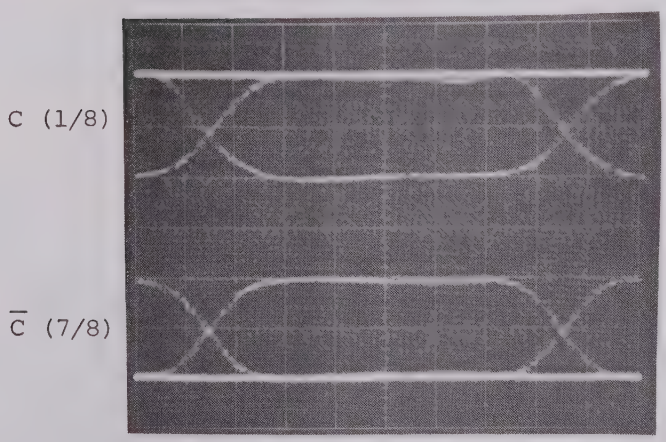

Fig. 3-64 J9 Output Waveforms

If the waveform is OK, troubleshooting is unnecessary.

If not OK, make the following tests:

1. Confirm that an NRZ pattern (ECL level) is present at TP ⑯ . If not present, troubleshoot Q144 and the circuit near it.

2. Confirm that an NRZ pattern (0/-2 V) is present at TP ⑰ . If not present, troubleshoot Q143, Q109, Q110, Q105, Q106, and the circuit near them.

3. If TP ⑯ and TP ⑰ are OK but the output of J9 is not OK, troubleshoot Q103, Q104, Q101, Q102, Q100, and the circuit near them.

4. If the duty factor and amplitude voltage of the J9 output signal do not satisfy the specifications because of parts aging, etc., adjust them with the following resistors:

   Duty factor adjustment: R456
   Output amplitude adjustment: R362

(c) CLOCK1 troubleshooting

(i) Step 1

Panel setting:

CLOCK: INTERNAL 700.000 MHz

Observe TP ⑱ and TP ⑲ with a sampling oscilloscope and confirm that the signal waveforms are as shown in Fig. 3-65.

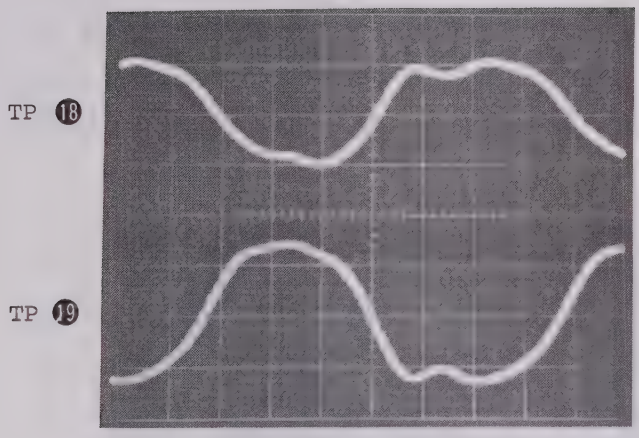

Fig. 3-65

If the waveforms are OK, proceed to the next step. If not OK, make the following checks or adjustments:

1. Confirm that the level of Q138-pin 2 is ECL level LOW.

   If High, the Synthesizer section U1-Z1 is probably faulty. Troubleshoot as described in paragraph 3.5.3 (2).

2. If the duty factors at TP ⑱ and TP ⑲ are worse than that of the clock signal input at J4, adjust it with R346.

(ii) Step 2

Panel setting:

CLOCK: INTERNAL 700.000 MHz

POLARITY: CLOCK or $\overline{\text{CLOCK}}$

AMPLITUDE: 3.00 V

Observe TP ㉑ with a sampling oscilloscope and confirm that its output waveform is as shown in Fig. 3-66 when POLARITY is set to CLOCK or $\overline{\text{CLOCK}}$.

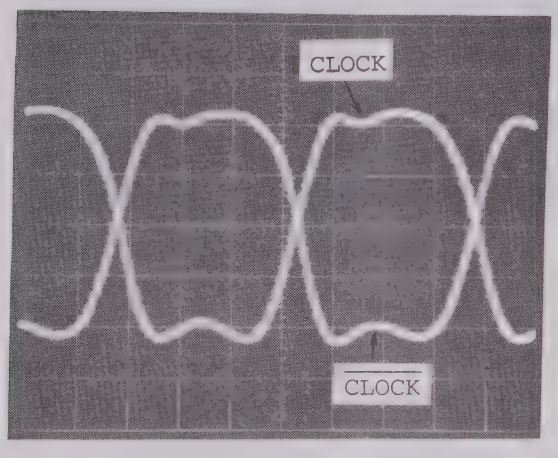

Fig. 3-66 TP ㉑ Output Waveform

If the waveform is OK, proceed to the next step. If not OK, make the following checks or adjustments:

1. Switch POLARITY to CLOCK or $\overline{\text{CLOCK}}$ and measure the dc voltages shown below with a multimeter.

Table 3-18

POLARITY setting	Test point	
	Q96-1	Q96-4
CLOCK	-4 V or less	-2 ±0.5 V
$\overline{\text{CLOCK}}$	-2 ±0.5 V	-4 V or less

2. Troubleshoot the Q125 to Q48 and Q49 signal route.

(iii) Step 3

Panel setting:

CLOCK: INTERNAL 700.000 MHz

POLARITY: CLOCK

AMPLITUDE: 1 or 3 V

OFFSET: 0 V

Measure the dc voltage of the following points with a multimeter, etc.

Table 3-19

AMPLITUDE setting	Test point	
	TP ㉕	TP ㉒
1.00 V	+0.5 V	-2.25 to -2.75 V
3.00 V	+1.5 V	-4.25 to -4.75 V

Note:

The voltages above are typical values. Tolerance is ±10%.

If the voltages are OK, proceed to the next step. If not OK, make the following checks:

1. If the voltage of TP ㉕ is not OK, troubleshoot Q77, Q78, Q118, and the circuit near them.
2. If the voltage of TP ㉒ is not OK, troubleshoot Q11 to Q15, Q27 to Q30, and the circuit near them.

(iv) Check 4

Panel setting:

CLOCK: INTERNAL 700.000 MHz

POLARITY: CLOCK

AMPLITUDE: 3 V

OFFSET: -1 or +4 V

Measure the dc voltage of the following points with a multimeter, etc.

Table 3-20

OFFSET setting	Test point			
	TP ㉔	TP ㉕	TP ㉖	TP ㉓
-1.00 V	+1.0 V	+1.5 V	+1 V	-2 V
+4.00 V	+6.0 V	+1.5 V	-4 V	+8 V

Note:

The voltages above are typical values. Tolerance is 10%.

If the dc voltage of each test point is OK, proceed to the next step. If not OK, make the following checks:

1. If the voltage of TP ㉔ is not OK, troubleshoot Q77, Q79, Q119, and the circuit near them.
2. If the voltage of TP ㉔ is OK but the voltage of TP ㉓ is not OK, troubleshoot Q15, Q2, Q3, Q1, Q9, and the circuit near them.

(v) Step 5

Panel setting:

CLOCK:	INTERNAL 700.000 MHz
POLARITY:	CLOCK or $\overline{\text{CLOCK}}$
AMPLITUDE:	3.00 V
OFFSET:	0.00 V

Observe the waveforms of the final output at J6 with a sampling oscilloscope and confirm that they are as shown in Fig. 3-67 when POLARITY is set to CLOCK or $\overline{\text{CLOCK}}$.

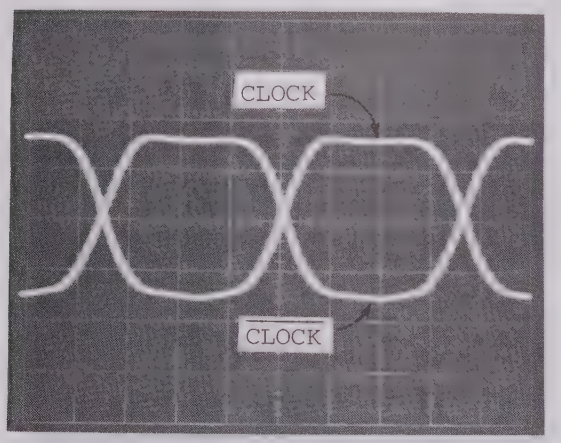

By 50 Ω Sampling Oscilloscope with probe of Table 3-2 (7)

SYNC: CLOCK SYNC

V: 1 V/div
H: 200 ps/div

Fig. 3-67 J6 Output Waveforms

If the waveform is OK, troubleshooting is unnecessary. If not OK, troubleshoot Q26, Q32, Q27 to Q30, and the circuit near them.

If the duty factor, amplitude voltage, offset voltage, etc. of the J6 output signal does not satisfy the specifications because of parts aging, etc., adjust them with the following resistors:

1. Clock waveform duty factor adjustment: R496

2. Output amplitude adjustment: R95

3. Offset voltage adjustment

   -1 V (MIN. value) adjustment: R99
   +4 V (MAX. value) adjustment: R100

(d) CLOCK2 troubleshooting

Panel setting:

CLOCK: INTERNAL 700.000 MHz

Observe the output waveform at J8 with a sampling oscilloscope and confirm that it is as shown in Fig. 3-68.

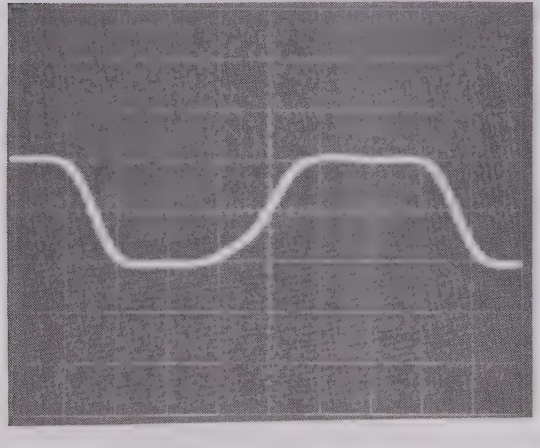

By 50 Ω Sampling Oscilloscope with probe of Table 3-2 (7)

SYNC: CLOCK SYNC

V: 0.5 V/div
H: 200 ps/div

Fig. 3-68 J7 Output Waveform

If the waveform is OK, troubleshooting is unnecessary. If it is not OK, troubleshoot the Q135 to J8 signal route. If the duty factor, amplitude voltage, etc. of the J8 output signal does not satisfy the specifications because of parts aging, etc., adjust them with the following resistors:

1. Duty factor adjustment: R482

2. Output amplitude adjustment: R138

(e) Other adjustment points

Measure the dc voltages of TP ㉘ and TP ㉙ with a multimeter, etc. If the measured value differs from the standard value by more than ±10%, adjust it with the following resistors:

Table 3-21

	Test point		
	TP ㉘	TP ㉙	(LOAD 75 Ω)
Standard voltage	-3.5 V	-2.0 V	
Adjustment resistor	R23	R22	

When measuring the voltage of TP ㉙ , set the front panel LOAD switch to 75 Ω.

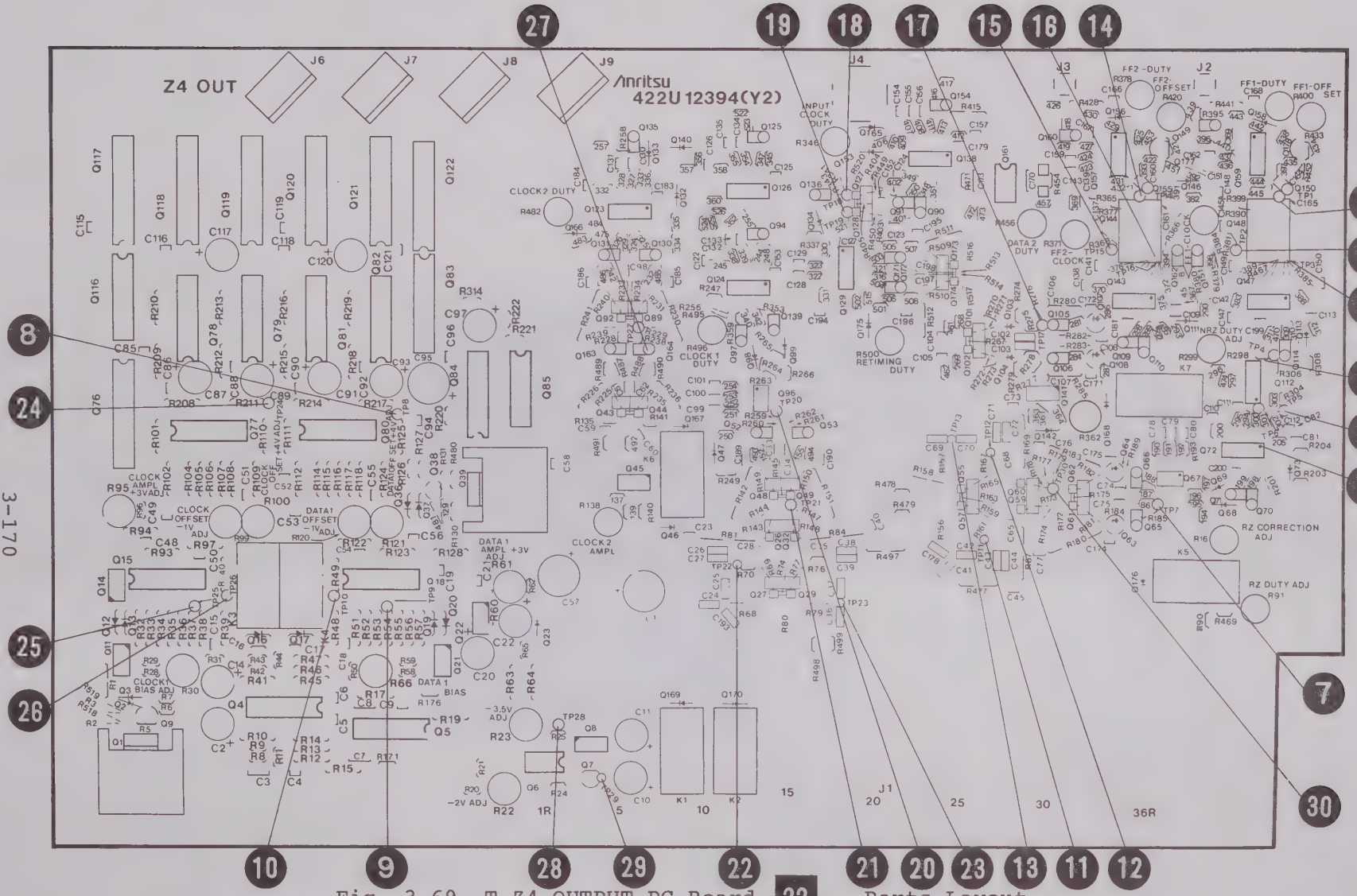

Fig. 3-69 T-Z4 OUTPUT PC Board 22 Parts Layout

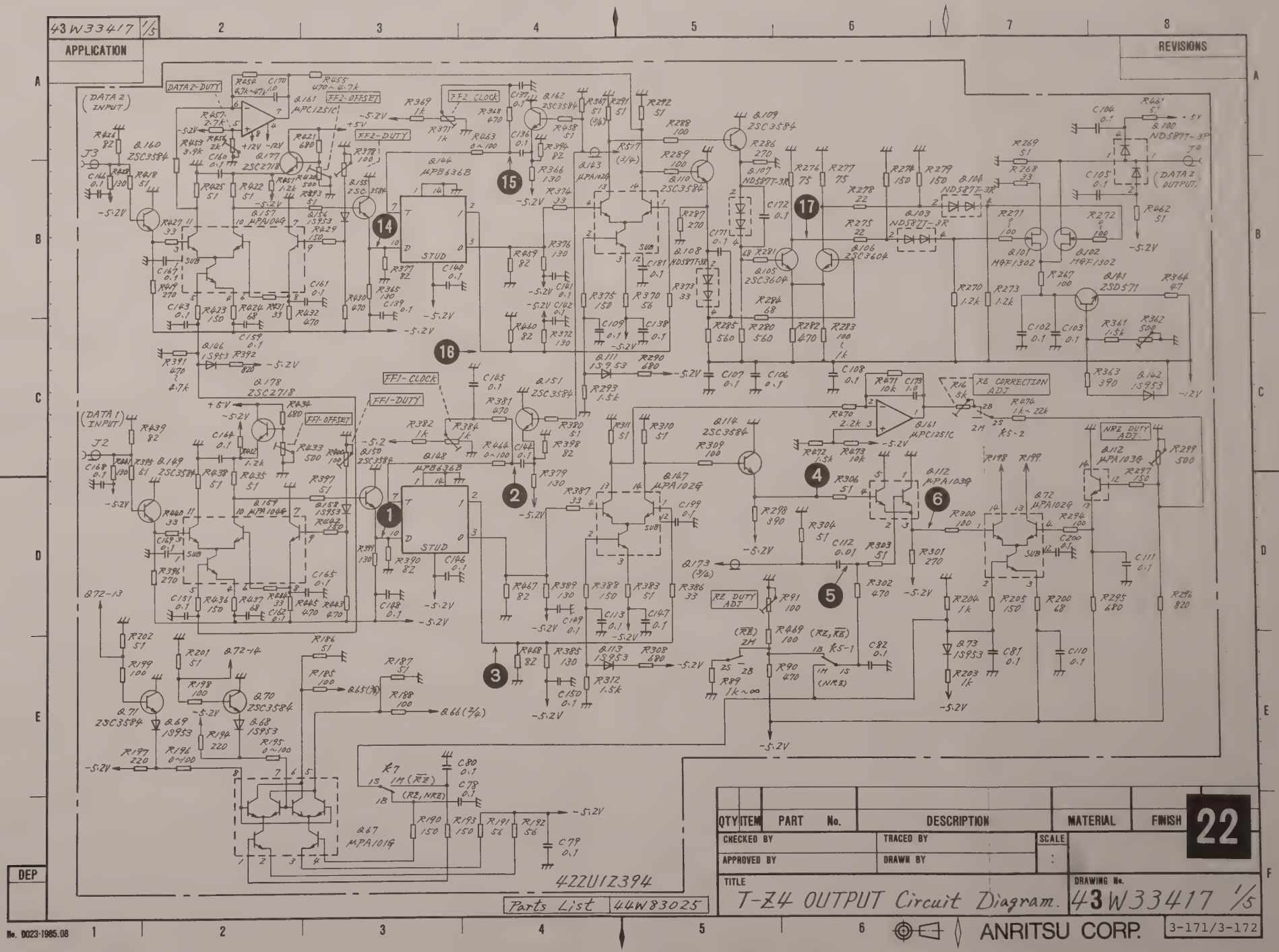
43W33417 1/5
APPLICATION
REVISIONS
DEP
DATA 2 INPUT
DATA 2-DUTY
FF2-OFFSET
FF2-DUTY
FF2 CLOCK
FF1-CLOCK
FF1-DUTY
FF1-OFFSET
DATA 1 INPUT
DATA 2 OUTPUT
RZ CORRECTION ADJ
NRZ DUTY ADJ
RZ DUTY ADJ
STUD
422U12394
Parts List 44W83025
QTY ITEM PART No. DESCRIPTION MATERIAL FINISH
22
CHECKED BY
TRACED BY
SCALE
APPROVED BY
DRAWN BY
TITLE
T-Z4 OUTPUT Circuit Diagram.
DRAWING No.
43W33417 1/5
ANRITSU CORP.
3-171/3-172
No. 0023-1985.08

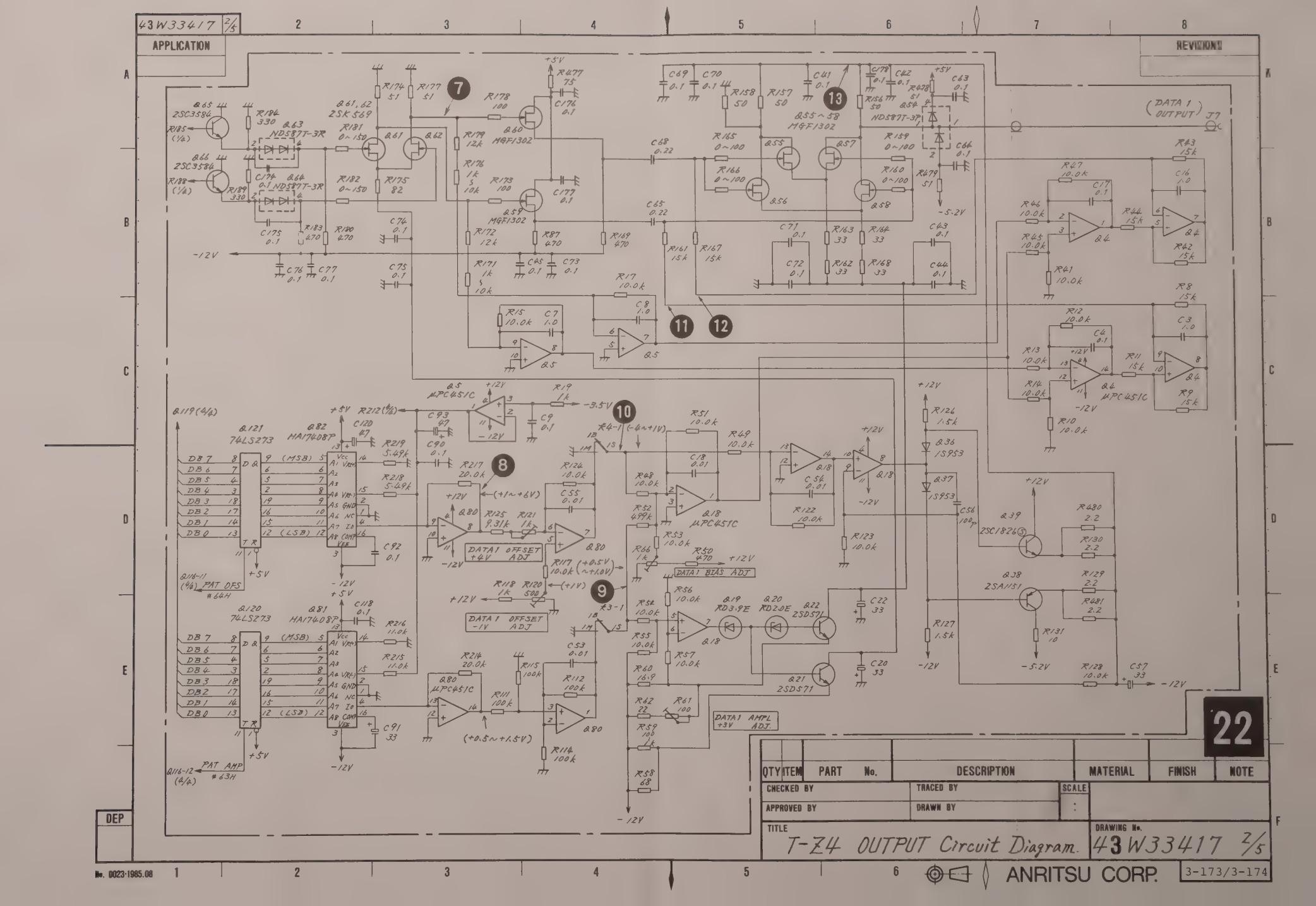
43W33417 2/5
APPLICATION
REVISIONS
DEP
(DATA 1 OUTPUT) J7
DATA1 OFFSET +4V ADJ
DATA1 OFFSET -1V ADJ
DATA1 BIAS ADJ
DATA1 AMPL +3V ADJ.
PAT OFS #64H
PAT AMP #63H
22
QTY ITEM PART No. DESCRIPTION MATERIAL FINISH NOTE
CHECKED BY
TRACED BY
SCALE
APPROVED BY
DRAWN BY
TITLE
T-Z4 OUTPUT Circuit Diagram.
DRAWING No.
43W33417 2/5
No. 0023-1985.08
ANRITSU CORP.
3-173/3-174

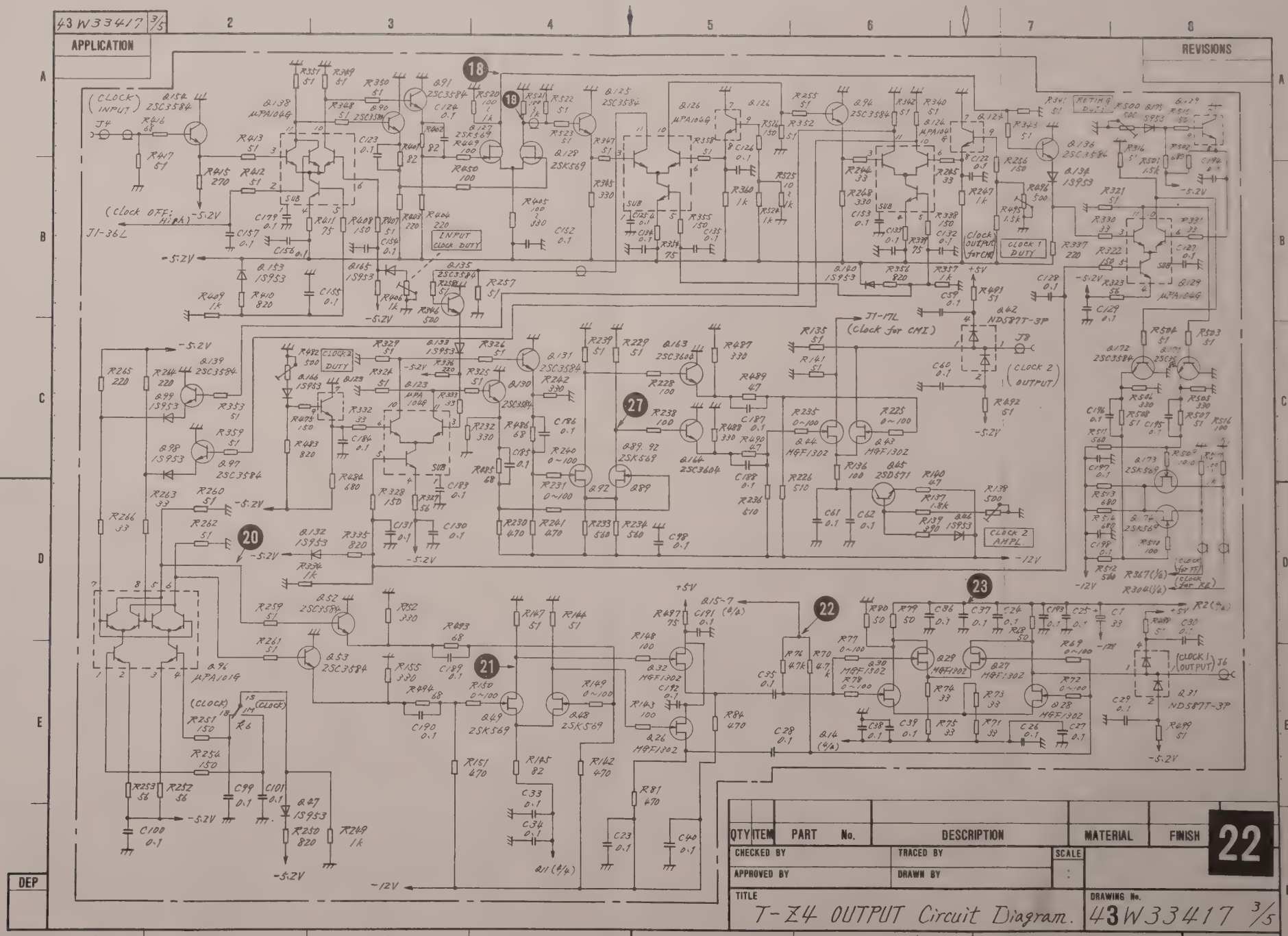
43W33417 3/5
APPLICATION
REVISIONS
DEP
(CLOCK INPUT)
(Clock OFF: High)
J1-36L
INPUT CLOCK DUTY
CLOCK 1 DUTY
CLOCK 2 DUTY
CLOCK 2 OUTPUT
CLOCK 2 AMPL.
J1-17L (Clock for CMI)
(CLOCK 1 OUTPUT)
(CLOCK for FF)
(CLOCK for RZ)
(CLOCK)
RETIMG DUTY
Clock output for CMI
Q42 ND587T-3P
Q31 ND587T-3P
Q96 μPA1014
Q47 1S953
Q45 2SD571
Q44 MGF1302
Q43 MGF1302
Q32 MGF1302
Q26 MGF1302
Q29 MGF1302
Q27 MGF1302
Q28 MGF1302
Q30 MGF1302
Q49 2SK569
Q48 2SK569
Q89, 92 2SK569
Q164 2SC3604
Q163 2SC3604
Q138 μPA1049
Q124 μPA1049
Q129 μPA1049
Q136 2SC3584
Q134 1S953
Q135 2SC3584
Q91 2SC3584
Q90 2SC3584
Q94 2SC3584
Q125 2SC3584
Q126 μPA1049
Q128 2SK569
Q127 2SK569
Q131 2SC3584
Q130 2SC3584
Q133 1S953
Q132 1S953
Q52 2SC3584
Q53 2SC3584
Q139 2SC3584
Q97 2SC3584
Q98 1S953
Q99 1S953
Q153 1S953
Q140 1S953
Q141 1S953
Q172 2SC3584
Q173 2SK569
Q174 2SK569
Q15-7 (4/4)
Q14 (4/4)
Q11 (4/4)
Q11 (4/4)
R2 (4/4)
R367 (1/4)
R304 (1/4)
-5.2V
-12V
+5V
18
19
20
21
22
23
27
QTY
ITEM
PART No.
DESCRIPTION
MATERIAL
FINISH
22
CHECKED BY
TRACED BY
SCALE
APPROVED BY
DRAWN BY
TITLE
T-Z4 OUTPUT Circuit Diagram.
DRAWING No.
43W33417 3/5
No. D023-1985.08
ANRITSU CORP.
3-175/3-176

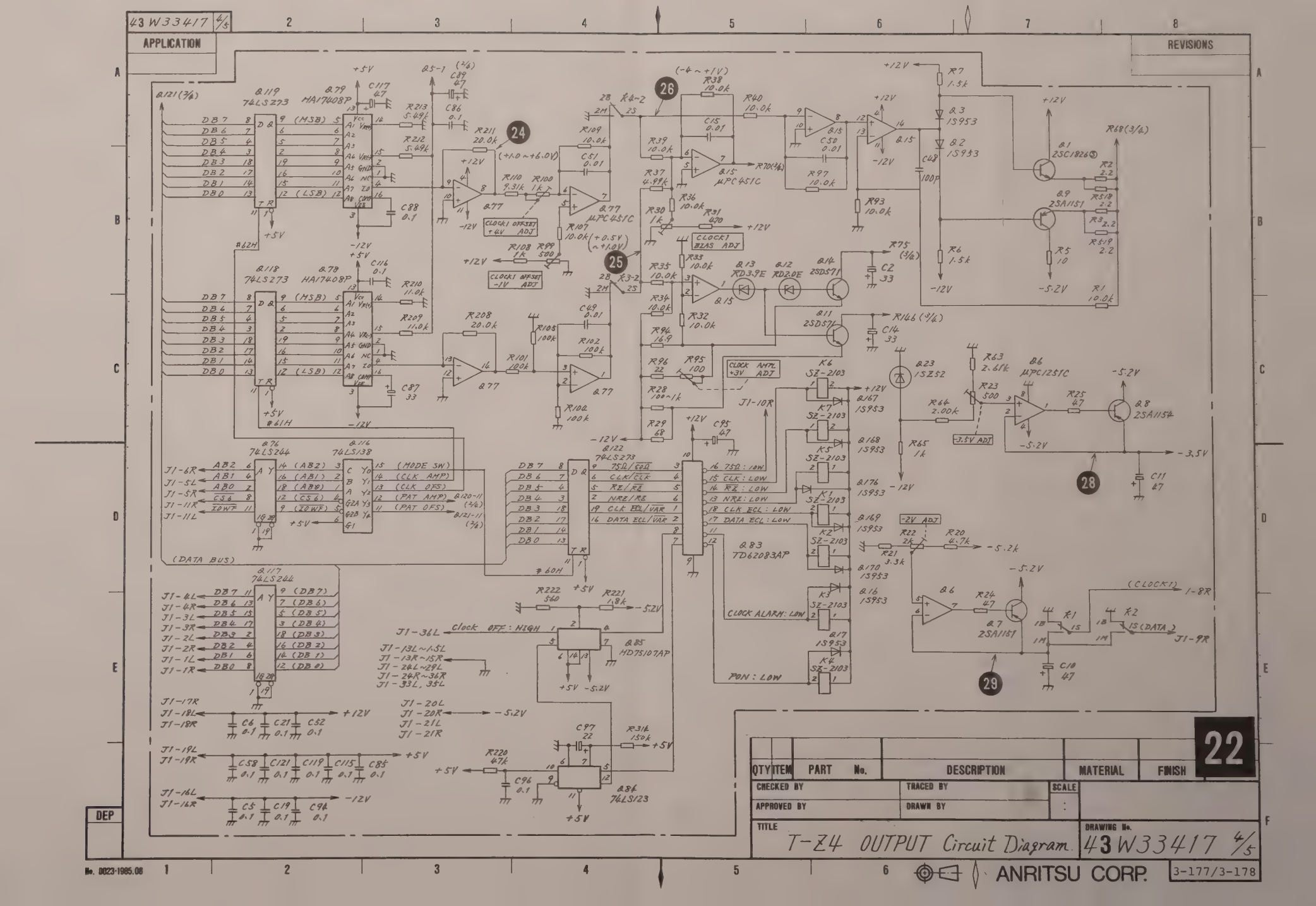
43 W33417 4/5
APPLICATION
REVISIONS
(DATA BUS)
CLOCK OFF : HIGH
CLOCK ALARM: LOW
PON : LOW
CLOCK1 OFFSET +4V ADJ
CLOCK1 OFFSET -1V ADJ
CLOCK1 BIAS ADJ
CLOCK AMPL +3V ADJ
-3.5V ADJ
-2V ADJ
74LS273
74LS244
74LS138
HA17408P
μPC451C
μPC1251C
TD62083AP
HD75107AP
74LS123
2SC1826
2SA1151
2SD571
RD3.9E
RD2.0E
1SZ52
1S953
SZ-2103
T-Z4 OUTPUT Circuit Diagram.
43 W33417 4/5
ANRITSU CORP.
3-177/3-178
DEP
No. 0023-1985.08

APPLICATION

REVISIONS

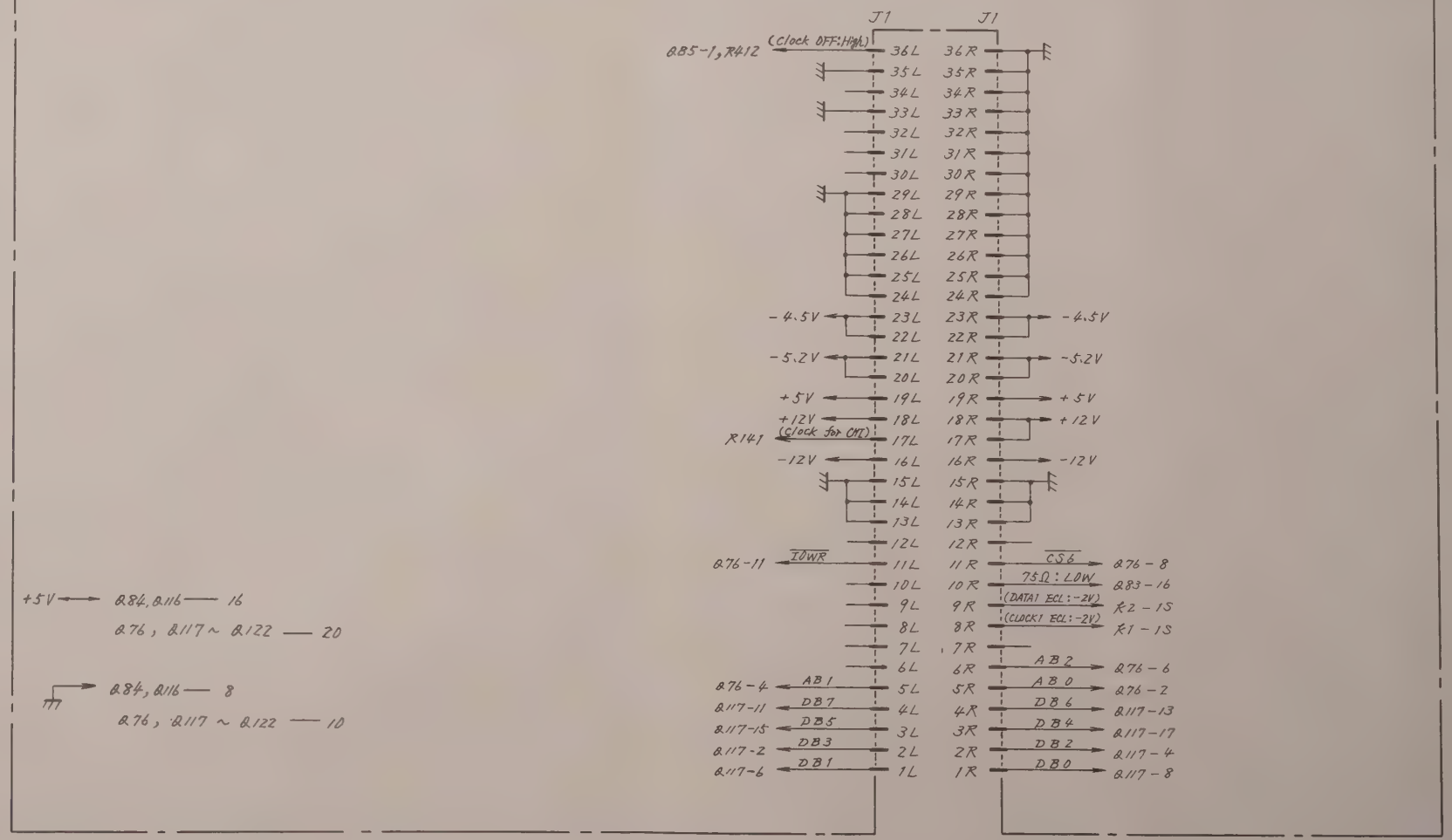

QTY	ITEM	PART No.	DESCRIPTION	MATERIAL	FINISH

CHECKED BY	TRACED BY	SCALE	
APPROVED BY	DRAWN BY	:	

TITLE: T-Z4 OUTPUT Circuit Diagram.

DRAWING No. 43W33417 5/5

22

DEP

ANRITSU CORP.

3-179/3-180

0023-1985.08

3.5.7 T-Z5 CONTROL PC board 23

(1) Troubleshooting

(a) Step 1

Using an oscilloscope, confirm that the signal waveform at TP ❶ is as shown in Fig. 3-70. Using a counter, confirm that the frequency at TP ❶ is 4.000 MHz.

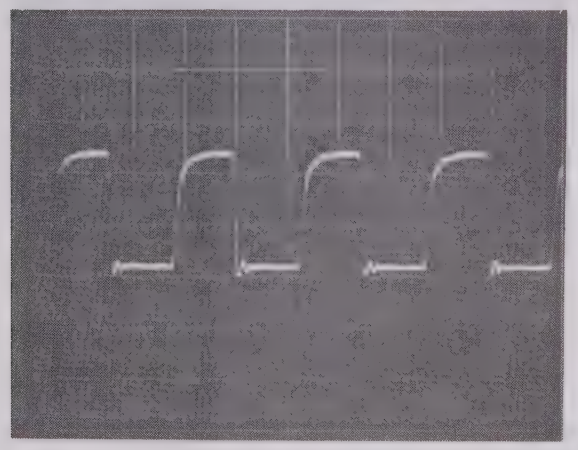

V: 2 V/div
H: 100 ns/div

Fig. 3-70 TP ❶ Waveform

If the waveform and frequency are OK, proceed to the next step. If not OK, troubleshoot the Z1 to TP ❶ signal route.

(b) Step 2

Using an oscilloscope, confirm that the levels of TP ❷ , TP ❸ , and TP ❹ are high level (+3 to +5.5 V). If the levels are OK, proceed to the next step. If not OK, troubleshoot the circuit near TP ❷ , TP ❸ , and TP ❹ .

(c) Step 3

Using an oscilloscope, confirm that the waveform at TP ❺ is as shown in Fig. 3-71.

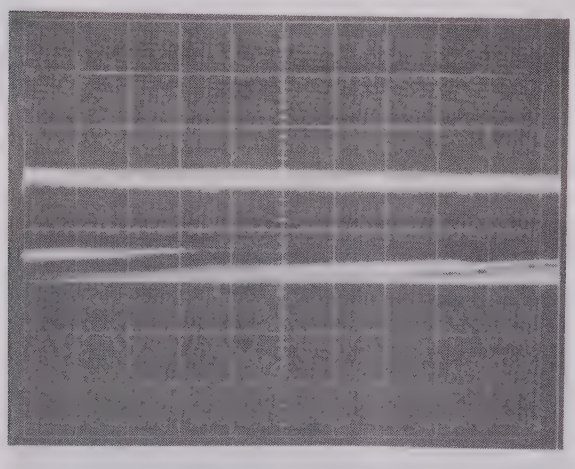

V: 2 V/div
H: 200 ns/div

Fig. 3-71 TP ❺ Waveform

If the waveform is OK, proceed to the next step. If not OK, troubleshoot the circuit near TP ❺ .

(d) Step 4

Using a voltmeter, confirm that the voltage of TP ❻ is within the +3.2 to +4 V range.

If the voltage is OK, Z5 is OK. If not OK, troubleshoot the circuit near TP ❻ .

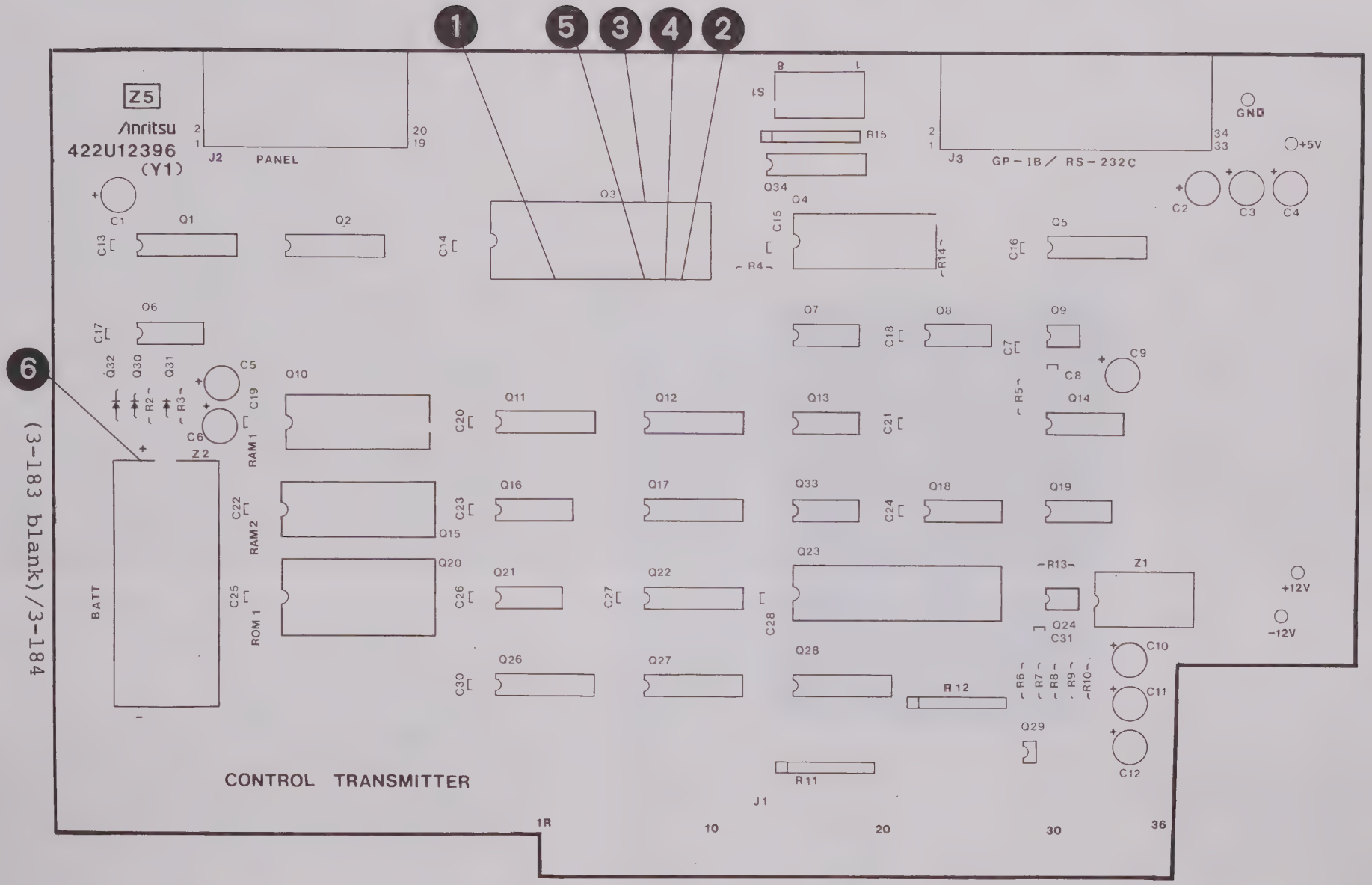

(3-183 blank)/3-184

Fig. 3-72 T-Z5 CONTROL PC Board 23 Parts Layout

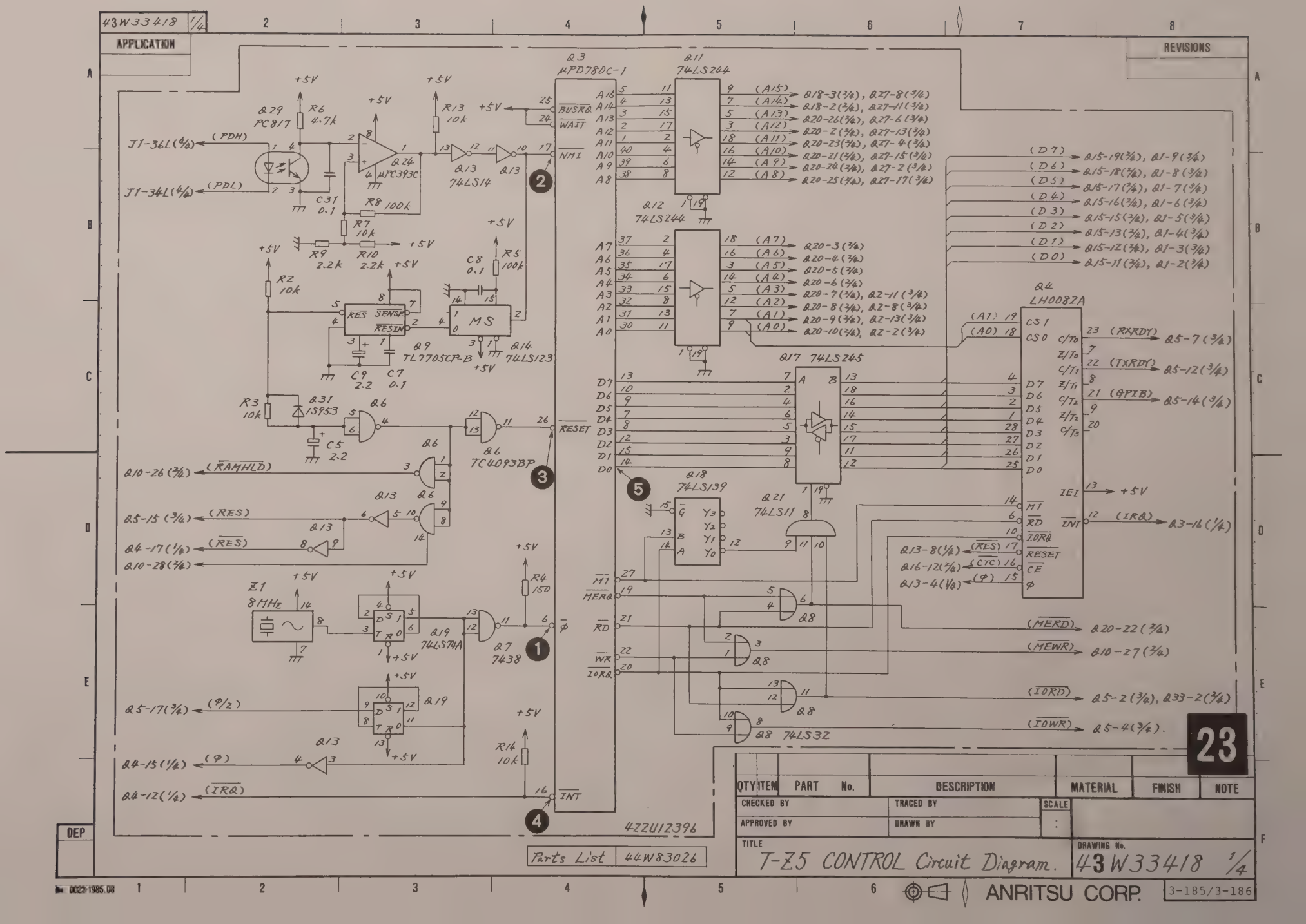
43W33418 1/4
APPLICATION
REVISIONS
Q3 μPD780C-1
Q11 74LS244
Q12 74LS244
Q4 LH0082A
Q17 74LS245
Q18 74LS139
Q21 74LS11
Q29 PC817
Q24 μPC393C
Q13 74LS14
Q9 TL7705CP-B
Q14 74LS123
Q31 1S953
Q6 TC4093BP
Q19 74LS74A
Q7 7438
Q8 74LS32
Z1 8MHz
R6 4.7k
R13 10k
R8 100k
R7 10k
R9 2.2k
R10 2.2k
R2 10k
R5 100k
C8 0.1
C31 0.1
C9 2.2
C7 0.1
C5 2.2
R3 10k
R4 150
R14 10k
(PDH)
(PDL)
(RAMHLD)
(RES)
(Φ/2)
(Φ)
(IRQ)
(RXRDY)
(TXRDY)
(GPIB)
(IRQ)
(MERD)
(MEWR)
(IORD)
(IOWR)
BUSRQ
WAIT
NMI
RESET
INT
4ZZU17396
Parts List 44W83026
DEP
QTY ITEM PART No. DESCRIPTION MATERIAL FINISH NOTE
CHECKED BY
APPROVED BY
TRACED BY
DRAWN BY
SCALE
TITLE T-Z5 CONTROL Circuit Diagram.
DRAWING No. 43W33418 1/4
23
ANRITSU CORP.
3-185/3-186

APPLICATION

REVISIONS

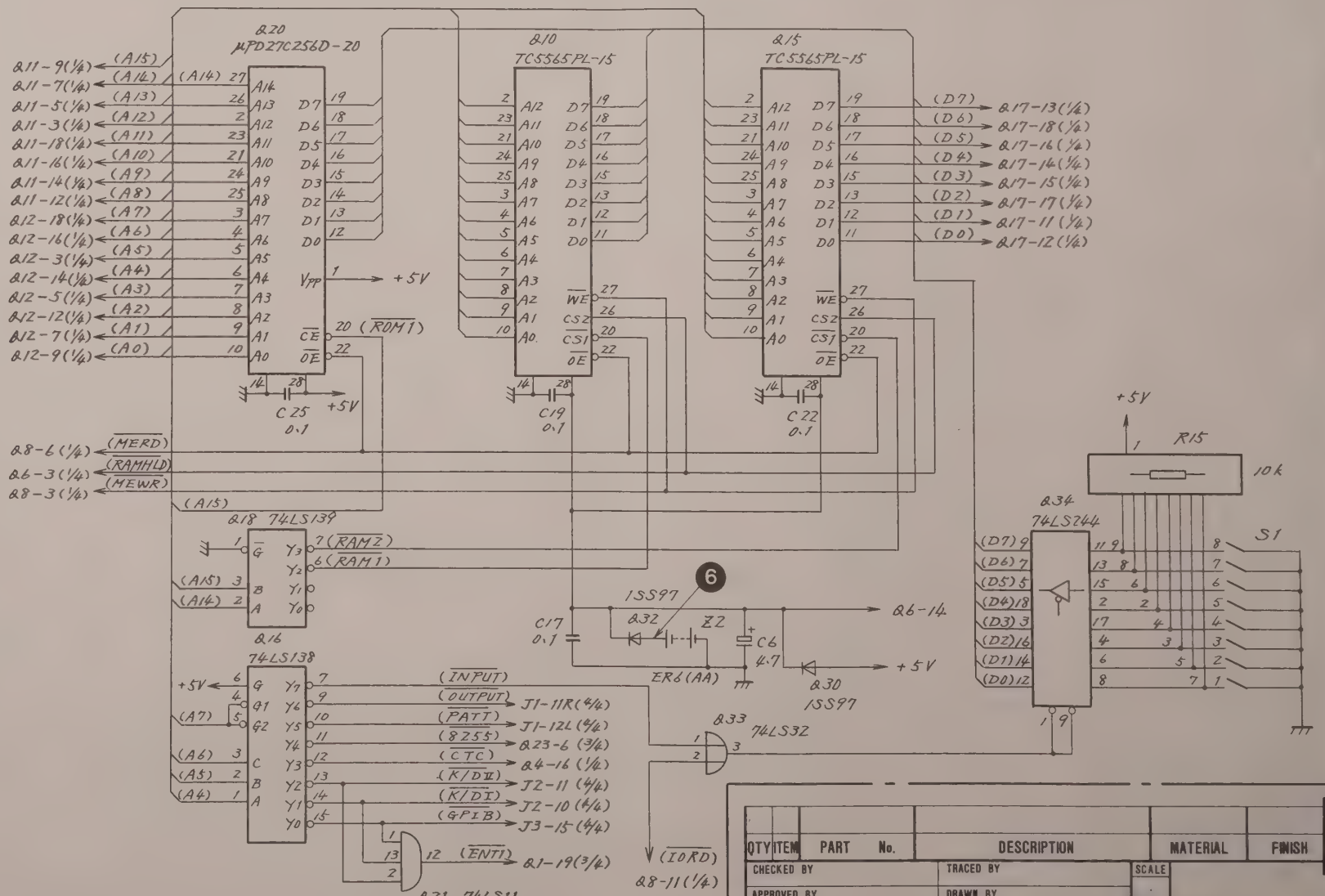

QTY	ITEM	PART No.	DESCRIPTION	MATERIAL	FINISH

CHECKED BY | TRACED BY | SCALE

APPROVED BY | DRAWN BY

TITLE: T-Z5 CONTROL Circuit Diagram.

DRAWING No. 43W33418 2/4

23

DEP

APPLICATION

REVISIONS

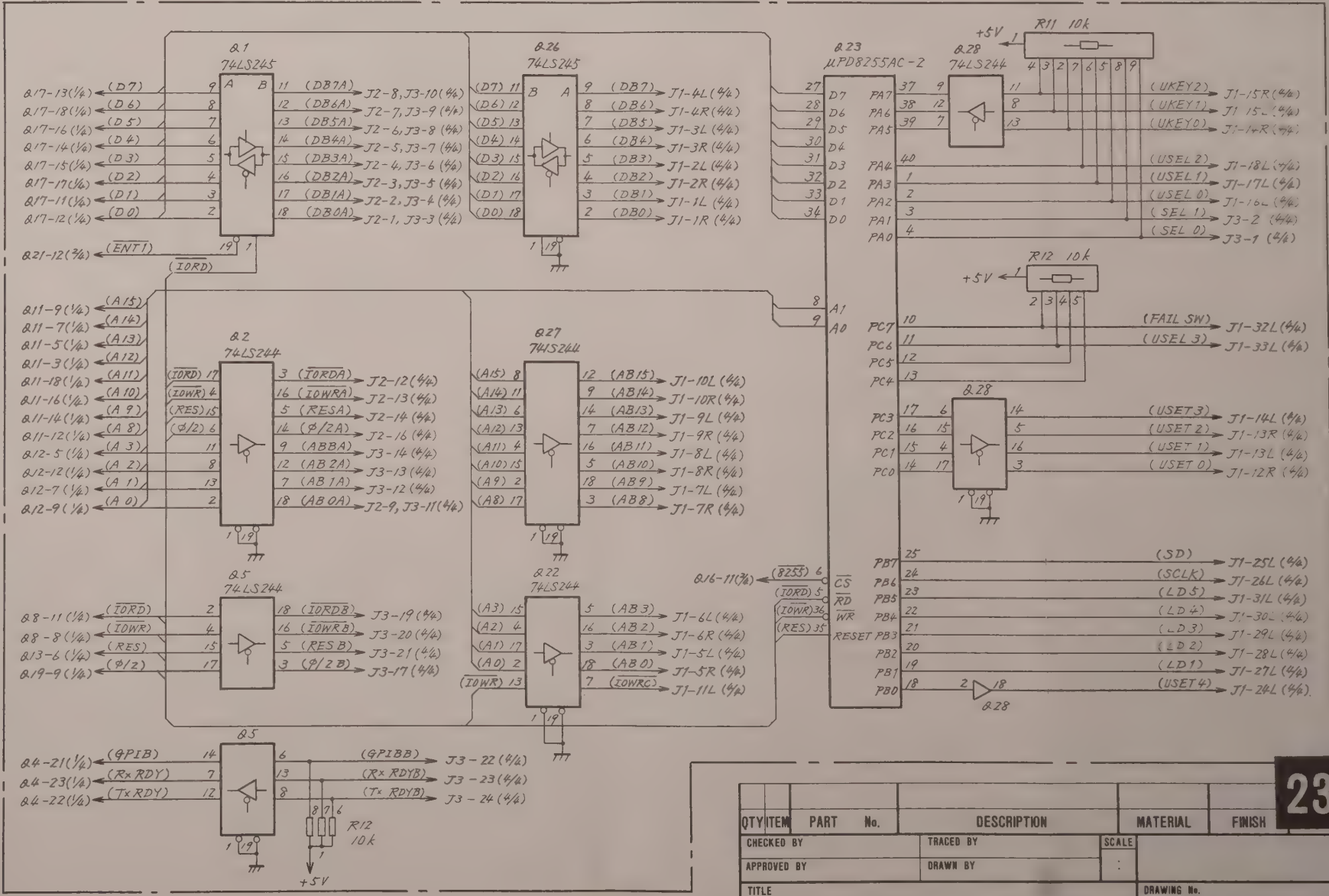

QTY	ITEM	PART No.	DESCRIPTION	MATERIAL	FINISH

CHECKED BY | TRACED BY | SCALE

APPROVED BY | DRAWN BY | :

TITLE: T-Z5 CONTROL Circuit Diagram.

DRAWING No. 43W33418 3/4

23

DEP

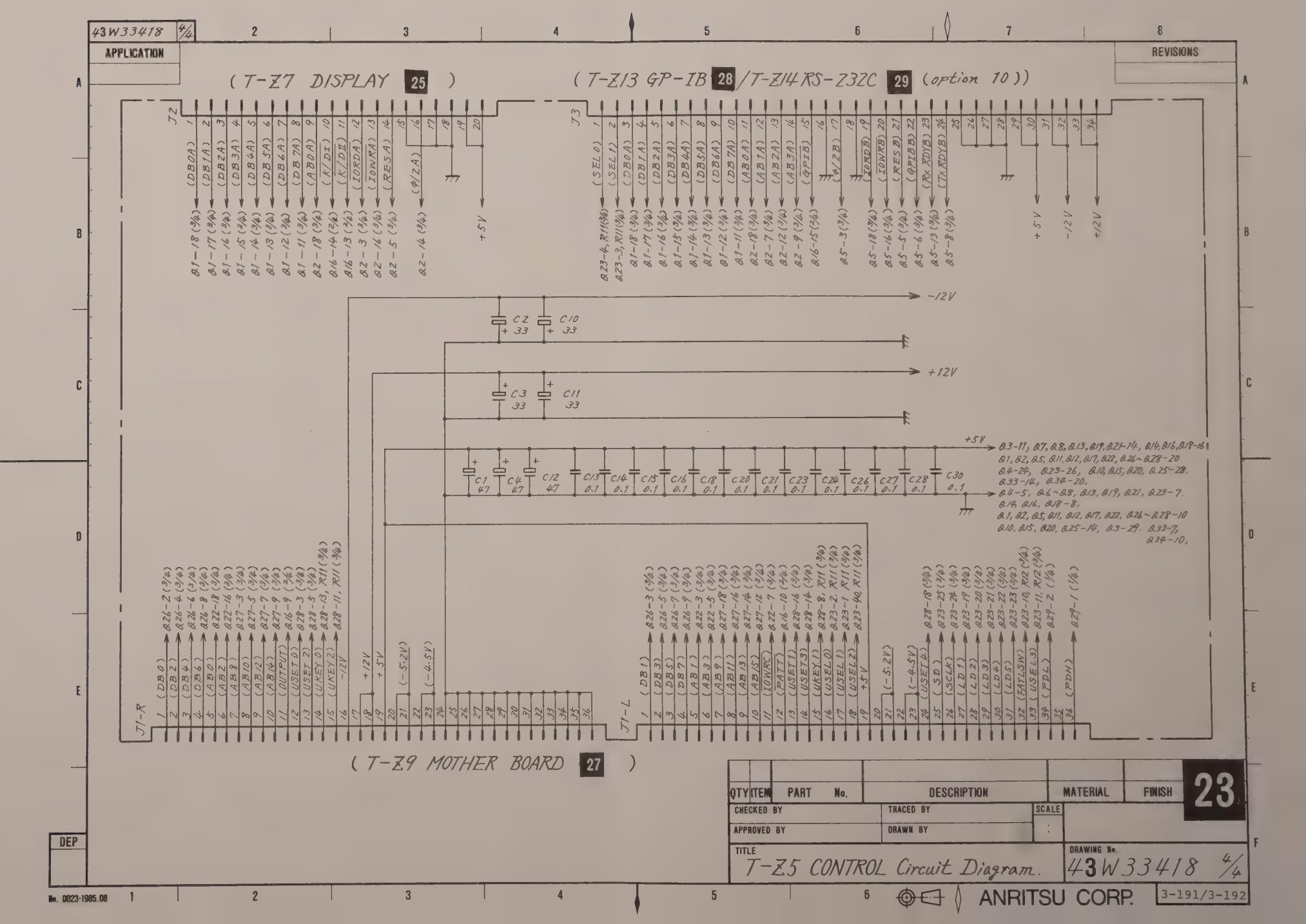
43W33418 4/4
APPLICATION
REVISIONS
(T-Z7 DISPLAY 25)
(T-Z13 GP-IB 28 / T-Z14 RS-232C 29 (option 10))
J2
J3
+5V
-12V
+12V
C2 33
C10 33
C3 33
C11 33
C1 47
C4 47
C12 47
C13 0.1
C14 0.1
C15 0.1
C16 0.1
C18 0.1
C20 0.1
C21 0.1
C23 0.1
C24 0.1
C26 0.1
C27 0.1
C28 0.1
C30 0.1
J1-R
J1-L
(T-Z9 MOTHER BOARD 27)
DEP
QTY ITEM PART No. DESCRIPTION MATERIAL FINISH
23
CHECKED BY
TRACED BY
SCALE
APPROVED BY
DRAWN BY
TITLE
T-Z5 CONTROL Circuit Diagram.
DRAWING No.
43W33418 4/4
No. 0023-1985.08
ANRITSU CORP.
3-191/3-192

3.5.8 T-Z7 DISPLAY 25, T-Z8 50 Ω/75 Ω TRANSDUCER 26, T-Z9 MOTHERBOARD 27, T-Z13 GP-IB 28, T-Z14 RS-232C 29, and EXTENDER BOARD PC boards

(1) Circuit description

(a) 50Ω/75Ω TRANSDUCER (T-Z8)

This circuit receives the four signals for DATA1 output, DATA2 output, CLOCK1 output, and CLOCK2 output from OUTPUT (T-Z4) and the signal for DATA3 output from PATTERN GENERATOR-II (T-Z3). Its output voltage is the same whether the load impedance is 50 Ω or 75 Ω. The above five signals passed through this circuit are sent to the DATA1, DATA2, CLOCK1, CLOCK2, and DATA3 output connectors, respectively.

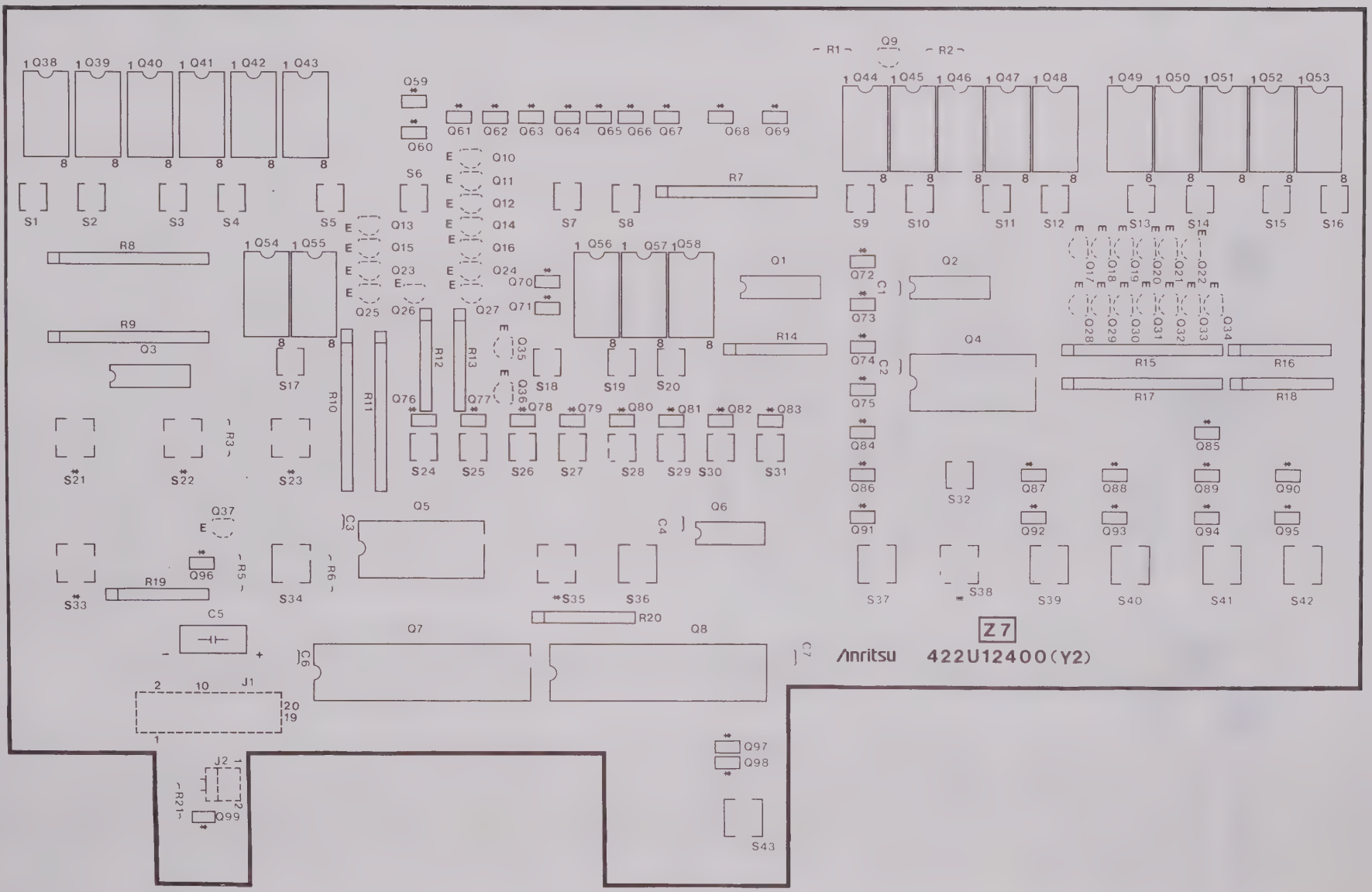

Fig. 3-73 T-Z7 DISPLAY PC Board 25 Parts Layout

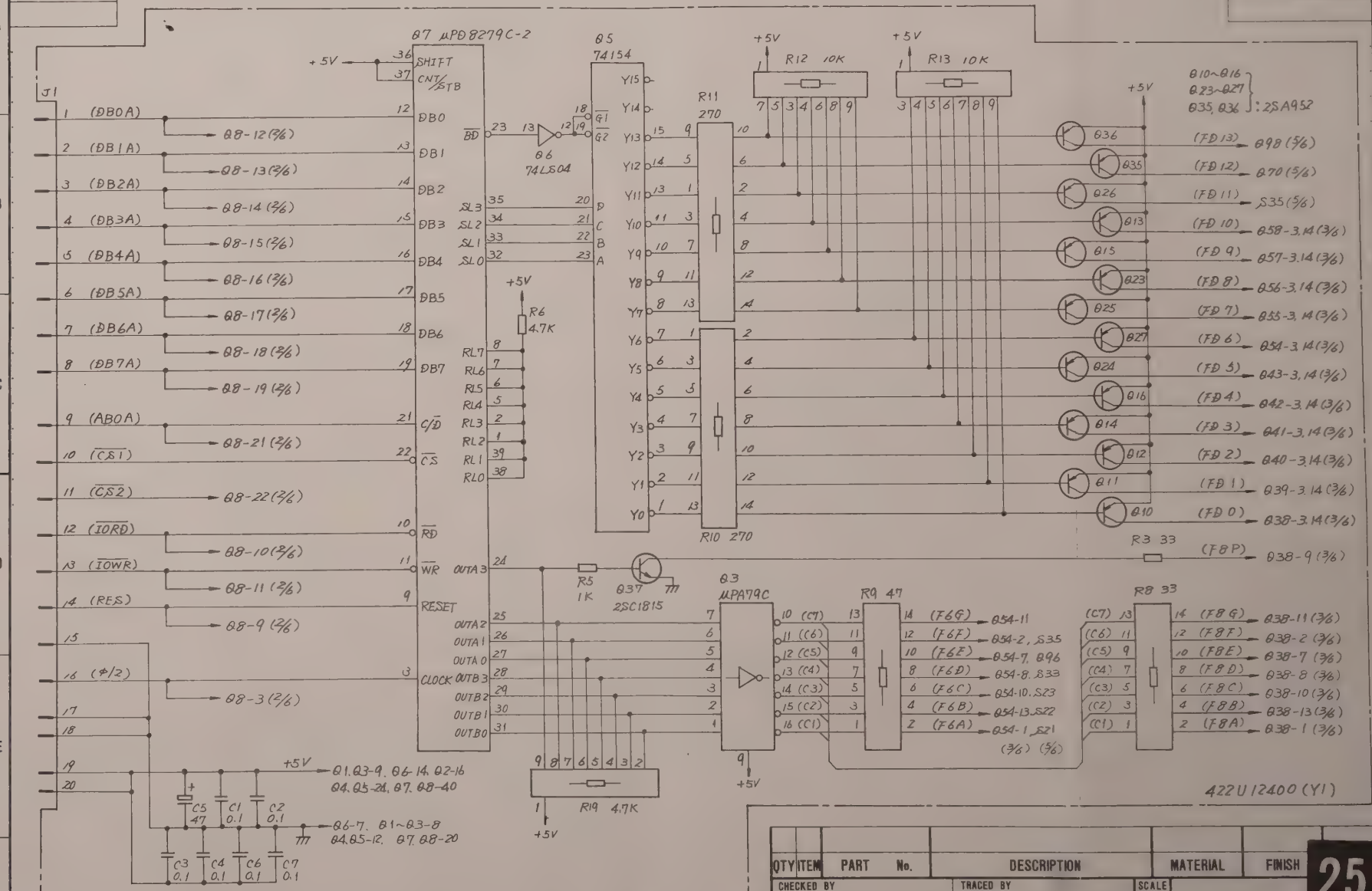
43W33420 1/6
APPLICATION
REVISIONS
Q7 μPD8279C-2
Q5 74154
Q6 74LS04
Q3 μPA79C
Q37 2SC1815
R11 270
R10 270
R12 10K
R13 10K
R6 4.7K
R5 1K
R9 47
R8 33
R3 33
R19 4.7K
Q10~Q16 Q23~Q27 Q35, Q36 : 2SA952
(DB0A)
(DB1A)
(DB2A)
(DB3A)
(DB4A)
(DB5A)
(DB6A)
(DB7A)
(ABOA)
(CS1)
(CS2)
(IORD)
(IOWR)
(RES)
(φ/2)
(FD 13) Q36
(FD 12) Q35
(FD 11) Q26
(FD 10) Q13
(FD 9) Q15
(FD 8) Q23
(FD 7) Q25
(FD 6) Q27
(FD 5) Q24
(FD 4) Q16
(FD 3) Q14
(FD 2) Q12
(FD 1) Q11
(FD 0) Q10
(F8P) Q38-9 (3/6)
C5 47
C1 0.1
C2 0.1
C3 0.1
C4 0.1
C6 0.1
C7 0.1
Parts List 44W83028
422U12400 (Y1)
QTY ITEM PART No. DESCRIPTION MATERIAL FINISH
CHECKED BY
APPROVED BY
TRACED BY
DRAWN BY
SCALE
TITLE
T-Z7 DISPLAY Circuit Diagram
DRAWING No.
43W33420 1/6
25
DEP
No. 0023-1985.08
ANRITSU CORP.
3-195/3-196

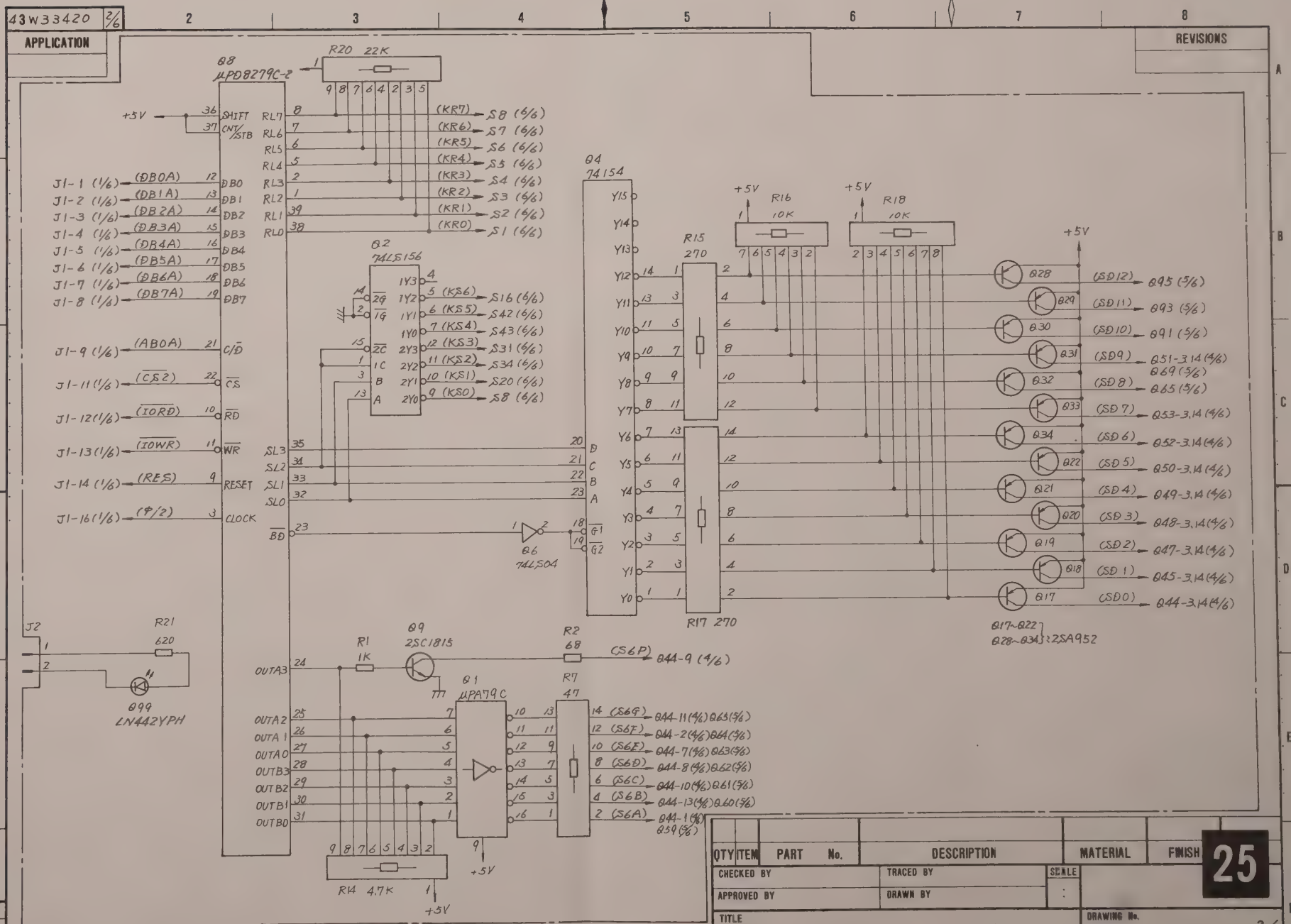
43W33420 2/6
APPLICATION
REVISIONS
U8 μPD8279C-2
R20 22K
+5V
SHIFT
CNT/STB
RL7
RL6
RL5
RL4
RL3
RL2
RL1
RL0
(KR7) S8 (6/6)
(KR6) S7 (6/6)
(KR5) S6 (6/6)
(KR4) S5 (6/6)
(KR3) S4 (6/6)
(KR2) S3 (6/6)
(KR1) S2 (6/6)
(KR0) S1 (6/6)
J1-1 (1/6) (DB0A) DB0
J1-2 (1/6) (DB1A) DB1
J1-3 (1/6) (DB2A) DB2
J1-4 (1/6) (DB3A) DB3
J1-5 (1/6) (DB4A) DB4
J1-6 (1/6) (DB5A) DB5
J1-7 (1/6) (DB6A) DB6
J1-8 (1/6) (DB7A) DB7
J1-9 (1/6) (ABOA) C/D
J1-11 (1/6) (CS2) CS
J1-12 (1/6) (IORD) RD
J1-13 (1/6) (IOWR) WR
J1-14 (1/6) (RES) RESET
J1-16 (1/6) (φ/2) CLOCK
U2 74LS156
U4 74154
R15 270
R16 10K
R18 10K
R17 270
U6 74LS04
U9 2SC1815
U1 μPA79C
R1 1K
R2 68
R7 47
R14 4.7K
J2
R21 620
D99 LN442YPH
Q17~Q22 Q28~Q34 : 2SA952
SL3
SL2
SL1
SL0
BD
OUTA3
OUTA2
OUTA1
OUTA0
OUTB3
OUTB2
OUTB1
OUTB0
(KS6) S16 (6/6)
(KS5) S42 (6/6)
(KS4) S43 (6/6)
(KS3) S31 (6/6)
(KS2) S34 (6/6)
(KS1) S20 (6/6)
(KS0) S8 (6/6)
(CS6P) Q44-9 (4/6)
(SD12) Q95 (5/6)
(SD11) Q93 (5/6)
(SD10) Q91 (5/6)
(SD9) Q51-3,14 (4/6) Q69 (5/6)
(SD8) Q65 (5/6)
(SD7) Q53-3,14 (4/6)
(SD6) Q52-3,14 (4/6)
(SD5) Q50-3,14 (4/6)
(SD4) Q49-3,14 (4/6)
(SD3) Q48-3,14 (4/6)
(SD2) Q47-3,14 (4/6)
(SD1) Q45-3,14 (4/6)
(SD0) Q44-3,14 (4/6)
(CS6G) Q44-11 (4/6) Q63 (5/6)
(CS6F) Q44-2 (4/6) Q64 (5/6)
(CS6E) Q44-7 (4/6) Q63 (5/6)
(CS6D) Q44-8 (4/6) Q62 (5/6)
(CS6C) Q44-10 (4/6) Q61 (5/6)
(CS6B) Q44-13 (4/6) Q60 (5/6)
(CS6A) Q44-1 (4/6) Q59 (5/6)
QTY ITEM PART No. DESCRIPTION MATERIAL FINISH
CHECKED BY
APPROVED BY
TRACED BY
DRAWN BY
SCALE
TITLE
T-27 DISPLAY Circuit Diagram
DRAWING No.
43W33420 2/6
DEP
No. 0023-1985.08
ANRITSU CORP.
3-197/3-198

APPLICATION

REVISIONS

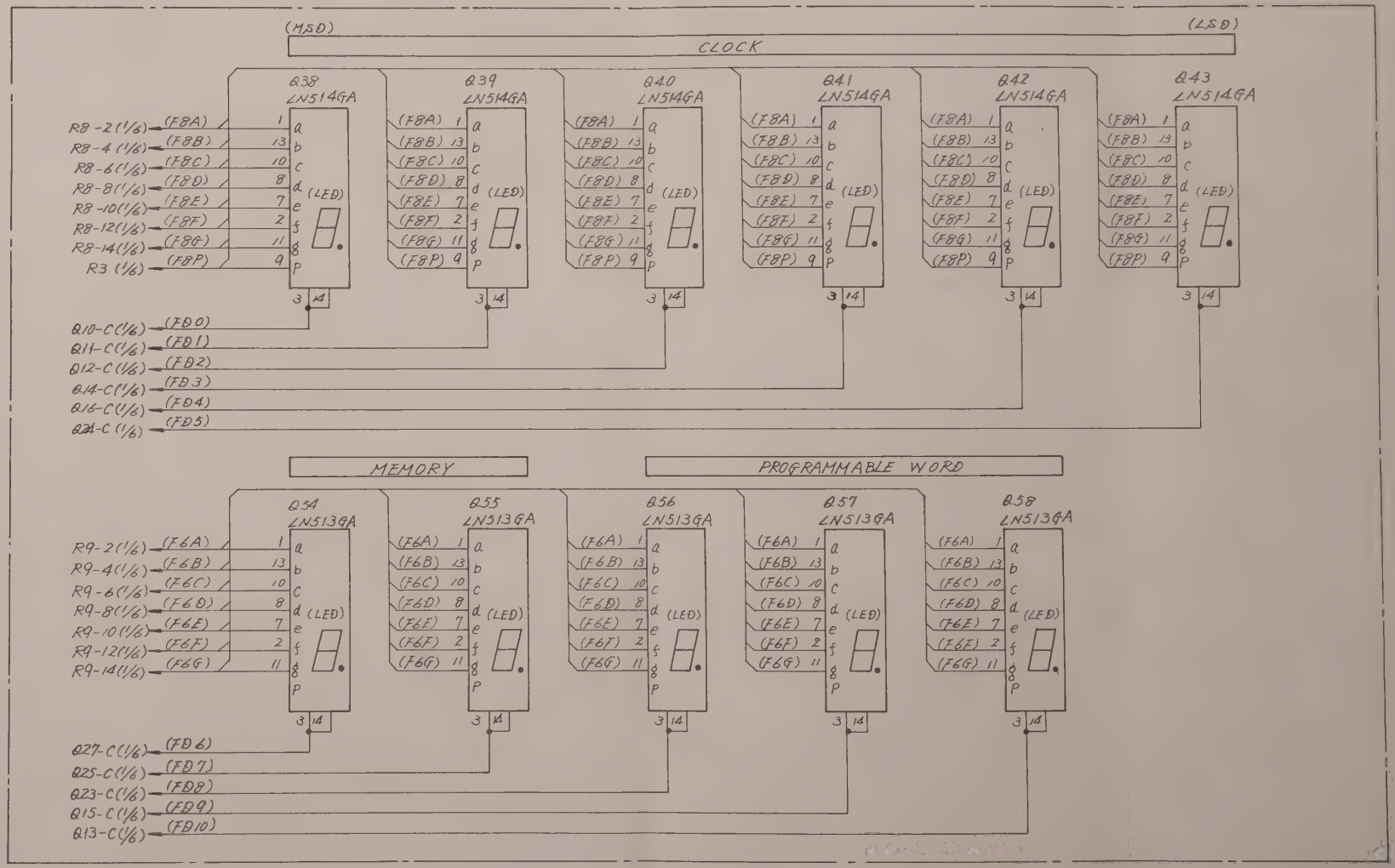

QTY	ITEM	PART No.	DESCRIPTION	MATERIAL	FINISH

CHECKED BY | TRACED BY | SCALE :

APPROVED BY | DRAWN BY

TITLE: T-Z7 DISPLAY Circuit Diagram

DRAWING No. 43W33420 3/6

25

DEP

APPLICATION

REVISIONS

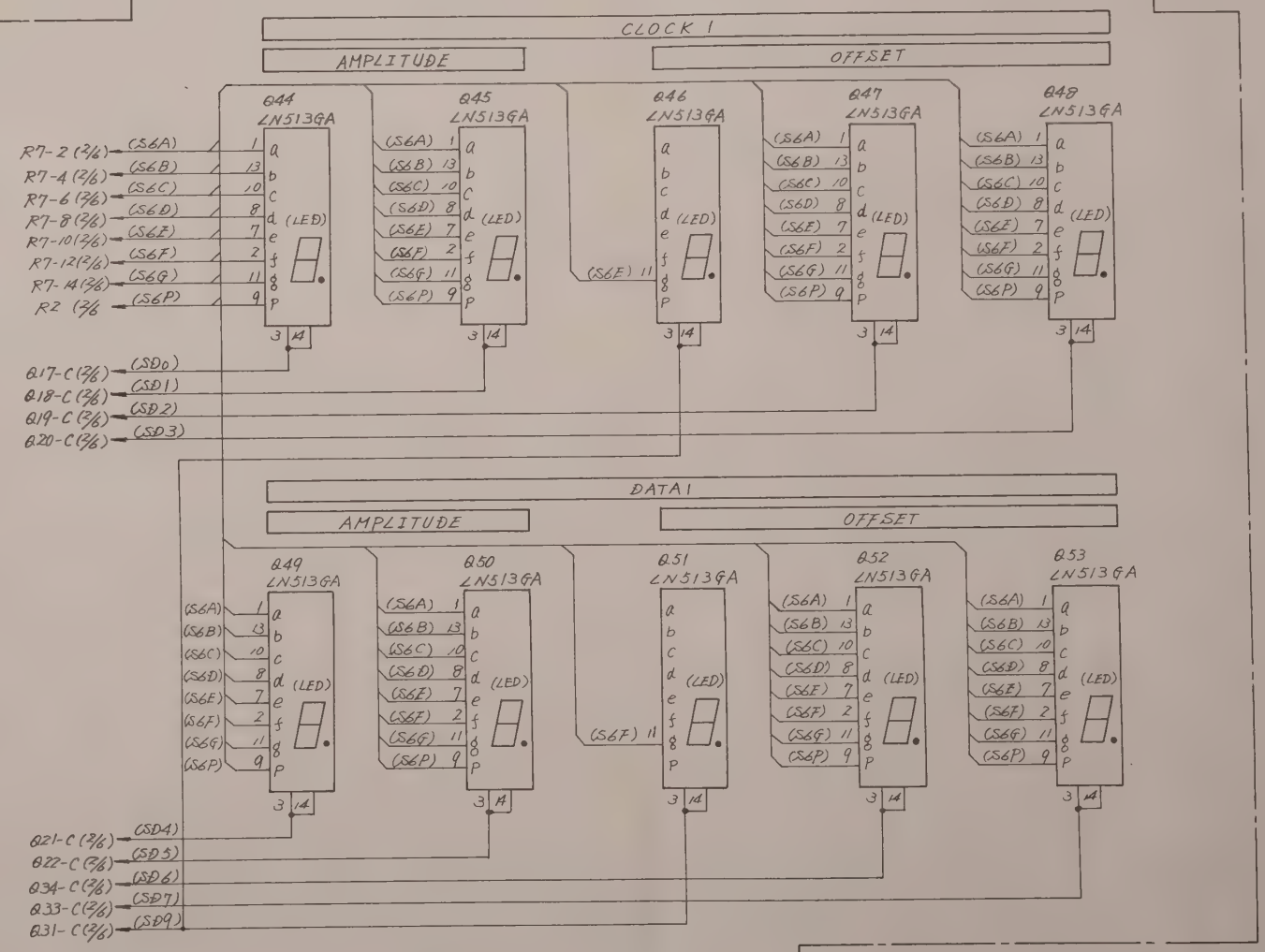

QTY	ITEM	PART No.	DESCRIPTION	MATERIAL	FINISH

CHECKED BY | TRACED BY | SCALE

APPROVED BY | DRAWN BY

TITLE: T-ET DISPLAY Circuit Diagram

DRAWING No. 43W33420 4/6

25

DEP

APPLICATION

REVISIONS

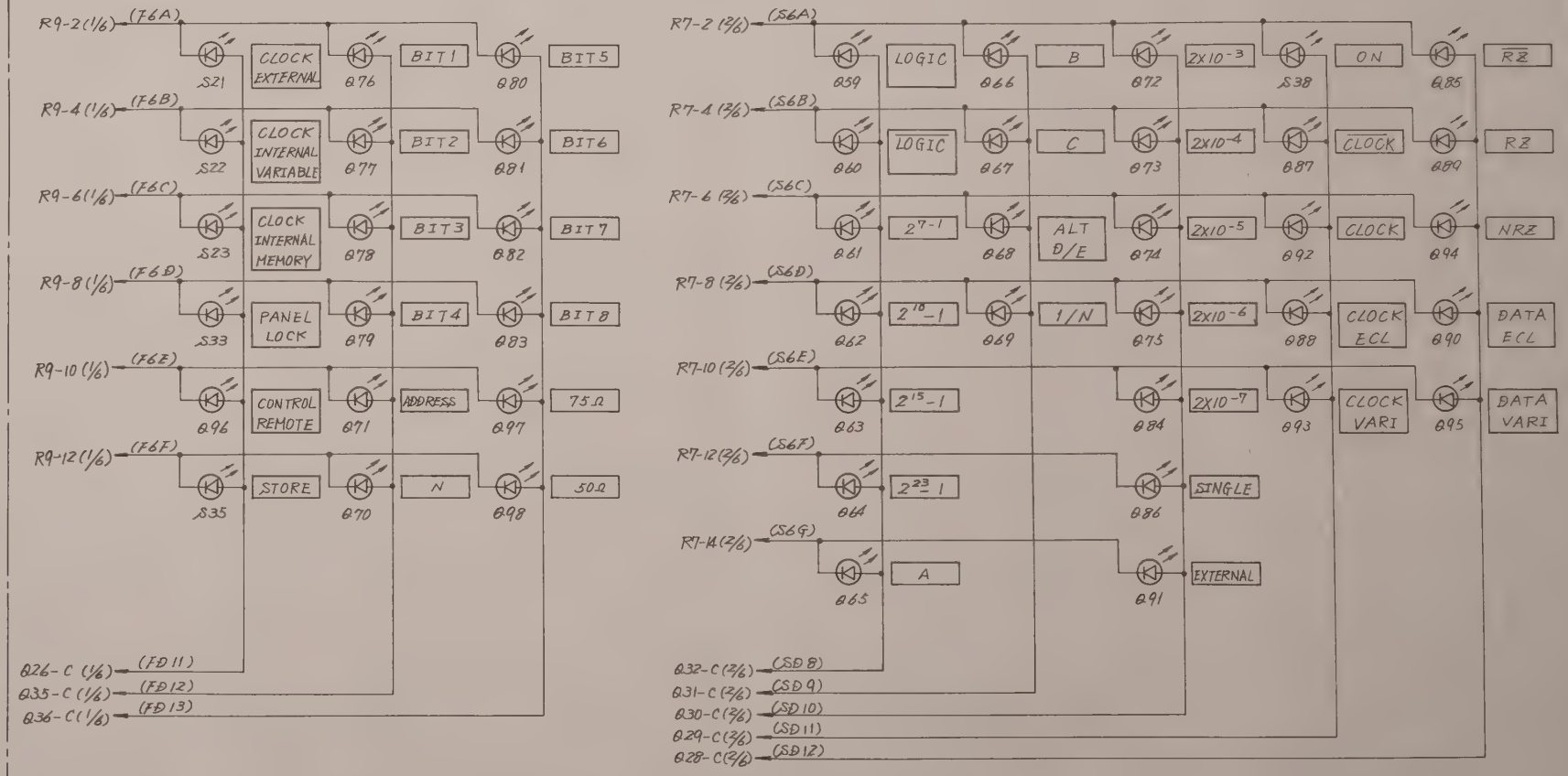

Q59~Q98 : LN342GPH

QTY	ITEM	PART No.	DESCRIPTION	MATERIAL	FINISH

CHECKED BY | TRACED BY | SCALE :

APPROVED BY | DRAWN BY

TITLE: T-Z7 DISPLAY Circuit Diagram

DRAWING No. 43W33420 5/6

25

DEP

APPLICATION

REVISIONS

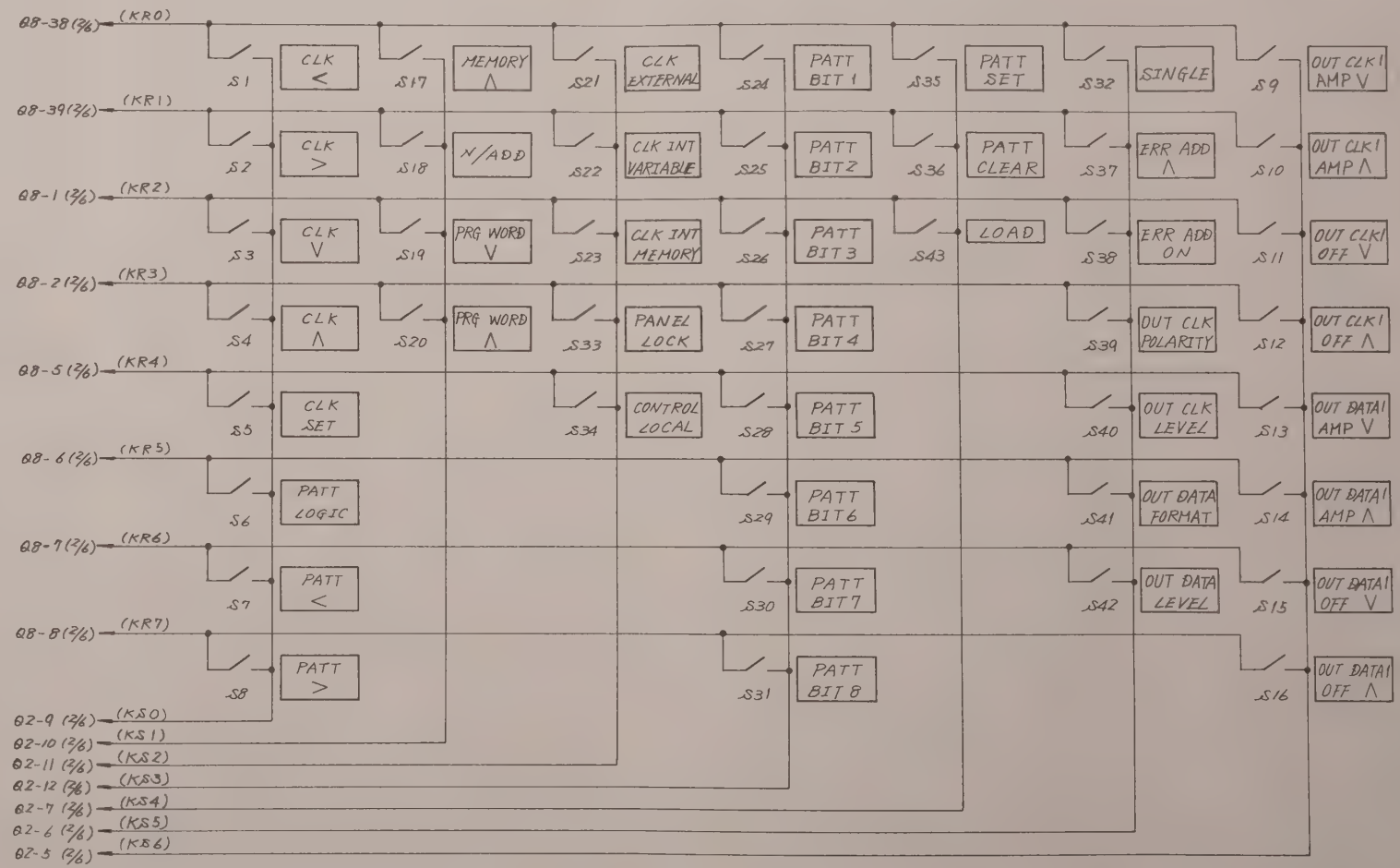

QTY	ITEM	PART No.	DESCRIPTION	MATERIAL	FINISH

CHECKED BY	TRACED BY	SCALE
APPROVED BY	DRAWN BY	:

25

DEP

TITLE: T-27 DISPLAY Circuit Diagram

DRAWING No. 43W33420 6/6

Fig. 3-74 T-Z8 50 Ω/75 Ω TRANSDUCER PC Board 26 Parts Layout

44W83030 1/1

APPLICATION	REVISIONS

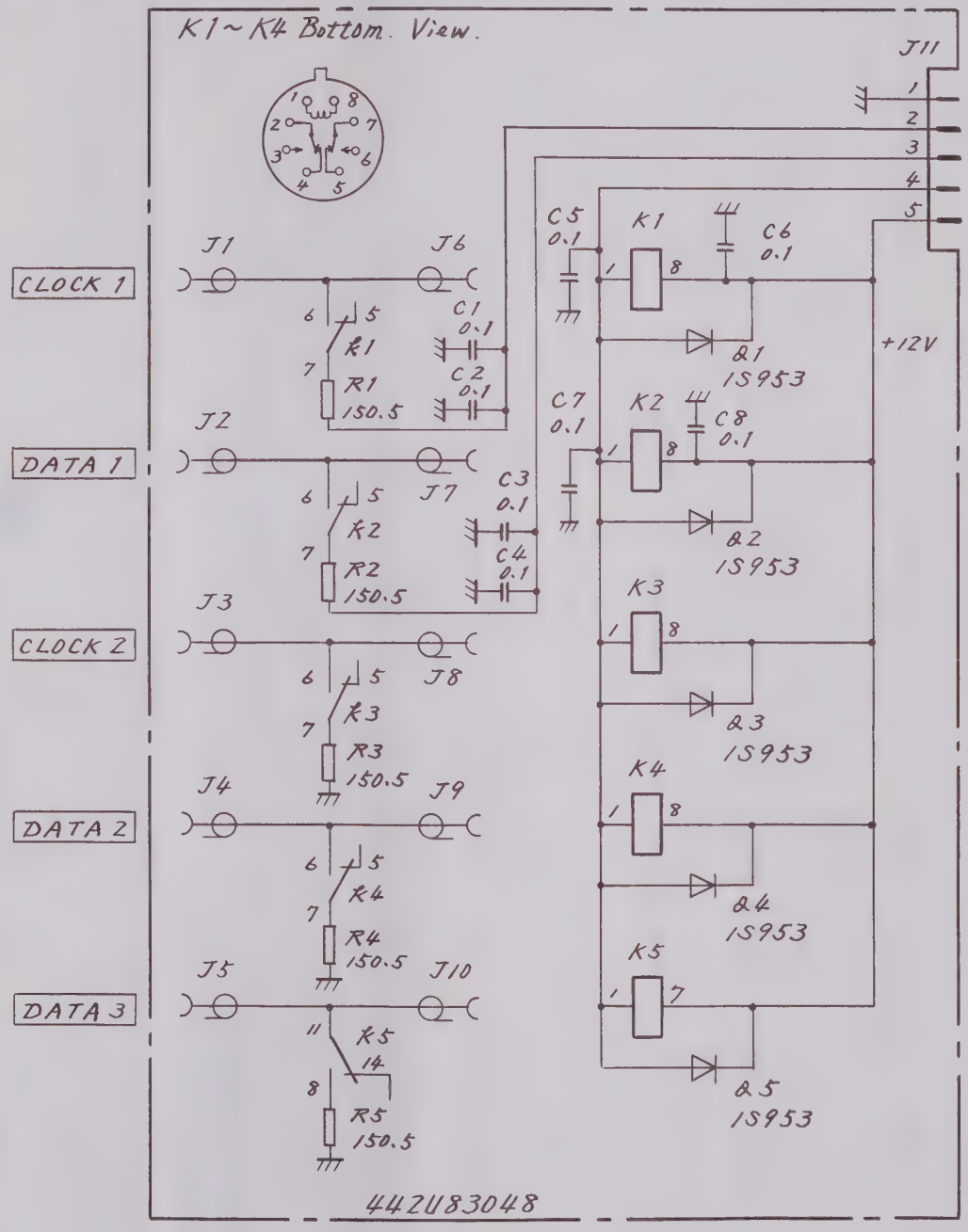

Parts List 44W83029

26

QTY	ITEM	PART No.	DESCRIPTION	MATERIAL	FINISH

CHECKED BY	TRACED BY	SCALE
APPROVED BY	DRAWN BY	:

DEP

TITLE T-Z8 50Ω/75Ω TRANSDUCER Circuit Diagram.

DRAWING No. 44W83030 1/1

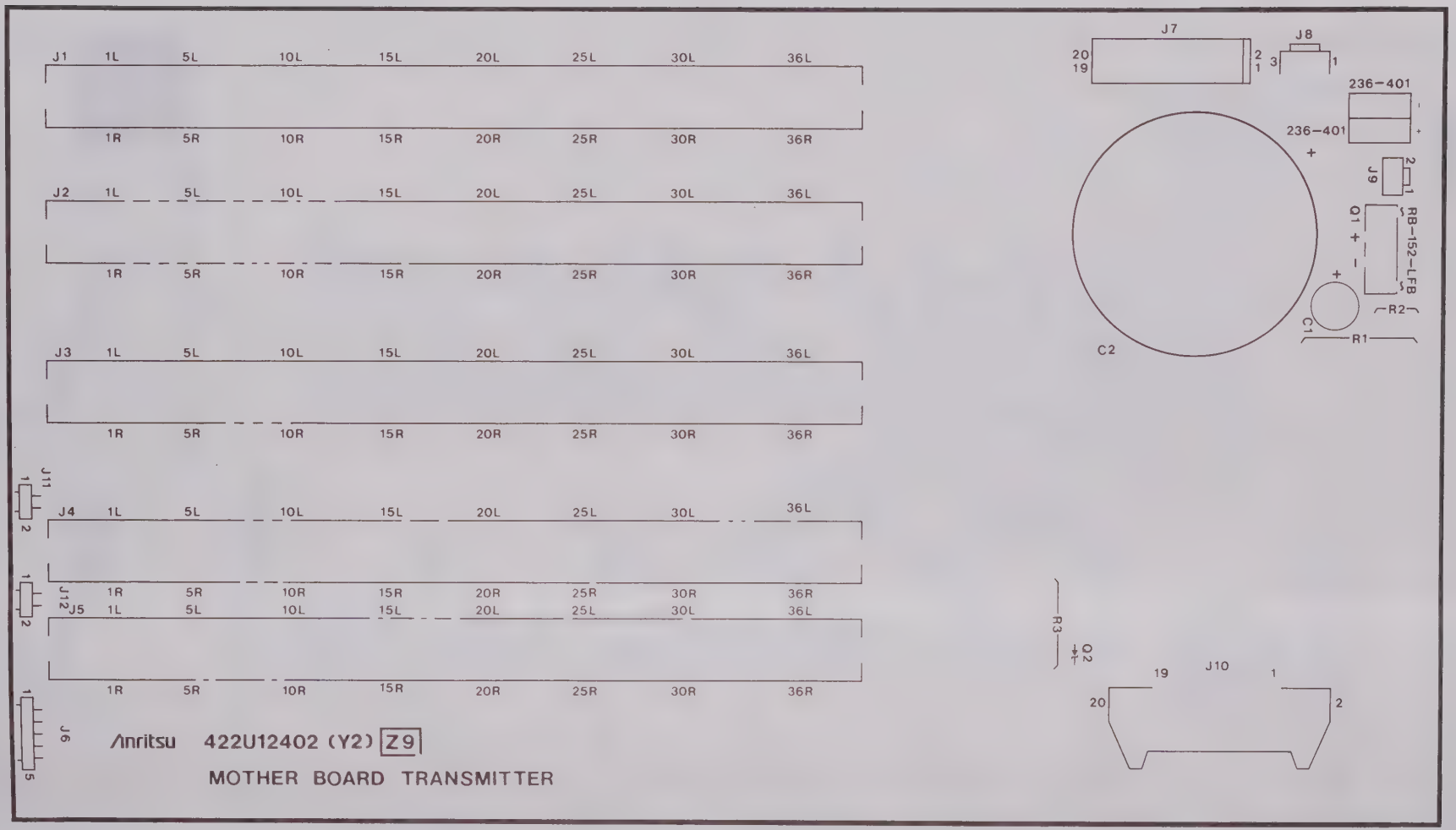

Fig. 3-75 T-Z9 MOTHERBOARD PC Board 27 Parts Layout

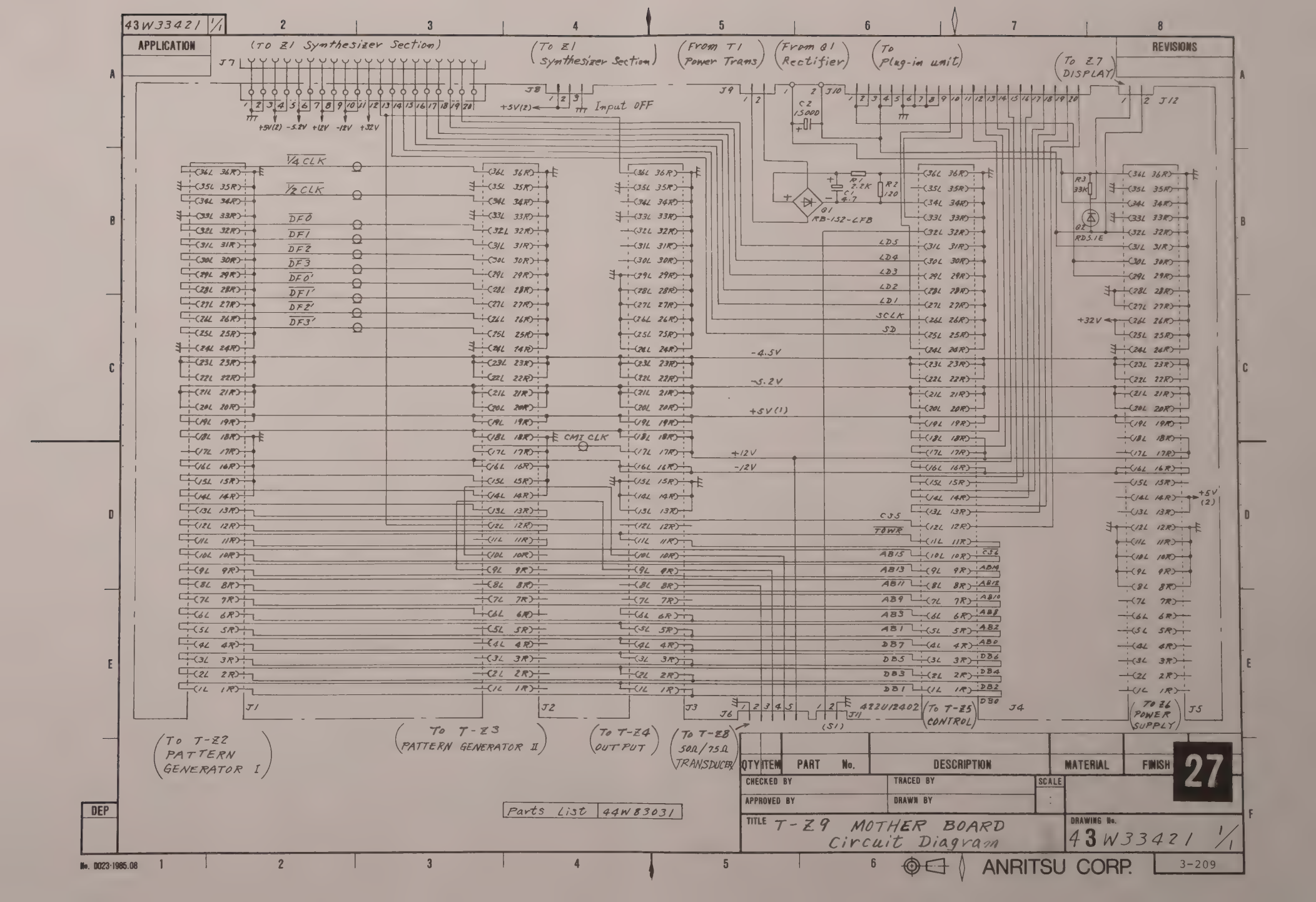
43W33421 1/1
APPLICATION
REVISIONS
(To Z1 Synthesizer Section)
(To Z1 Synthesizer Section)
(From T1 Power Trans)
(From Q1 Rectifier)
(To Plug-in unit)
(To Z7 DISPLAY)
J7
J8
J9
J10
J12
+5V(2) -5.2V +12V -12V +32V
+5V(2)
Input OFF
C2 15000
R1 2.2K
R2 120
C1 4.7
Q1 RB-152-LFB
R3 33K
Q2 RD5.1E
+32V
+5V (2)
1/4 CLK
1/2 CLK
DF0
DF1
DF2
DF3
DF0'
DF1'
DF2'
DF3'
LD5
LD4
LD3
LD2
LD1
SCLK
SD
-4.5V
-5.2V
+5V(1)
+12V
-12V
CMI CLK
CS5
TOWR
AB15
AB13
AB11
AB9
AB7
AB1
DB7
DB5
DB3
DB1
CS6
AB14
AB12
AB10
AB8
AB2
AB0
DB6
DB4
DB2
DB0
J1
J2
J3
J4
J5
J6
J11
(S1)
422U12402
(To T-Z5 CONTROL)
(To Z6 POWER SUPPLY)
(To T-Z2 PATTERN GENERATOR I)
(To T-Z3 PATTERN GENERATOR II)
(To T-Z4 OUTPUT)
(To T-Z8 50Ω/75Ω TRANSDUCER)
Parts List 44W83031
QTY ITEM PART No. DESCRIPTION MATERIAL FINISH
27
CHECKED BY
TRACED BY
SCALE
APPROVED BY
DRAWN BY
DEP
TITLE T-Z9 MOTHER BOARD Circuit Diagram
DRAWING No. 43W33421 1/1
No. 0023-1985.08
ANRITSU CORP.
3-209

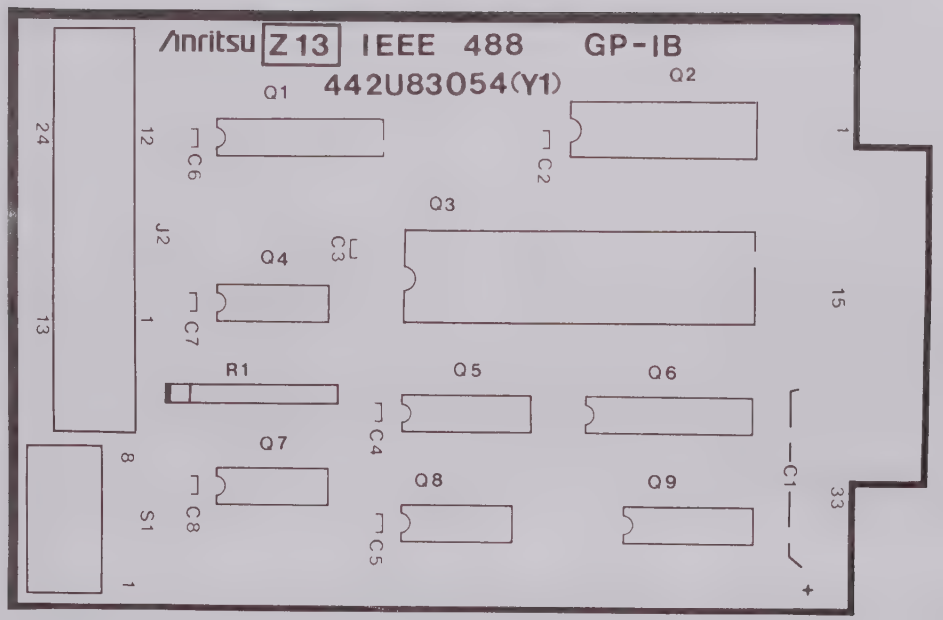

Fig. 3-76 T-Z13 and R-Z13 GP-IB PC Board 28 Parts Layout

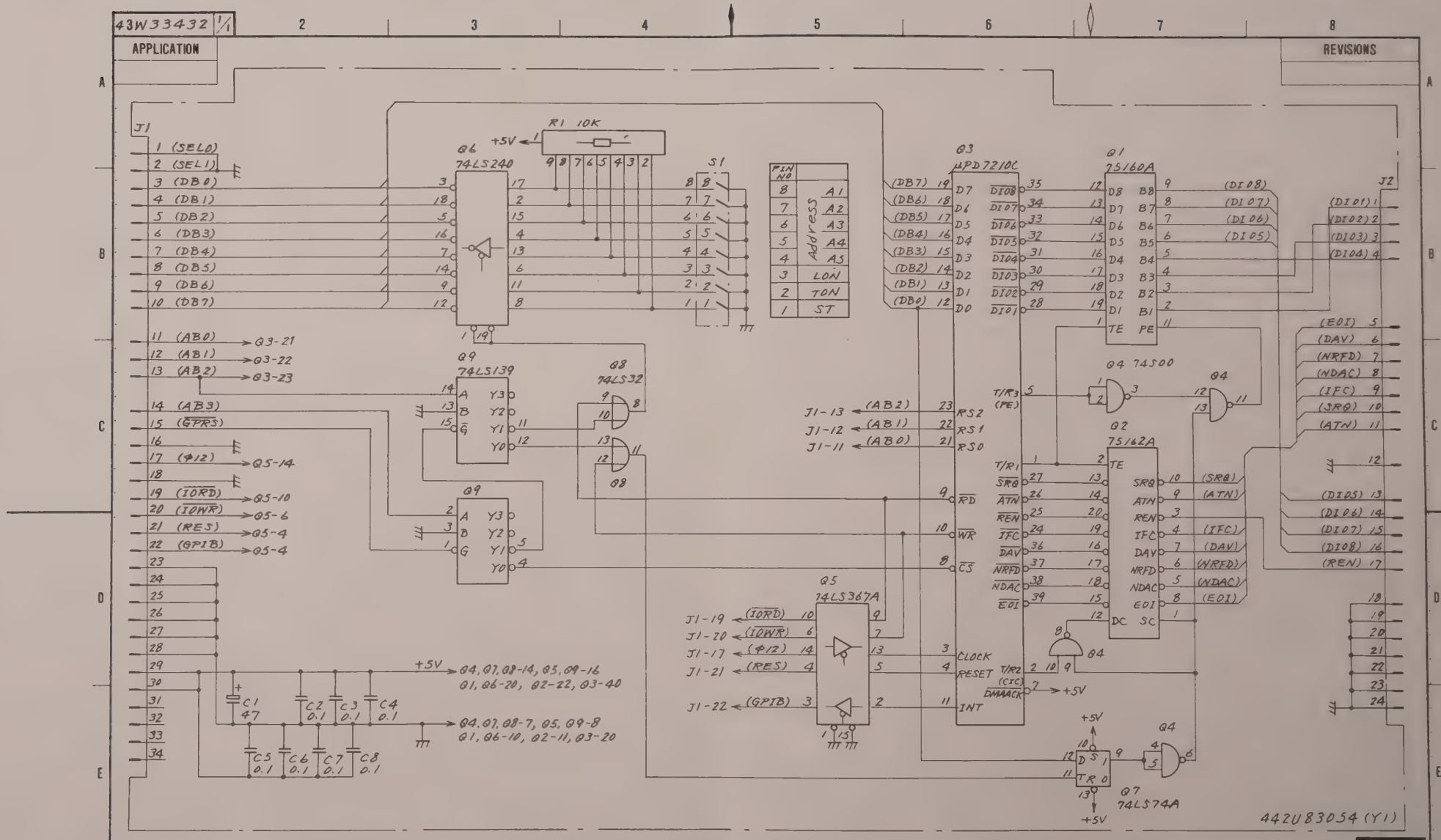

parts List	44W83046

QTY	ITEM	PART No.	DESCRIPTION	MATERIAL	FINISH

28

CHECKED BY	TRACED BY	SCALE
APPROVED BY	DRAWN BY	

TITLE T-Z13, R-Z13 GP-IB Circuit Diagram.

DRAWING No. 43W33432 1/1

DEP

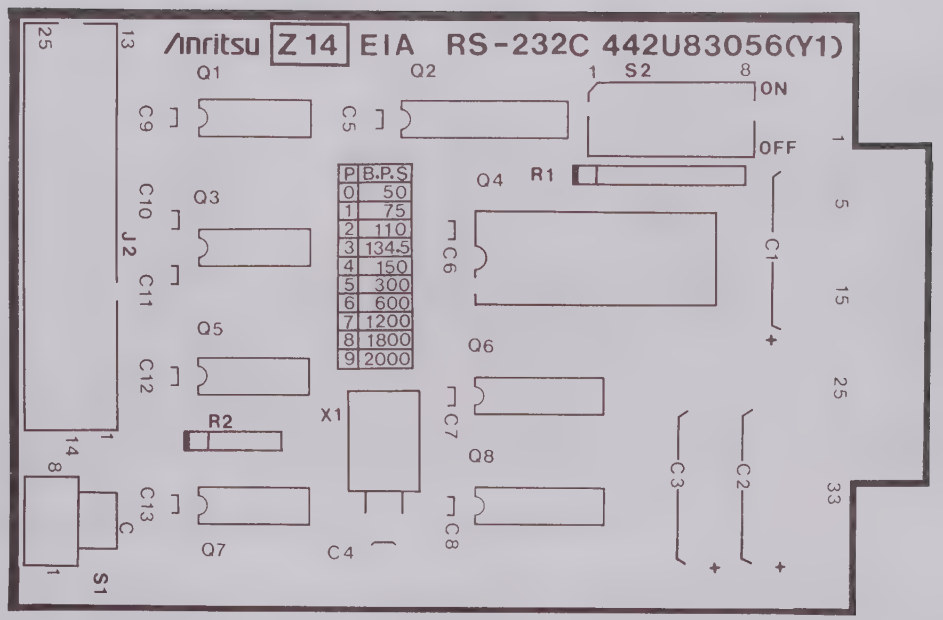

Fig. 3-77 T-Z14 and R-Z14 RS-232C PC Board 29 Parts Layout

APPLICATION

REVISIONS

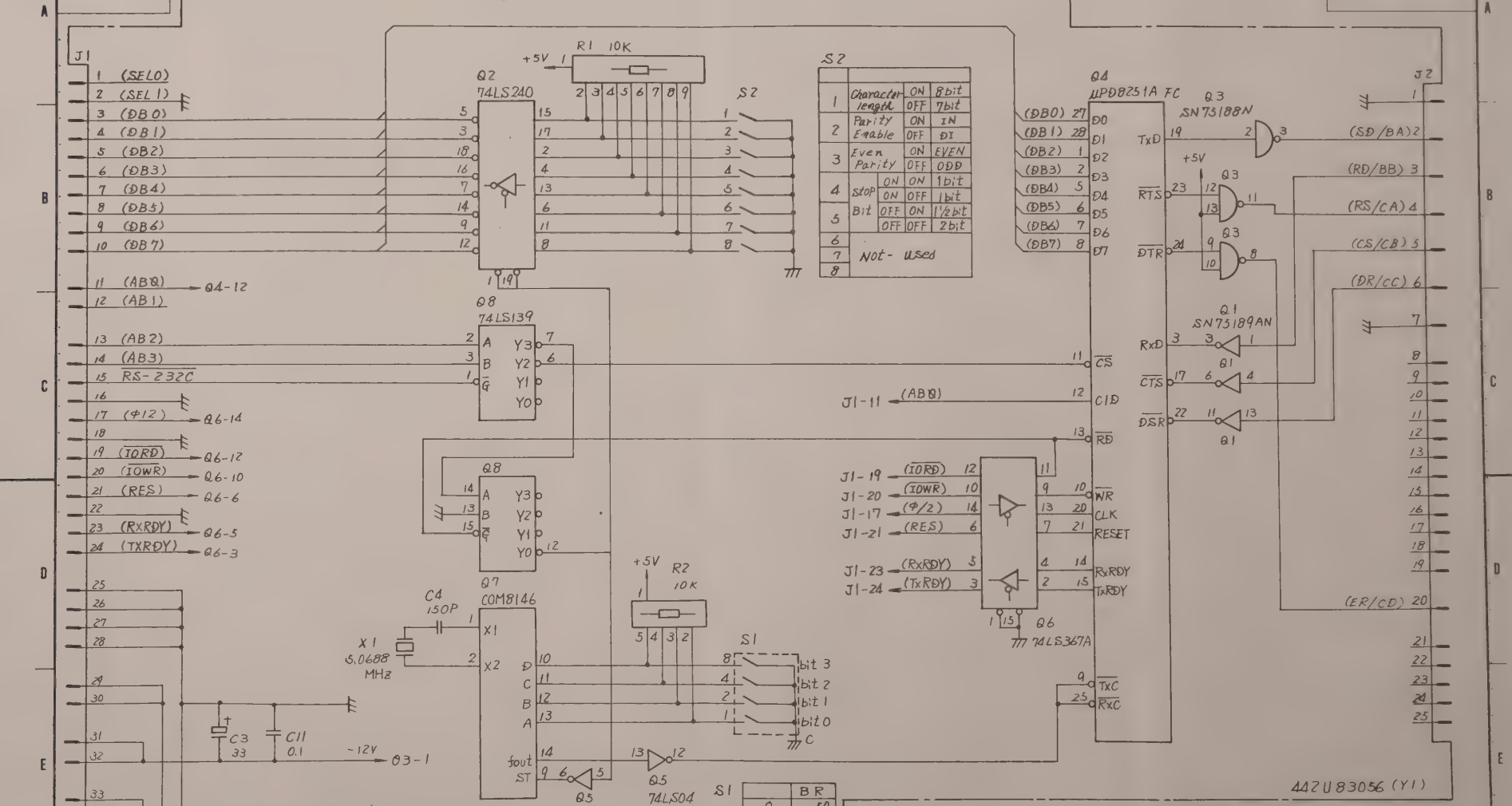

Parts List 44W83047

QTY	ITEM	PART No.	DESCRIPTION	MATERIAL	FINISH

29

CHECKED BY		TRACED BY	SCALE
APPROVED BY		DRAWN BY	

TITLE T-Z14 (Option 10), R-Z14 (Option 11)
RS232C Circuit Diagram

DRAWING No. 43W33433 1/1

DEP

3.6 Receiver Troubleshooting and Adjustment

3.6.1 Circuit description

An explanation of the ME522A Receiver circuit is given below using a simplified block diagram of the receiver.

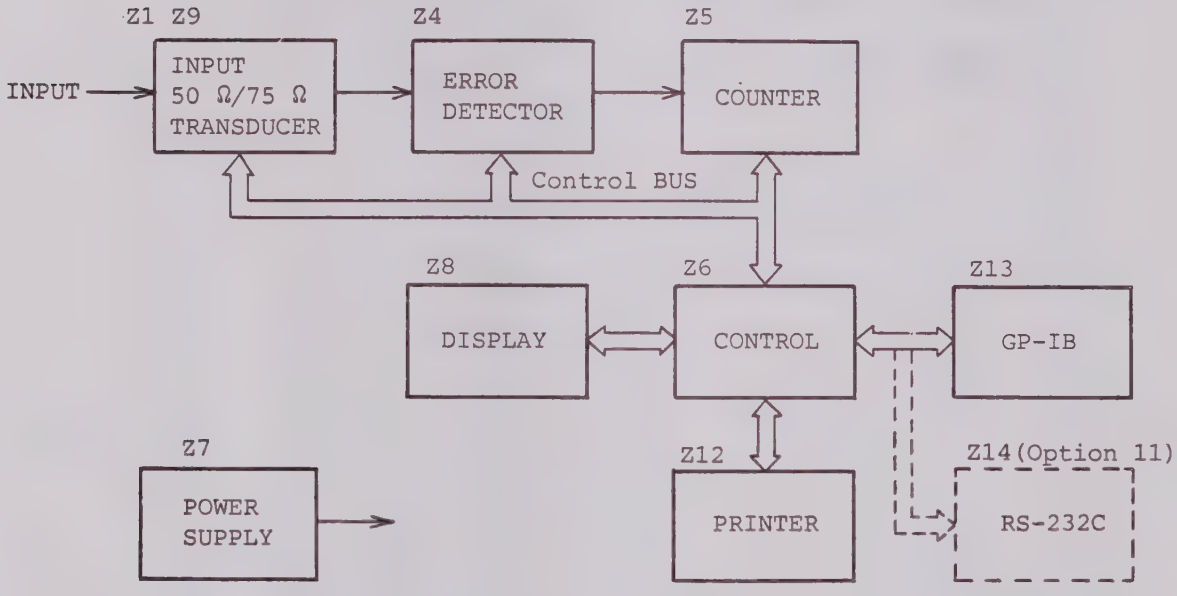

Fig. 3-78 Receiver Simplified Block Diagram

The functions of the main PC boards in the receiver are briefly described below.

For details, see paragraphs 3.6.2 to 3.6.5.

The receiver consists of the 50 Ω/75 Ω TRANSDUCER (R-Z9), INPUT (R-Z1), ERROR DETECTOR (R-Z4), COUNTER (R-Z5), CONTROL (R-Z6), DISPLAY (R-Z8), PRINTER (R-Z12), GP-IB (R-Z13), and POWER SUPPLY (R-Z7) sections. When RS-232C (R-Z14) option 11 is installed, it replaces the GP-IB (R-Z13).

The input circuits are composed of DATA INPUT, RZ/$\overline{\text{RZ}}$ HIGH FREQ COMPENSATOR, CMI/NRZ CODE CONVERTER, CMI CLOCK RESTORER, CLOCK INPUT, POLARITY SELECTOR, PHASE ADJUSTER, and SIGNAL LOSS DETECTOR.

The ERROR DETECTOR (R-Z4) consists of a reference data generator, bit error detector, synchronization judger, and AIS detector circuits.

APPLICATION

REVISIONS

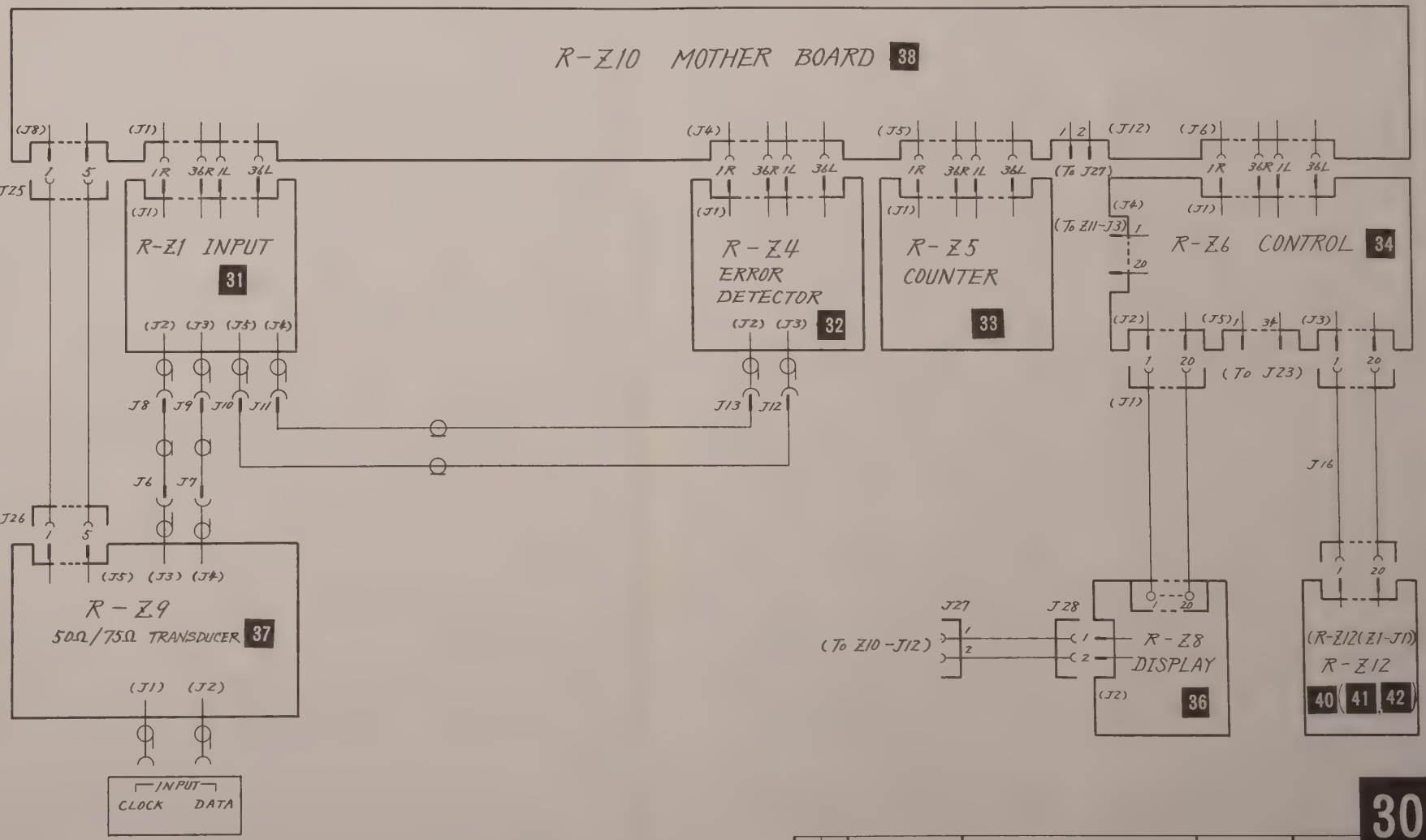

30

QTY	ITEM	PART No.	DESCRIPTION	MATERIAL	FINISH	NOTE

CHECKED BY	TRACED BY	SCALE	
APPROVED BY	DRAWN BY	:	

TITLE: ME522A Receiver Circuit Diagram.

DRAWING No.: 43W33422 1/2

Parts List 44W83032

DEP

No. 0023-1985.08

ANRITSU CORP.

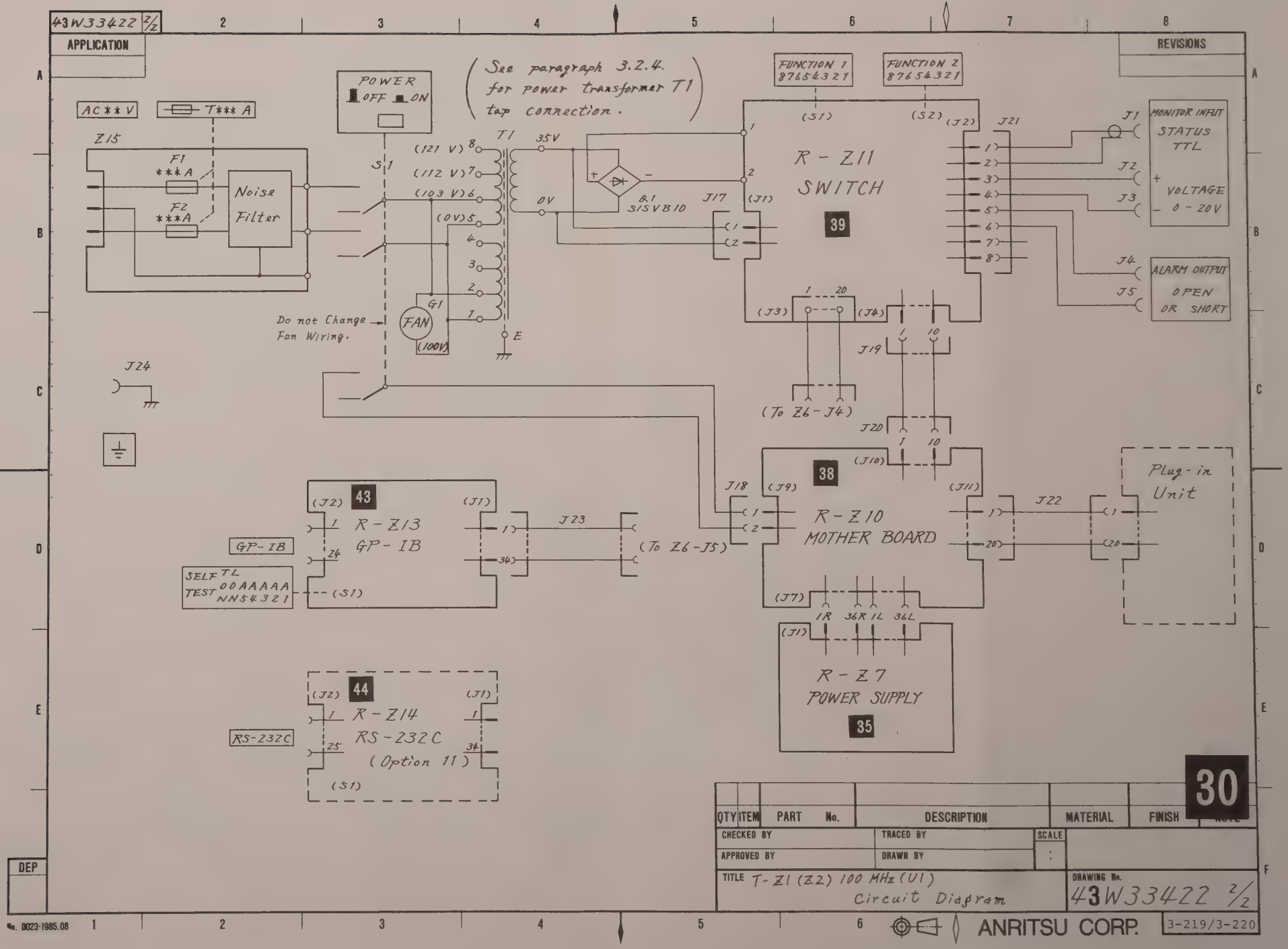
43W33422 2/2
APPLICATION
REVISIONS
AC** V
T*** A
Z15
F1 ***A
F2 ***A
Noise Filter
POWER OFF ON
S1
(121 V) 8
(112 V) 7
(103 V) 6
(0V) 5
4
3
2
1
G1
FAN
(100V)
E
T1
35V
0V
Q1 S1SVB10
(See paragraph 3.2.4. for power transformer T1 tap connection.)
Do not Change Fan Wiring.
FUNCTION 1 87654321
FUNCTION 2 87654321
(S1)
(S2)
(J2)
J21
R - Z11 SWITCH
39
(J1)
J17
(J3)
(J4)
J19
(To Z6 - J4)
J20
(J10)
J1
J2
J3
J4
J5
MONITOR INPUT
STATUS TTL
VOLTAGE 0 - 20V
ALARM OUTPUT
OPEN OR SHORT
J24
38
J18
(J9)
(J11)
R - Z10 MOTHER BOARD
J22
Plug-in Unit
(J7)
1R 36R 1L 36L
(J1)
R - Z7 POWER SUPPLY
35
43
(J2)
(J1)
R - Z13 GP - IB
GP-IB
SELF TEST
TL 00AAAAA NN54321
(S1)
J23
(To Z6 - J5)
44
(J2)
(J1)
R - Z14 RS - 232C (Option 11)
RS-232C
(S1)
30
QTY ITEM PART No. DESCRIPTION MATERIAL FINISH
CHECKED BY
TRACED BY
SCALE
APPROVED BY
DRAWN BY
TITLE T-Z1 (Z2) 100 MHz (U1) Circuit Diagram
DRAWING No. 43W33422 2/2
DEP
No. 0023-1985.08
ANRITSU CORP.
3-219/3-220

3.6.2 R-Z7 POWER SUPPLY PC board 35

(1) Troubleshooting

After lifting the R-Z7 PC board using the extender board, perform troubleshooting. (See Fig. 3-79.)

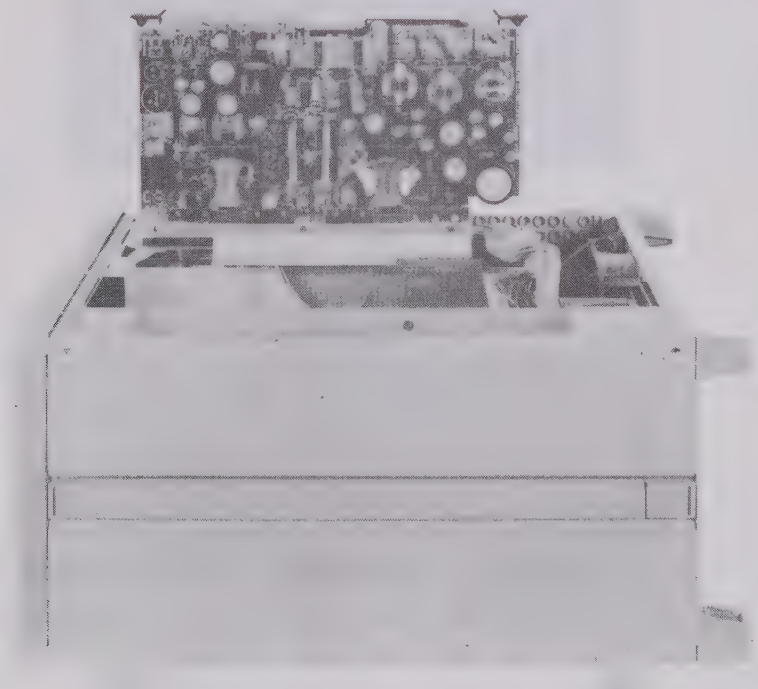

Fig. 3-79 R-Z7 PC Board Troubleshooting Configuration

(a) Step 1

Using an oscilloscope, confirm that the waveform at TP ❶ is as shown in Fig. 3-80. At this time, connect the oscilloscope probe ground terminal to the FG (Floating Ground). This applies up to paragraph (e) Step 5.

Using a voltmeter, confirm that the voltage between TP ❶ and the FG (Floating Ground) is within the +35 to +50 V range.

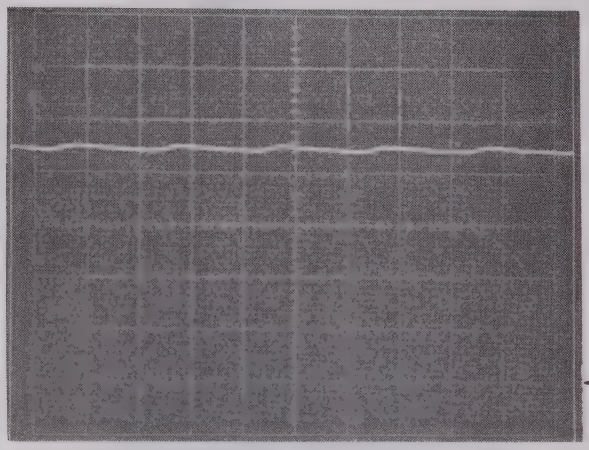

Fig. 3-80 TP ❶ Waveform

If the waveform and voltage are OK, proceed to the next step. If not OK, troubleshoot the circuit (including MOTHER BOARD R-Z10) near TP ❶ .

(b) Step 2

Using a voltmeter, confirm that the voltage between TP ❷ and the FG (Floating Ground) is within the +14 to +18 V range.

If the voltage is OK, proceed to the next step. If not OK, troubleshoot the circuit near TP ❷ .

(c) Step 3

Using an oscilloscope, confirm that the waveform at TP ❸ is as shown i Fig. 3-81.

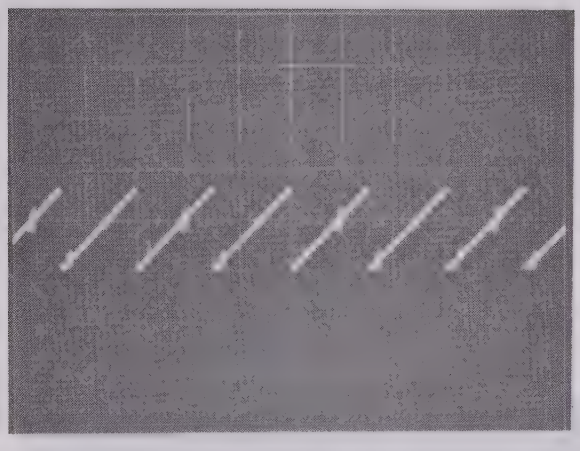

V: 2 V/div
H: 10 µs/div
(Probe ground is at floating ground.)

Fig. 3-81 TP ❸ Waveform

If the waveform is OK, proceed to the next step. If not OK, troubleshoot the circuit near TP ❸ .

(d) Step 4

Using an oscilloscope, confirm that the waveform at TP ❹ and TP ❺ are as shown in Fig. 3-82.

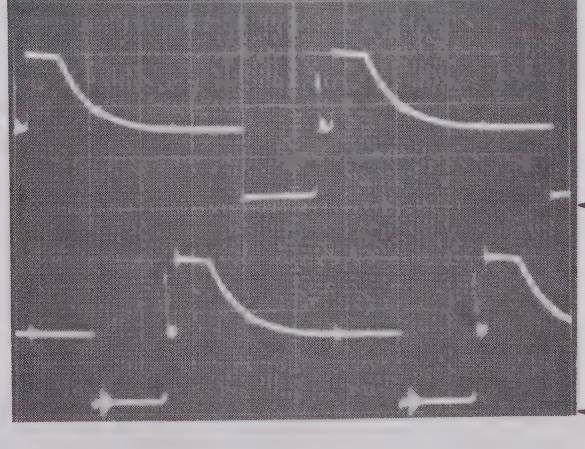

V: 10 V/div
H: 5 µs/div
(Probe ground is at floating ground.)

Fig. 3-82 TP ❹ and TP ❺ Waveforms

If the waveforms are OK, proceed to the next step. If not OK, troubleshoot the circuit near TP ❹ and TP ❺ .

(e) Step 5

Using an oscilloscope, confirm that the waveform at TP ❻ is as shown in Fig. 3-83.

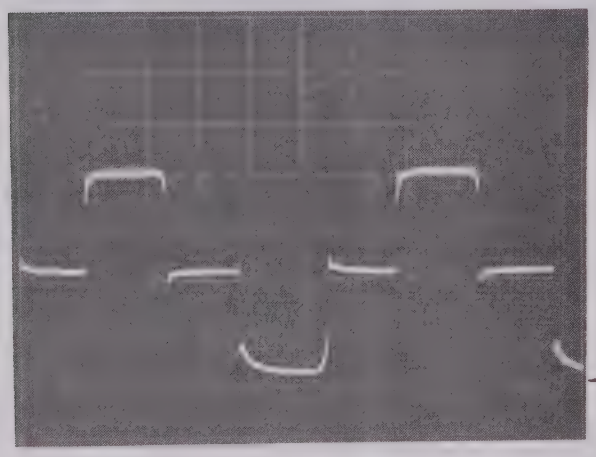

V: 20 V/div
H: 5 µs/div
(Probe ground is at floating ground.)

Fig. 3-83 TP ❻ Waveform

(f) Step 6

Using an oscilloscope, confirm that the waveform at TP ❼ is as shown in Fig. 3-84. At this time, connect the oscilloscope probe ground terminal to pin A of T5.

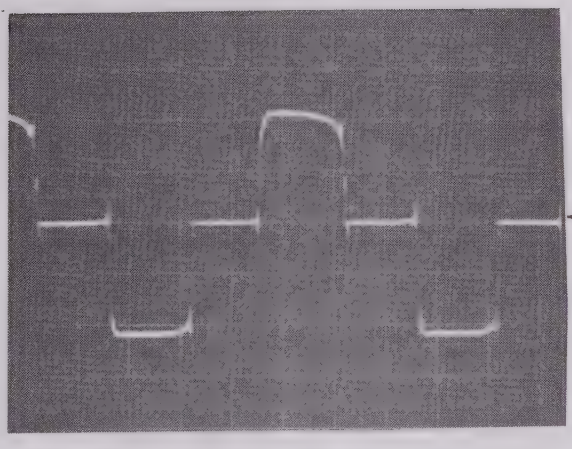

V: 5 V/div
H: 5 µs/div
(Probe ground is at T5-pin A.)

Fig. 3-84 TP ❼ Waveform

If the waveform is OK, proceed to the next step. If not OK, troubleshoot the circuit near TP ❼ .

(g) Step 7

Using a voltmeter, confirm that the voltage between TP ❽ , TP ❾ , TP ❿ and the chassis ground is within the range shown in Table 3-22, respectively.

Table 3-22 +5 V (1), -5.2 V, and -4.5 V Power Supplies

Test Point	Voltage range
TP ❽ (+5 V (1))	+4.9 to +5.5 V
TP ❾ (-5.2 V)	-5.0 to -5.5 V
TP ❿ (-4.5 V)	-4.2 to -5.0 V

If the voltages are OK, the +5 V (1), -5.2 V, and -4.5 V power supplies are OK. If not OK, troubleshoot the circuit near TP ❽ , TP ❾ , and TP ❿ .

(h) Step 8

Using an oscilloscope, confirm that the waveforms at TP ⓫ to TP ⓮ are as shown in Fig. 3-85 to Fig. 3-87. When measuring TP ⓫ to TP ⓭ , connect the ground terminal of the osciloscope probe to the FG (Floating Ground). When measuring TP ⓮ , connect the probe ground terminal to pin 8 of T6.

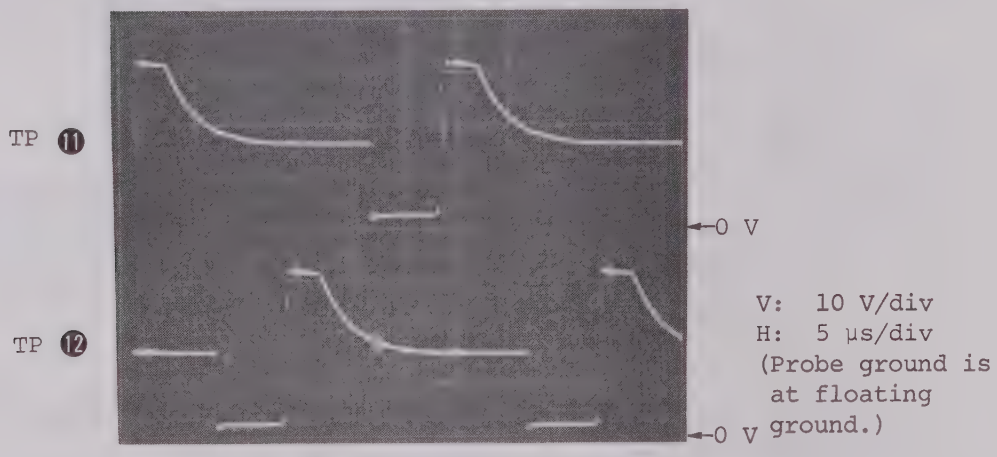

Fig. 3-85 TP ⓫ and TP ⓬ Waveforms

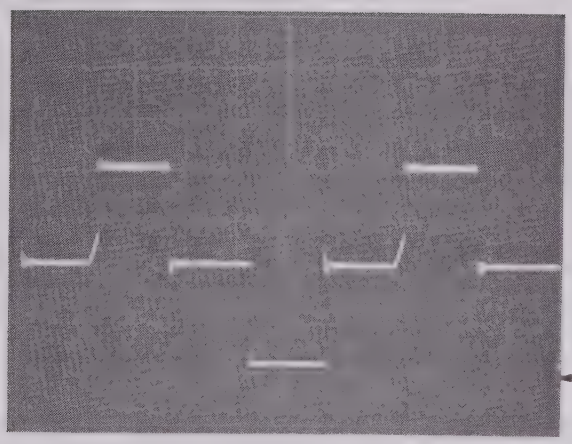

V: 20 V/div
H: 5 µs/div
(Probe ground is at floating ground.)

Fig. 3-86 TP ⓭ Waveform

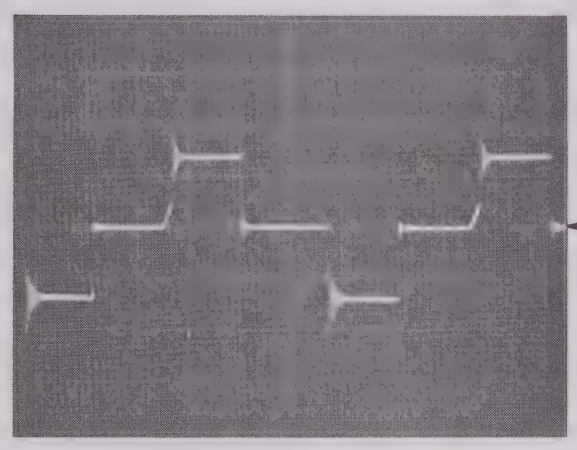

V: 20 V/div
H: 5 µs/div
(Probe ground is at T6-pin 8.)

Fig. 3-87 TP ⓮ Waveform

If the waveforms are OK, proceed to the next step. If not OK, troubleshoot the circuit near TP ⓫ to TP ⓮ .

(i) Step 9

Using a voltmeter, confirm that the voltages between TP ⓯ to TP ⓲ and the chassis ground are within the range shown in Table 3-23, respectively.

Table 3-23 -12 V, +12 V, and +24 V Power Supplies

Test Point		Voltage range
TP ⑮		+13 to +14 V
TP ⑯	(-12 V)	-11.7 to -12.3 V
TP ⑰	(+12 V)	+11.7 to +12.3 V
TP ⑱	(+24 V)	+23 to +25 V

If the voltages are OK, the -12 V, +12 V, and +24 V power supplies are OK. If not OK, troubleshoot the circuit near TP ⑮ to TP ⑱ .

(j) Step 10

Using a voltmeter, confirm that the voltage between the FG (Floating Ground) and TP ⑲ is within the +35 to +50 V range.

If the voltage is not OK, troubleshoot the circuit (including MOTHERBOARD R-Z10) near TP ⑲ . This power supply is supplied to the plug-in unit (sold separately).

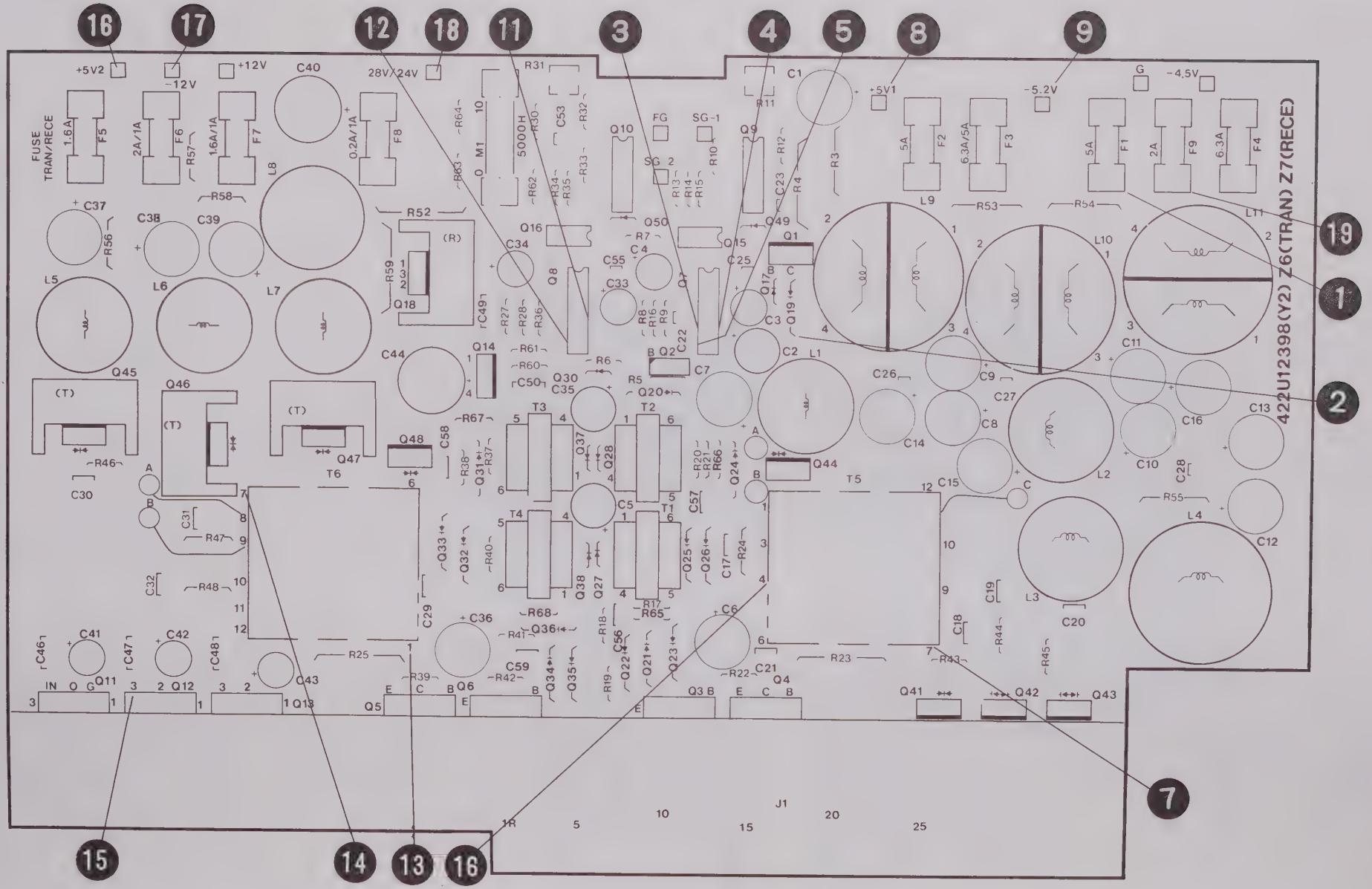

Fig. 3-88 R-Z7 POWER SUPPLY PC Board 35 Parts Layout

APPLICATION

REVISIONS

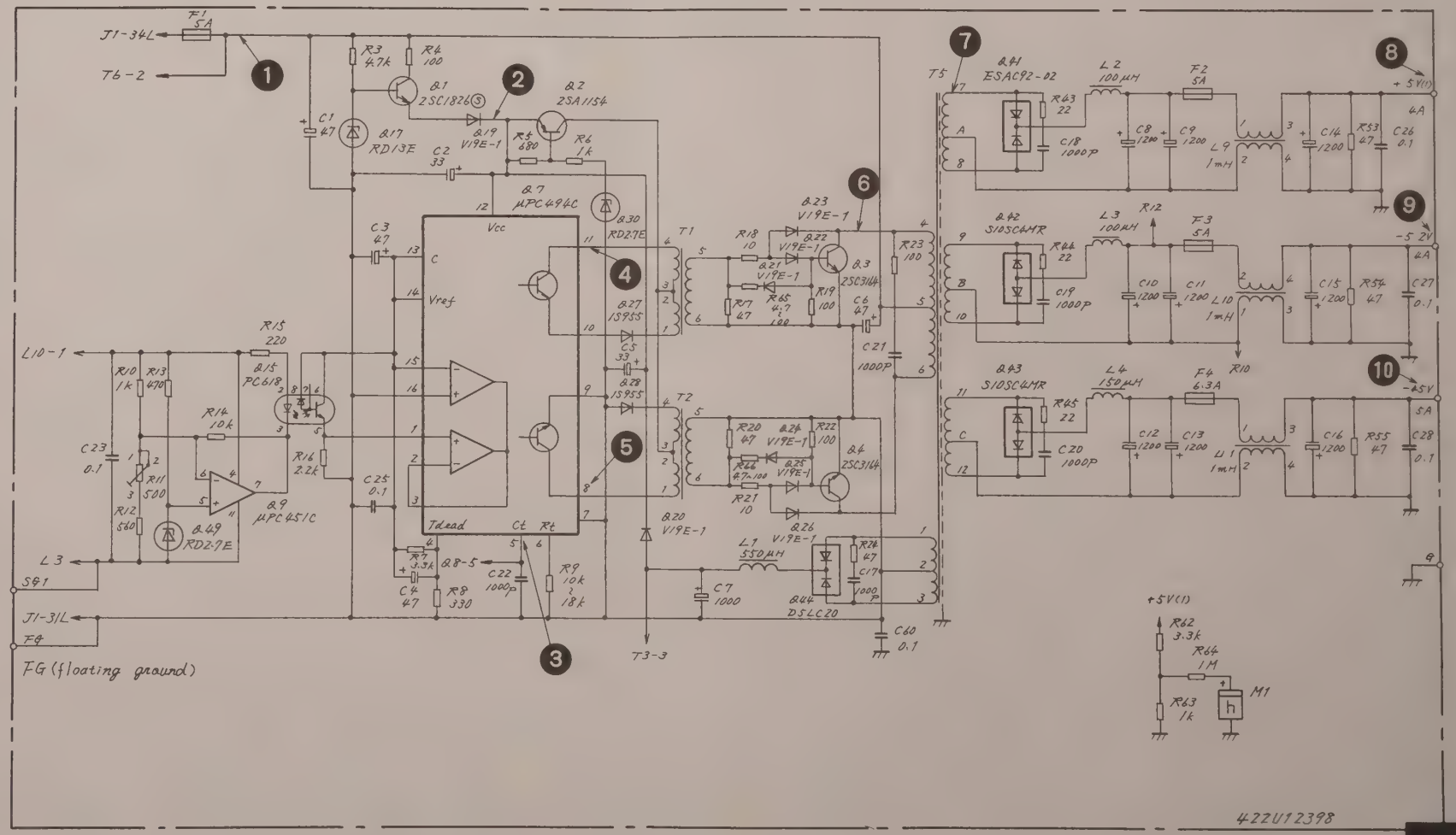

QTY	ITEM	PART No.	DESCRIPTION	MATERIAL	FINISH

35

CHECKED BY	TRACED BY	SCALE
APPROVED BY	DRAWN BY	:

TITLE: R-Z7 POWER SUPPLY Circuit Diagram.

DRAWING No. 43W33429 1/2

Parts List 44W83039

DEP

APPLICATION

REVISIONS

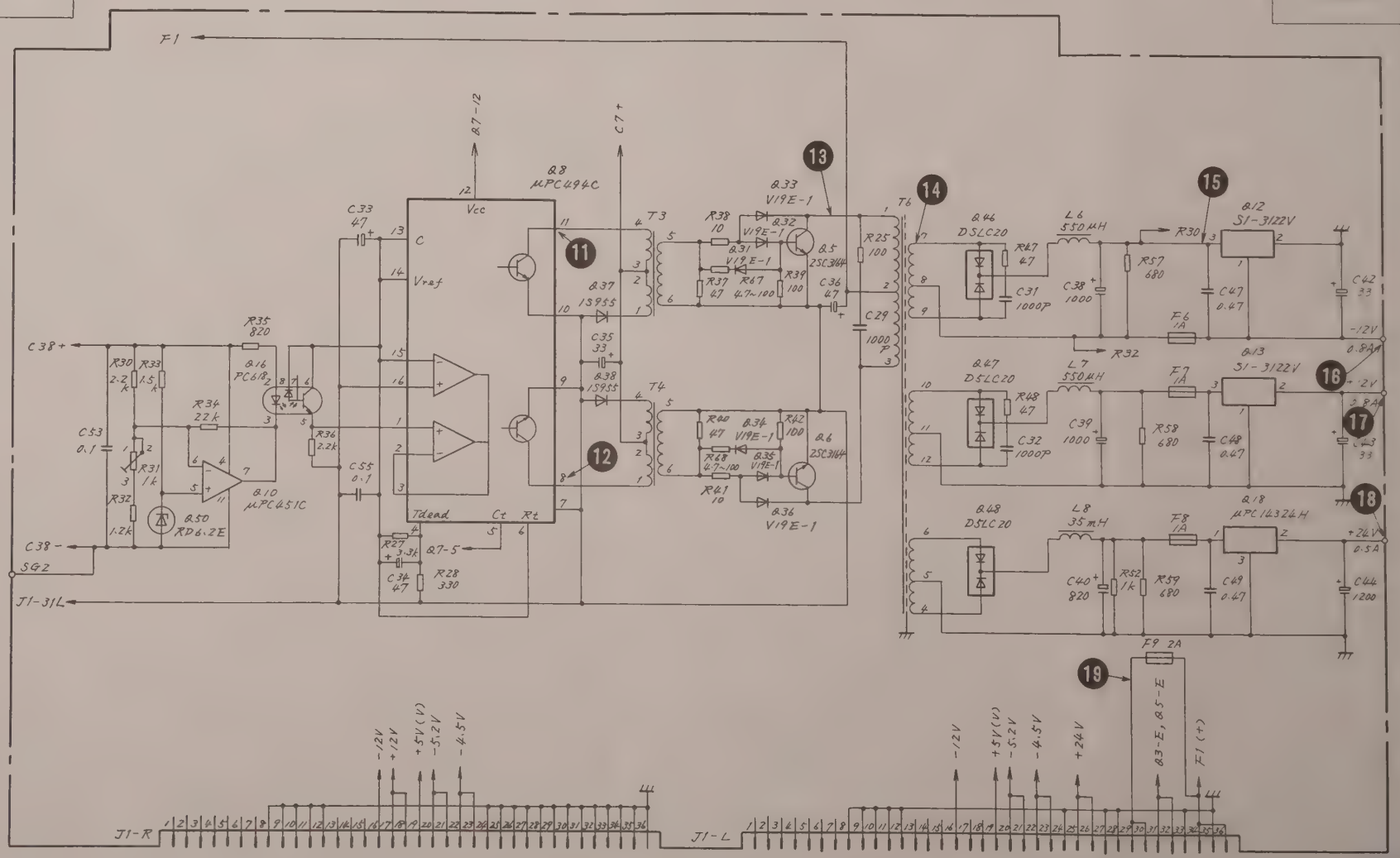

QTY	ITEM	PART No.	DESCRIPTION	MATERIAL	FINISH	NOTE

CHECKED BY | TRACED BY | SCALE

APPROVED BY | DRAWN BY | :

TITLE: R-Z7 POWER SUPPLY Circuit Diagram

DRAWING No. 43W33429 2/2

35

DEP

3.6.3 R-Z1 INPUT 31 , R-Z9 50 Ω/75 Ω TRANSDUCER 37 PC boards

(1) Circuit description

Figure 3-89 shows a block diagram of the R-Z1 and R-Z9 PC boards.

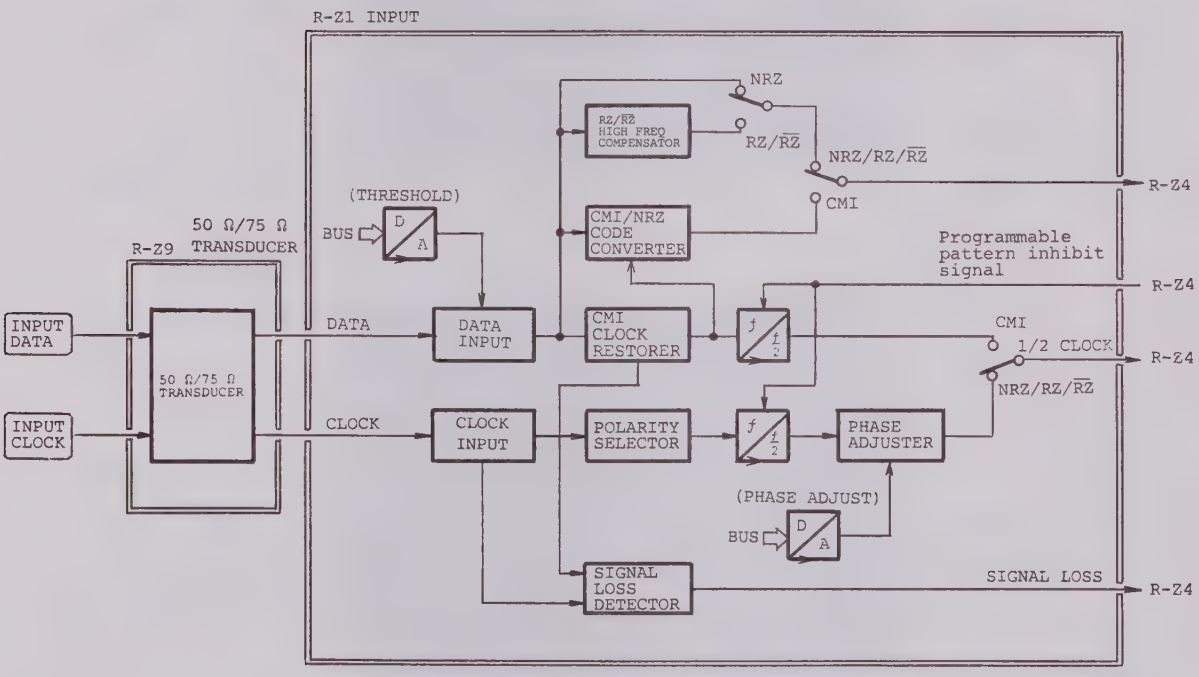

Fig. 3-89 R-Z1 INPUT and R-Z9 50 Ω/75 Ω TRANSDUCER Block Diagram

The input data and input clock from the system under test are input to R-Z9 [50 Ω/75 Ω TRANSDUCER].

R-Z9 is used for impedance matching to the system under test. The clock signal input at R-Z1 (INPUT) is waveform-shaped by CLOCK INPUT and input to POLARITY SELECTOR.

POLARITY SELECTOR selects the clock signal polarity. At 1/2 DIVIDER, the clock signal is converted to a 1/2 data bit rate clock signal and input to PHASE ADJUSTER. PHASE ADJUSTER selects the clock delay time. Also, the data input at R-Z1 is waveform-shaped and branched to four signal routes by DATA INPUT. The first signal route (NRZ pattern) is input to R-Z4 (ERROR DETECTOR). The second signal route (RZ/$\overline{\text{RZ}}$ pattern) is input to RZ/$\overline{\text{RZ}}$ HIGH FREQ COMPENSATOR. RZ/$\overline{\text{RZ}}$ HIGH FREQ COMPENSATOR expands the RZ pulse width by about 700 ps to provide high frequency operation margin. The third and fourth signal routes (CMI pattern) are input to CMI/NRZ CODE CONVERTER and CMI CLOCK RESTORER. CMI/NRZ CODE CONVERTER converts the CMI pattern to NRZ pattern. CMI CLOCK RESTORER regenerates the 139.264 MHz clock signal. This clock signal is converted to a 1/2 data bit rate clock signal at 1/2 DIVIDER.

SIGNAL LOSS DETECTOR judges if there is no input, when there is no input clock for NRZ, RZ, and $\overline{\text{RZ}}$ pattern, and when there is no input DATA or the input DATA frequency is not 139.264 MHz for the CMI pattern.

(2) Troubleshooting and Adjustment

After lifting the R-Z1 PC board using the extender board, perform troubleshooting and adjustment.

(a) Step 1

Panel setting:

	ME522A (T)	ME522A (R)
FREQUENCY	700 MHz	——

Check the TP ❶ , ❷ , and ❸ signal waveforms using a sampling oscilloscope.

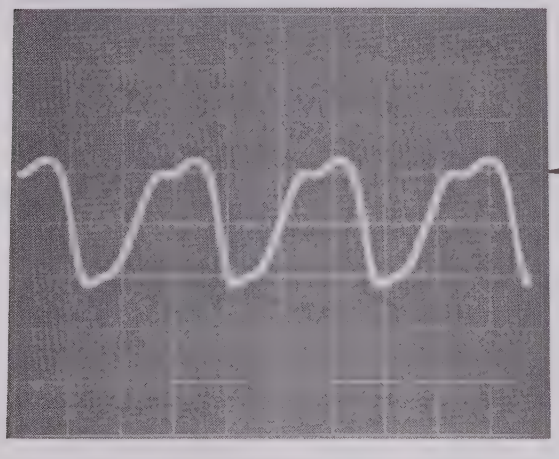

V: 500 mV/div
H: 500 ps/div

Fig. 3-90 TP ❶ Waveform of R-Z1

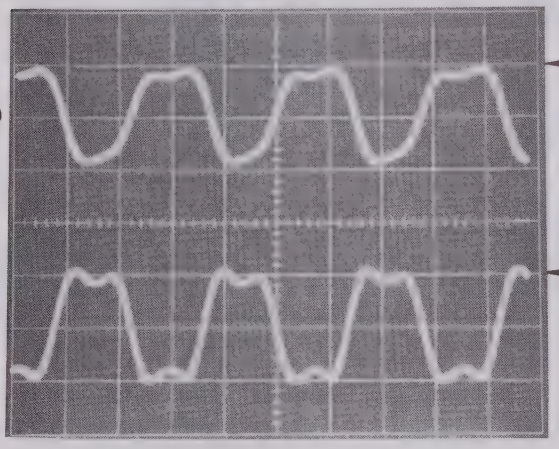

V: 500 mV/div
H: 500 ps/div

Fig. 3-91 TP ❷ and ❸ Waveforms of R-Z1

If the above waveforms are OK, proceed to the next step without performing the following adjustment.

If not OK, perform the following adjustment.

. Adjustment

1. Adjust R10 for approx. -2.5 V by measuring the voltage between R10 and R21 using a dc voltmeter.
2. Adjust R3 for approx. 1.0 Vp-p (amplitude by observing the TP ❶ waveform (Fig. 3-90) using a sampling oscilloscope.
3. Adjust R30 for approx. 50% duty by observing the TP ❷ and ❸ waveforms (Fig. 3-91) using a sampling oscilloscope.

If not OK after performing the above adjustment, troubleshoot the circuit(s) near the faulty test point.

(b) Step 2

Panel setting:

	ME522A (T)	ME522A (R)
FREQUENCY	700 MHz	——
POLARITY	CLOCK	CLOCK/$\overline{\text{CLOCK}}$

Check the TP ❹ and ❺ signal waveforms using a sampling oscilloscope by changing the polarity of the ME522A (R).

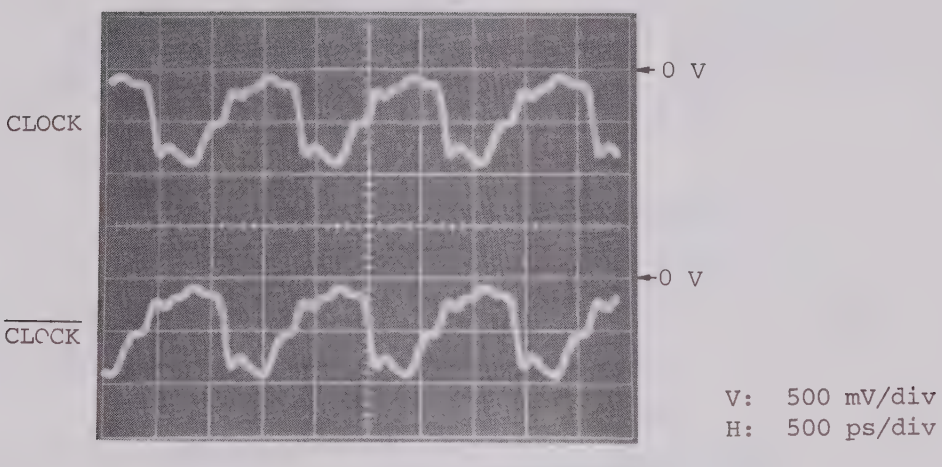

Fig. 3-92 TP ❹ Waveform of R-Z1

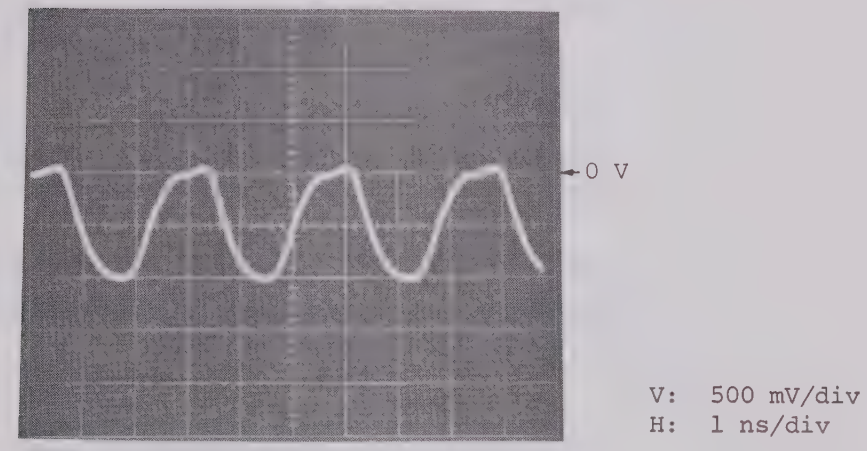

Fig. 3-93 TP ❺ Waveform of R-Z1

If the above waveforms are OK, proceed to the next step without performing the following test. If not OK, perform the following test.

. Check

Check Q108-1 and Q108-3 pin statuses according to Table 3-24 by changing the polarity of the ME522A (R).

Table 3-24

	Status (ECL level)	
	Q108-1	Q108-3
CLOCK	L	H
$\overline{\text{CLOCK}}$	H	L

If not OK after performing the above test, troubleshoot the circuit(s) near the faulty test point.

(c) Step 3

Panel setting:

	ME522A (T)	ME522A (R)
FREQUENCY	700 MHz	——
PHASE ADJUST	——	-5/+5 x 100 ps

Check the TP ❻ signal waveform using a sampling oscilloscope by changing the phase adjust.

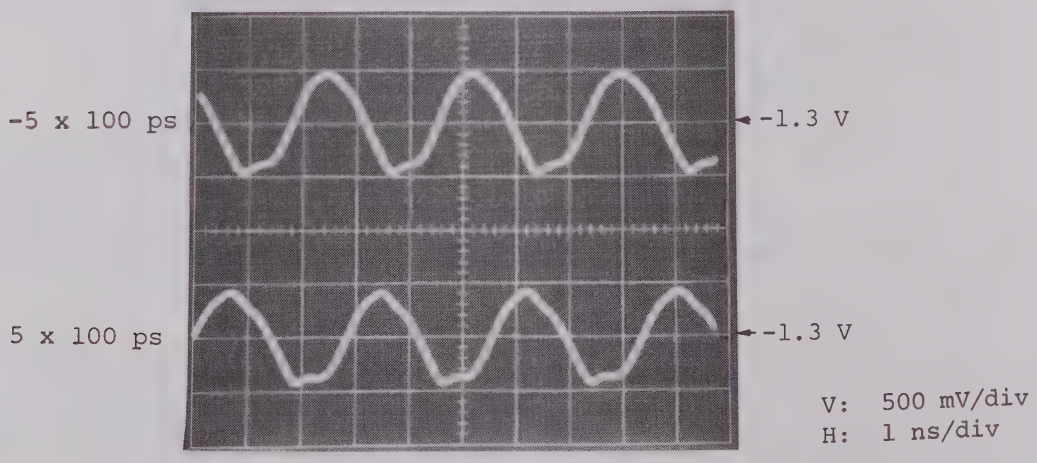

Fig. 3-94 TP ❻ Waveform of R-Z1

If the above waveforms are OK, proceed to the next step without performing the following test. If not OK, perform the following test.

. Check

Check Q116-1 pin voltage and Q117-5 to Q117-12 pin statuses in accordance with Table 3-25 by changing the phase adjust.

Table 3-25

PHASE ADJUST [x 100 ps]	Q116-1 pin voltage [V]	Status (TTL level) Q117 5	6	7	8	9	10	11	12
5	+10.50	L	L	H	L	L	H	L	L
4	+10.90	L	L	H	L	H	H	H	H
3	+11.40	L	L	H	H	H	H	L	L
2	+11.95	L	H	L	L	H	L	H	H
1	+12.40	L	H	L	H	L	H	H	H
0	+13.00	L	H	H	L	L	H	H	H
-1	+13.55	L	H	H	H	L	H	H	L
-2	+14.30	H	L	L	L	H	L	H	L
-3	+15.25	H	L	H	L	L	L	H	H
-4	+16.30	H	L	H	H	H	H	H	H
-5	+17.55	H	H	H	L	L	L	L	H

If not OK after performing the above test, perform the following adjustment.

. Adjustment

Adjust R277 so that the voltage change at Q116-pin 1 becomes approximately 7.10 V when the PHASE ADJUST value is changed from 5 X 100 ps to -5 X 100 ps by operating the PHASE ADJUST [⩓] and [⩔] keys. Next, adjust R267 so that the voltage at Q116-pin 1 becomes +13.00 V when the PHASE ADJUST value is made 0 x 100 ps.

If not OK after performing the above adjustment, troubleshoot the circuit(s) near the faulty test point.

(d) Step 4

Panel setting:

	ME522A (T)	ME522A (R)
FREQUENCY	700 MHz	——
FORMAT	NRZ/RZ/$\overline{\text{RZ}}$	

Check the TP ❼ signal waveform using a sampling oscilloscope.

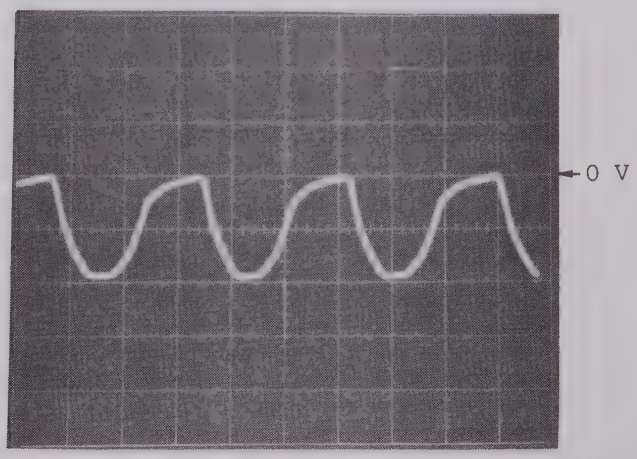

V: 500 mV/div
H: 1 ns/div

Fig. 3-95 TP ❼ Waveform of R-Z1

If the above waveform is OK, proceed to the next step without performing the following test. If not OK, perform the following test.

. Check

Check whether the Q68-3 pin status is set to ECL low level.

If not OK after performing the above test, perform the following adjustment.

. Adjustment

Adjust R143 for approx. 50% duty by observing the TP ❼ waveform (Fig. 3-95) using a sampling oscilloscope.

If not OK after performing the above adjustment, troubleshoot the circuit(s) near the faulty test point.

(e) Step 5

Panel setting:

	ME522A (T)	ME522A (R)
FREQUENCY	700 MHz/139.264 MHz	——
FORMAT	NRZ/RZ/$\overline{\text{RZ}}$/CMI	

Check the TP ❽ signal waveform using a sampling oscilloscope by changing the frequency and format.

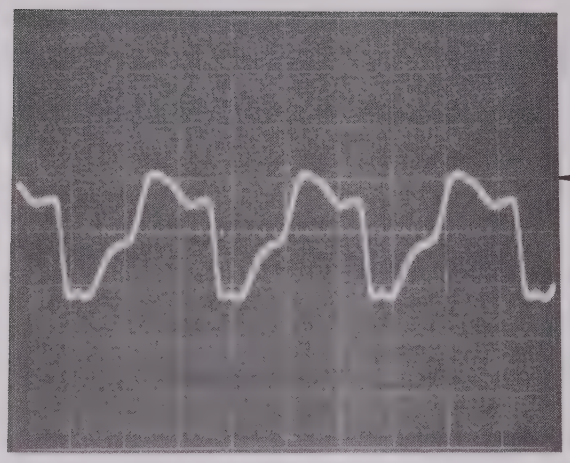

V: 500 mV/div
H: 1 ns/div

(a) FREQUENCY; 700 MHz
FORMAT; NRZ/RZ/$\overline{RZ}$

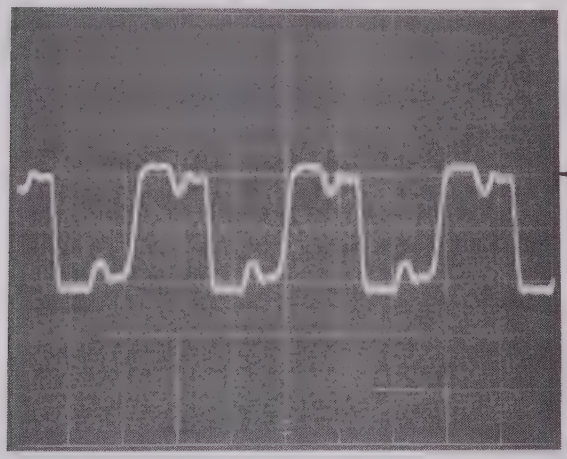

V: 500 mV/div
H: 5 ns/div

(b) FREQUENCY; 139.264 MHz
FORMAT; CMI

Fig. 3-96 TP ❽ Waveform of R-Z1

If the above waveforms are OK, proceed to the next step without performing the following adjustment. If not OK, perform the following adjustment.

Adjustment

Adjust R159 for approx. 50% duty by observing the TP ❽ waveform (Fig. 3-96(a)) using a sampling oscilloscope.

If not OK after performing the above adjustment, troubleshoot the circuit(s) near the faulty test point.

(f) Step 6

Panel setting:

	ME522A (T)	ME522A (R)
FREQUENCY	700 MHz/139.264 MHz	——
PATTERN	PRBS $2^{23}-1$	
FORMAT	NRZ/RZ/$\overline{\text{RZ}}$/CMI	

Check the TP ❾ and ❿ signal waveforms using a sampling oscilloscope by changing the frequency and format.

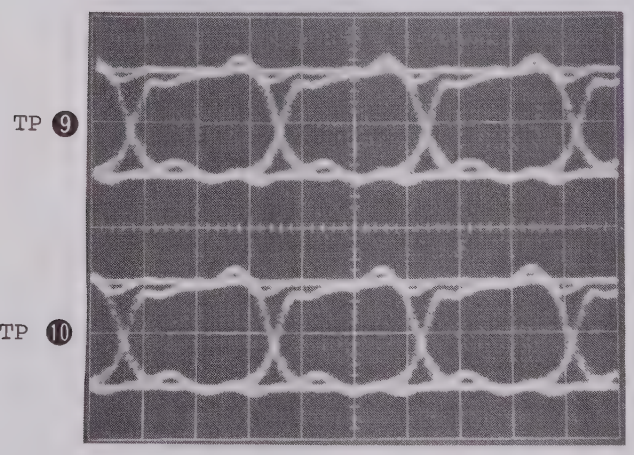

V: 500 mV/div
H: 500 ps/div

(a) FREQUENCY; 700 MHz
FORMAT; NRZ

Fig. 3-97 TP ❾ and ❿ Waveforms of R-Z1

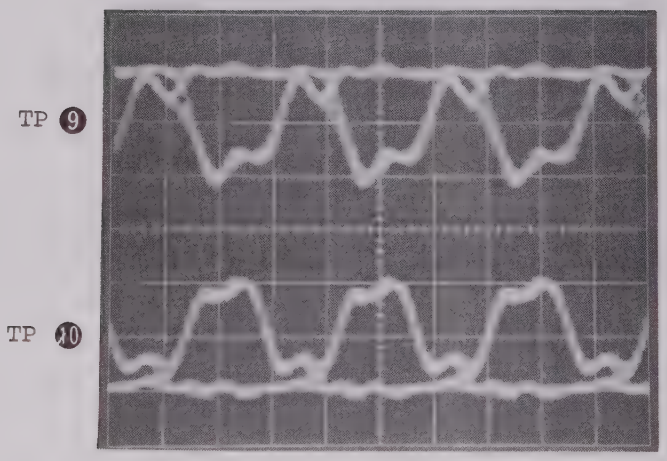

V: 500 mV/div
H: 500 ps/div

(b) FREQUENCY; 700 MHz
FORMAT; RZ

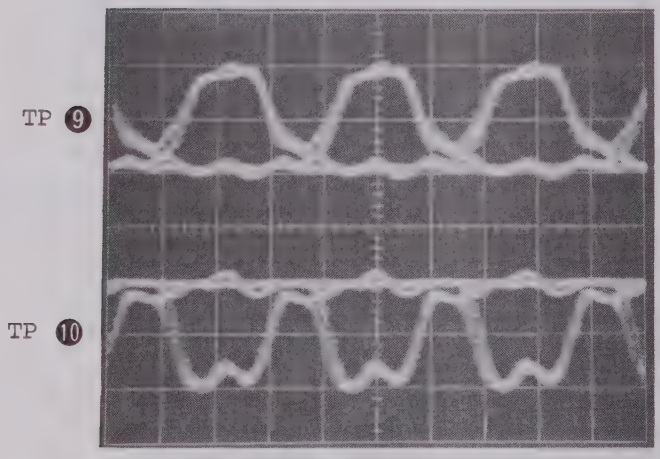

V: 500 mV/div
H: 500 ps/div

(c) FREQUENCY; 700 MHz
FORMAT; $\overline{RZ}$

Fig. 3-97 TP ⑨ and ⑩ Waveforms of R-Z1 (Continued)

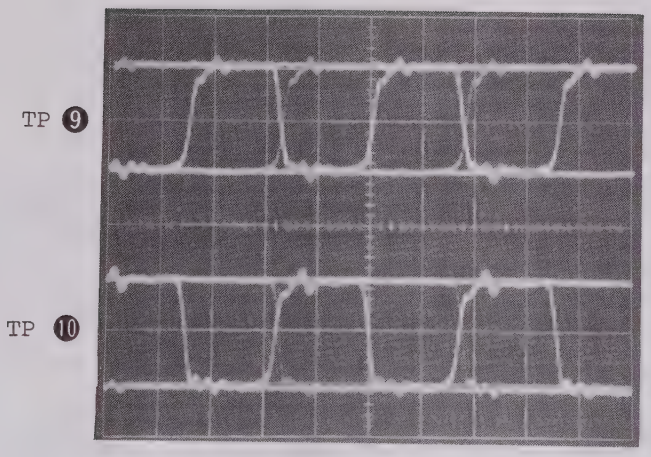

(d) FREQUENCY; 139.264 MHz
FORMAT; CMI

Fig. 3-97 TP ❾ and ❿ Waveforms of R-Z1 (Continued)

If the above waveforms are OK, proceed to the next step without performing the following adjustment. If not OK, perform the following adjustment.

. Adjustment

1. Adjust R170 for approx. 1.0 Vp-p amplitude by observing the TP ❾ and ❿ waveforms (Fig. 3-97) using a sampling oscilloscope.
2. Set the cathode voltage of Q111 to 0.0 V by operating the THRESHOLD [∧] and [∨] keys and adjust R72 so that the voltage at Q24-pin 1 becomes -2.50 V. Then adjust R77 so that the base voltage of Q27 is +3.16 V.

3. Internal threshold adjustment

Panel setting:

	ME522A (T)	ME522A (R)
FREQUENCY	700 MHz	——
AMPLITUDE	1.0 Vp-p	——
OFFSET	+3.50 to -1.00 V	——
THRESHOLD	——	+3.00 to -1.50 V
FORMAT	NRZ/RZ/$\overline{\text{RZ}}$	

3.1 First, set FORMAT to RZ and make the following adjustments:

(1) Set OFFSET to +3.50 V, vary THRESHOLD and measure the Q111 cathode voltage range over which there is no error and find its center point value (A).

Set the OFFSET to -1.00 V and find the center point value (B) similarly.

(2) Adjust R274 so that the Q111 cathode voltage change becomes [A-B] when the THRESHOLD is changed from +3.00 to -1.50 V.

(3) Set OFFSET to +0.50 V, vary the THRESHOLD and measure the Q111 cathode voltage range over which there is no error and adjust R265 with 0.0 V THRESHOLD so that the Q111 cathode voltage becomes to the center point value.

3.2 Next, set FORMAT to $\overline{RZ}$ and make the following adjustment. (Note: Do not adjust R274 and R265.) Set OFFSET to +0.50 V, vary the THRESHOLD and measure the Q111 cathode voltage range over which there is no error and adjust R264 with 0.0 V THRESHOLD so that the Q111 cathode voltage becomes to the center point value.

3.3 Finally, set FORMAT to NRZ and make the following adjustment. (Note: Do not adjust R274 and R265.) Set OFFSET to +0.50 V, vary the THRESHOLD and measure the Q111 cathode voltage range over which there is no error and adjust R263 with 0.0 V THRESHOLD so that the Q111 cathode voltage becomes to the center point value.

If not OK after performing the above adjustment, troubleshoot the circuit(s) near the faulty test point.

(g) Step 7

Panel setting:

	ME522A (T)	ME522A (R)
FREQUENCY	700 MHz/139.264 MHz	——
PATTERN	PRBS $2^{23}-1$	
FORMAT	NRZ/RZ/$\overline{RZ}$/CMI	

Check the TP ⓫ , ⓬ , ⓭ and ⓮ signal waveforms using a sampling oscilloscope by changing the frequency and format.

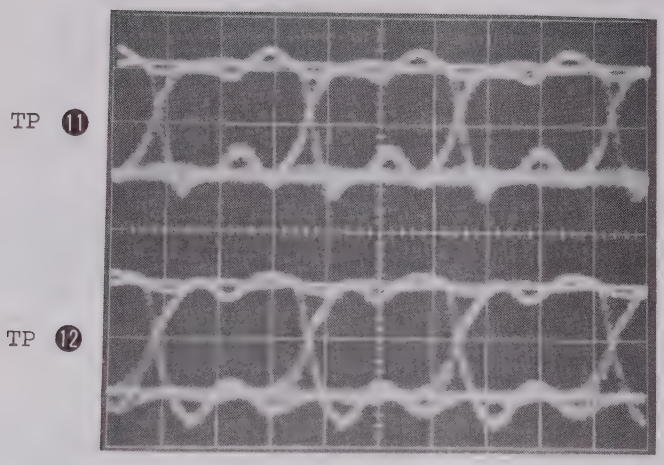

(a) FREQUENCY; 700 MHz
FORMAT; NRZ

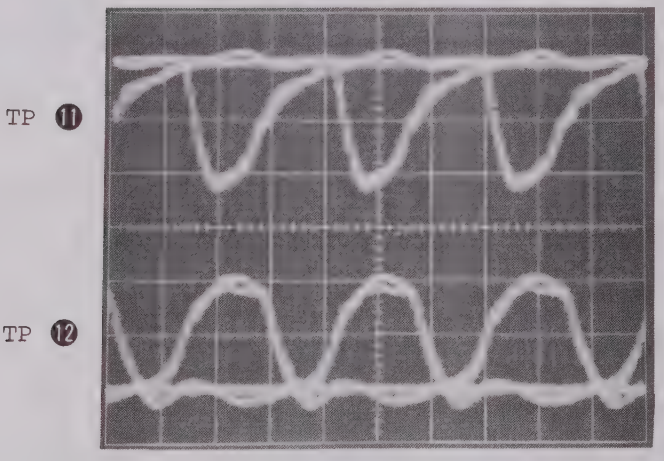

(b) FREQUENCY; 700 MHz
FORMAT; RZ

Fig. 3-98 TP ⓫ and ⓬ Waveforms of R-Z1

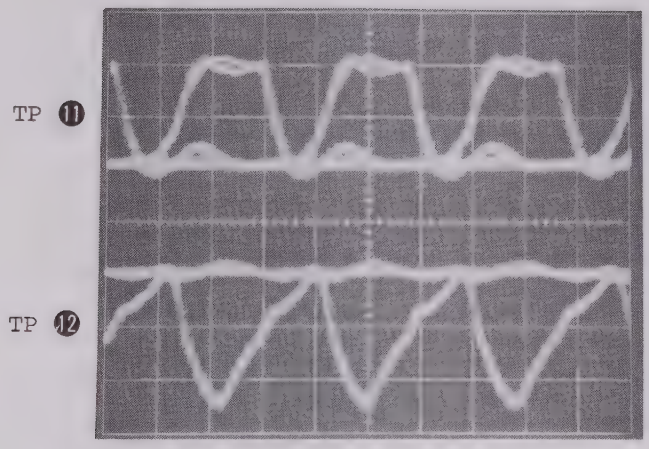

V: 500 mV/div
H: 500 ns/div

(c) FREQUENCY; 700 MHz
FORMAT; RZ

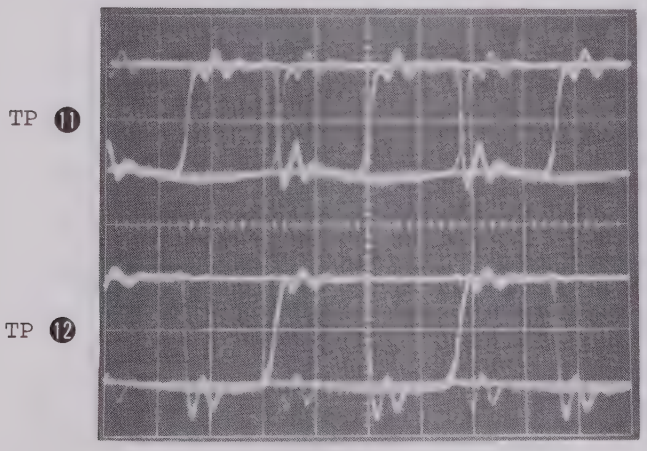

V: 500 mV/div
H: 2 ns/div

(d) FREQUENCY; 139.264 MHz
FORMAT; CMI

Fig. 3-98 TP ⓫ and ⓬ Waveforms of R-Z1 (Continued)

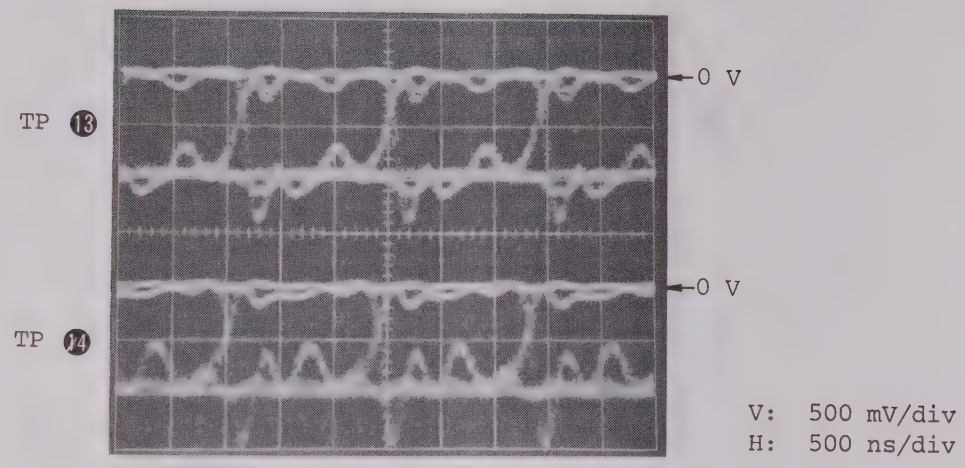

(a) FREQUENCY; 700 MHz
FORMAT; NRZ

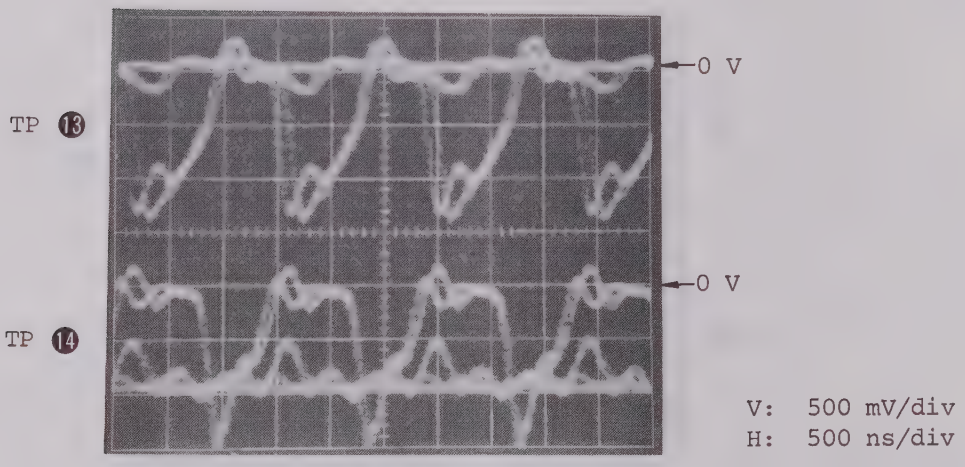

(b) FREQUENCY; 700 MHz
FORMAT: RZ

Fig. 3-99 TP ⑬ and ⑭ Waveforms of R-Z1

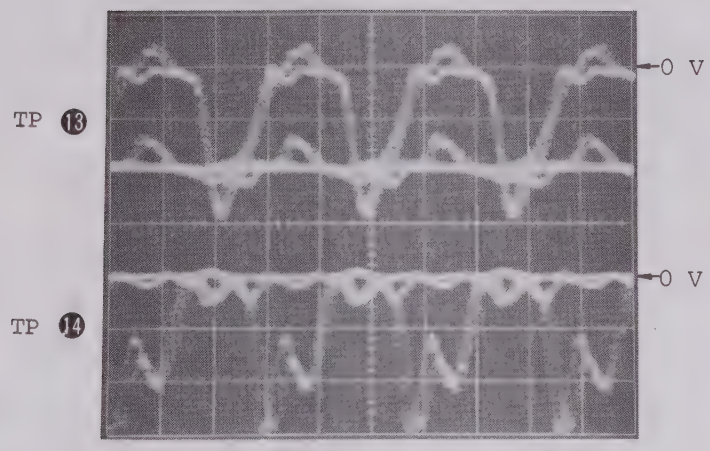

(c) FREQUENCY: 700 MHz
FORMAT; RZ

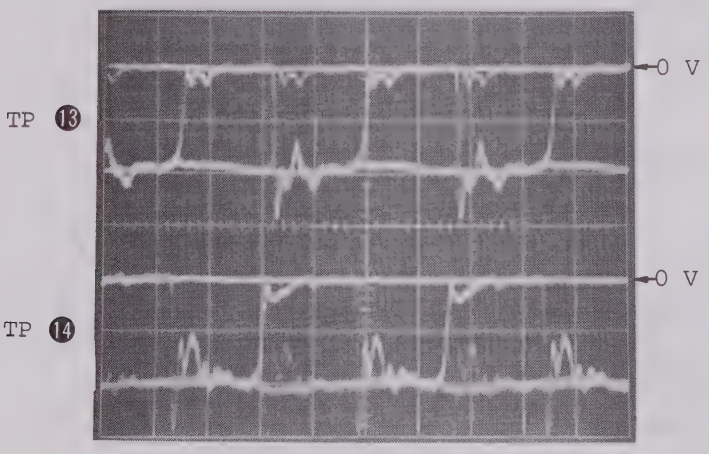

(d) FREQUENCY; 139.264 MHz
FORMAT; CMI

Fig. 3-99 TP ⑬ and ⑭ Waveforms of R-Z1
(Continued)

If the above waveforms are OK, proceed to the next step without performing the following adjustment. If not OK, perform the following adjustment.

. Adjustment

1. Adjust R178 for approx. 1.0 Vp-p amplitude by observing the TP ⓫ and ⓬ waveforms (Fig. 3-98) using a sampling oscilloscope.
2. Adjust R189 for approx. 1.0 Vp-p amplitude by observing the TP ⓭ and ⓮ waveforms (Fig. 3-97) using a sampling oscilloscope.

If not OK after performing the above adjustments, troubleshoot the circuit(s) near the faulty test point.

(h) Step 8

Panel setting:

	ME522A (T)	ME522A (R)
FREQUENCY	700 MHz	——
PATTERN	PRBS $2^{23}-1$	
FORMAT	NRZ/RZ/$\overline{\text{RZ}}$	

Check the TP ⓯ , ⓰ , ⓱ , and ⓲ waveforms using a sampling oscilloscope by changing the format.

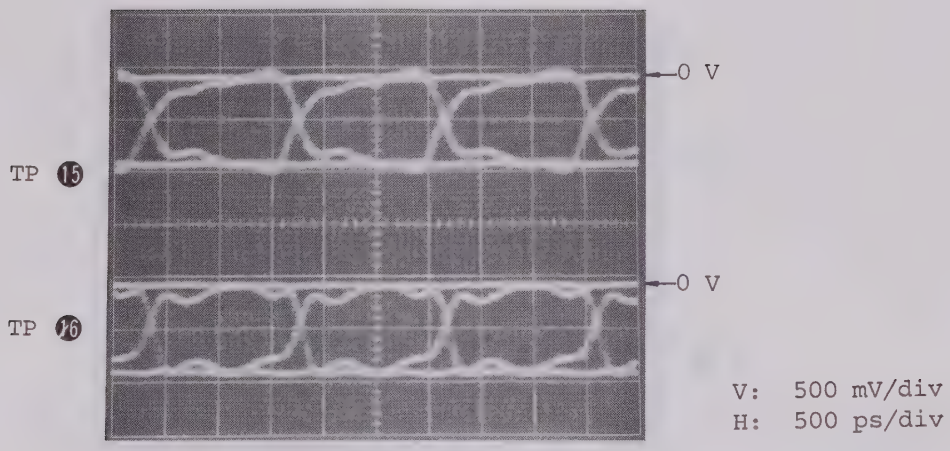

(a) FORMAT; NRZ

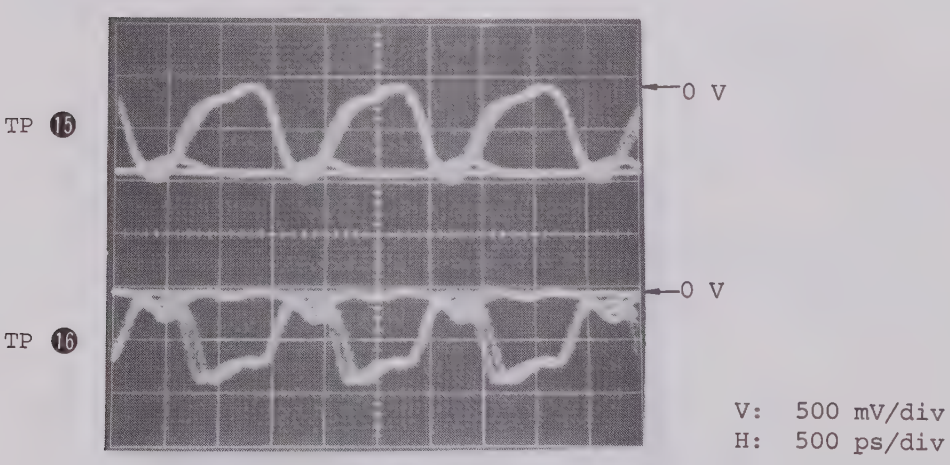

(b) FORMAT; RZ

Fig. 3-100 TP ⑮ and ⑯ Waveforms of R-Z1

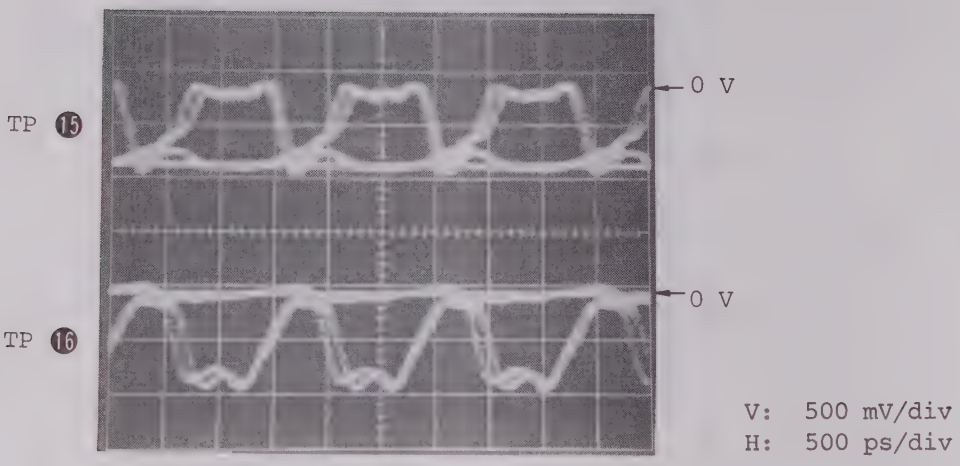

(c) FORMAT; $\overline{RZ}$

Fig. 3-100 TP ⓯ and ⓰ Waveforms of R-Z1 (Continued)

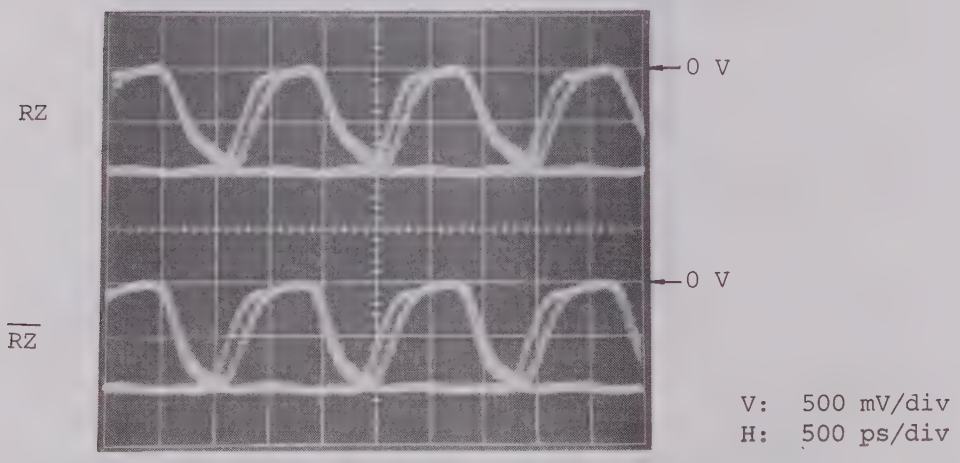

Fig. 3-101 TP ⓱ Waveform of R-Z1

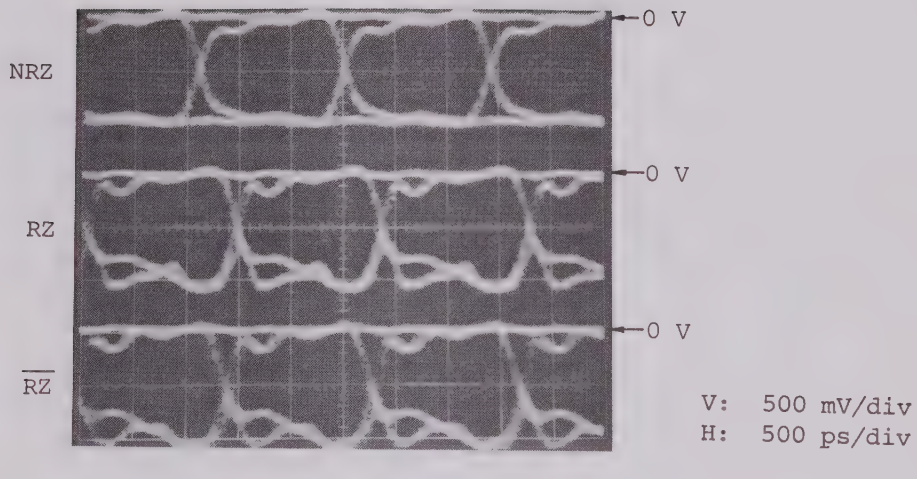

Fig. 3-102 TP ⓲ Waveforms of R-Z1

If the above waveforms are OK, proceed to the next step without performing the following test. If not OK, perform the following test.

. Check

Check the Q108-2, Q108-4 and Q108-15 pin statuses according to Table 3-26 by changing the format.

Table 3-26

FORMAT	Status (ECL level)		
	Q108-2	Q108-4	Q108-15
NRZ	L	H	H
RZ	L	H	L
$\overline{RZ}$	H	L	L

If not OK after performing the above test, perform the following adjustment.

. Adjustment

1. Adjust R213 for approx. 50% duty by observing the TP ⓯ and ⓰ waveforms (Fig. 3-100) using a sampling oscilloscope.
2. Adjust R252 for approx. 50% duty by observing the TP ⓱ waveform (Fig. 3-101) using a sampling oscilloscope.
3. Adjust R247 for approx. 50% duty by observing the TP ⓲ waveform (Fig. 3-102) using a sampling oscilloscope.

If not OK after performing the above adjustment, troubleshoot the circuit(s) near the faulty test point.

(i) Step 9

Panel setting:

	ME522A (T)	ME522A (R)
FREQUENCY	700 MHz/139.264 MHz	——
PATTERN	PRBS $2^{23}-1$	
FORMAT	NRZ/RZ/$\overline{\text{RZ}}$/CMI	

Check the TP ⓳ waveform using a sampling oscilloscope by changing the frequency and format.

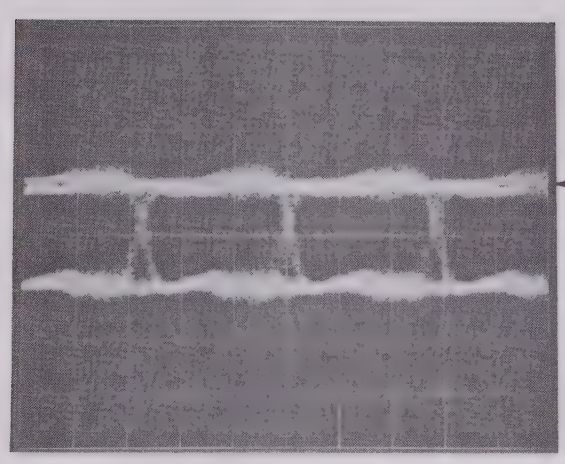

V: 500 mV/div
H: 500 ps/div

(a) FREQUENCY: 700 MHz
FORMAT; NRZ/RZ/$\overline{RZ}$

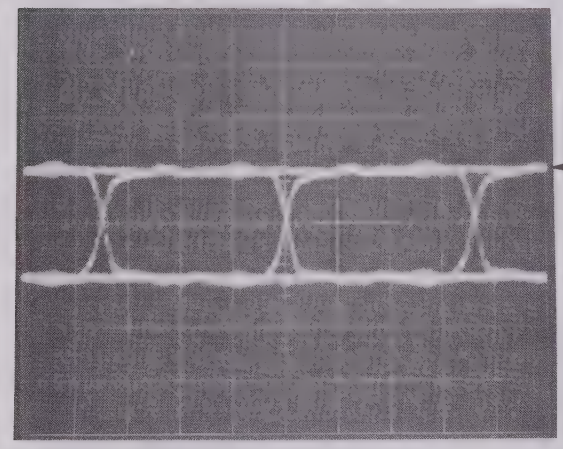

V: 500 mV/div
H: 2 ns/div

(b) FREQUENCY; 139.264 MHz
FORMAT: CMI

Fig. 3-103 TP ⑲ Waveforms of R-Z1

If the above waveform is OK, proceed to the next step without performing the following adjustment. If not OK, perform the following adjustment.

. Adjustment

Adjust R261 for approx. 50% duty by observing the TP ⑲ waveform (Fig. 3-103 (a)) using a sampling oscilloscope.

If not OK after performing the above adjustment, troubleshoot the circuit(s) near the faulty test point.

(j) Step 10

Panel setting:

	ME522A (T)	ME522A (R)
FREQUENCY	139.264 MHz	——
PATTERN	PRBS $2^{23}-1$	
FORMAT	——	CMI

Check the TP ⑳ , ㉑ , ㉒ , ㉓ , and ㉔ signal waveforms using a sampling oscilloscope.

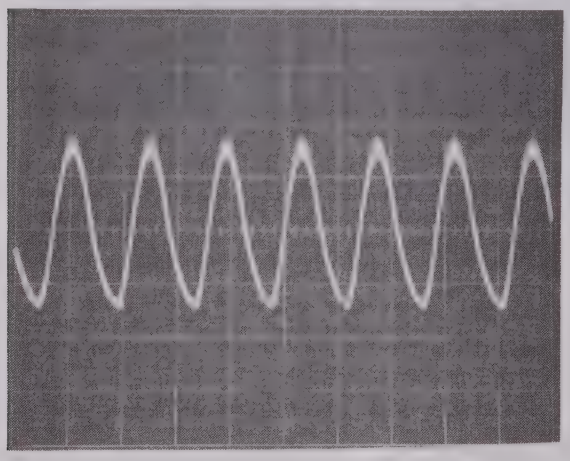

V: 500 mV/div
H: 5 ns/div

Fig. 3-104 TP ⑳ Waveform of R-Z1

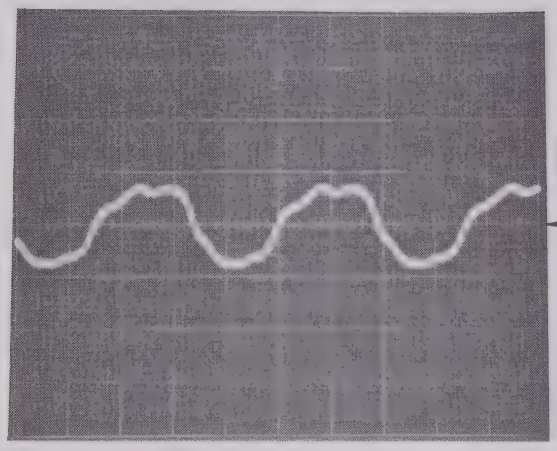

Fig. 3-105 TP ㉑ Waveform of R-Z1

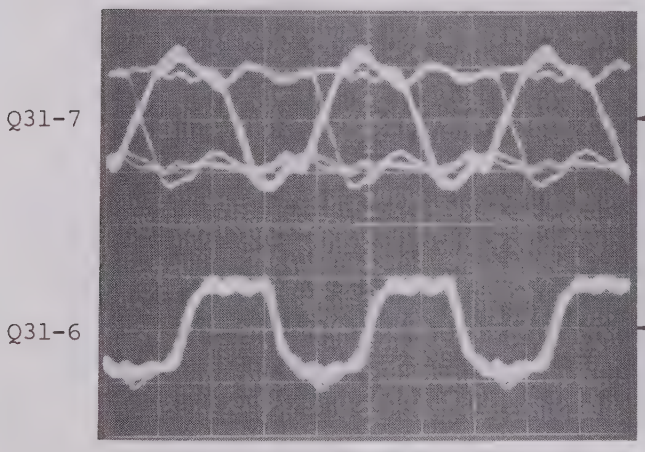

Fig. 3-106 TP ㉒ Waveforms of R-Z1

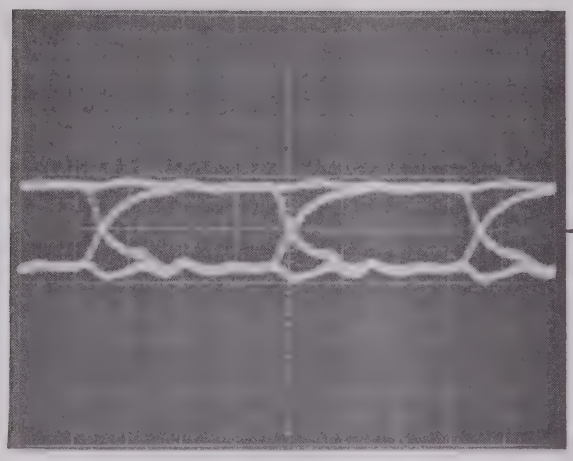

Fig. 3-107 TP ㉓ Waveform of R-Z1

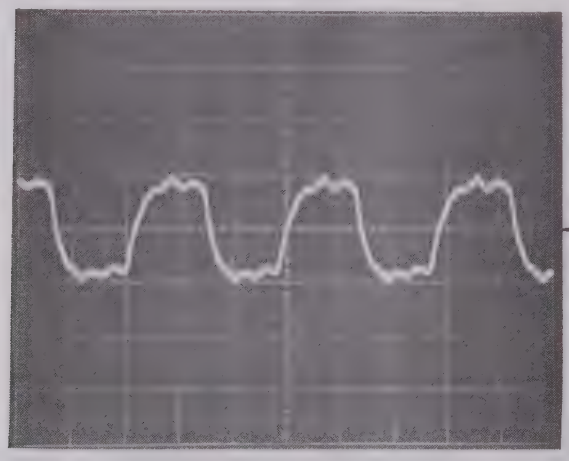

Fig. 3-108 TP ㉔ Waveform of R-Z1

If the above waveform is OK, proceed to the next step without performing the following test. If not OK, perform the following test.

. Check

Check that Q29-6 and Q32-5 pin statuses are set to ECL low level.

If not OK after performing the above test, perform the following adjustment.

. Adjustment

1. Adjust L1 for the maximum amplitude by observing the TP ⑳ waveform (Fig. 3-103) using a sampling oscilloscope.
2. Adjust R96 for approx. 50% duty by observing the TP ㉑ waveform (Fig. 3-105) using a sampling oscilloscope.

If not OK after performing the above adjustment, troubleshoot the circuit(s) near the faulty test point.

(k) Step 11

Panel setting:

	ME522A (T)	ME522A (R)
FREQUENCY	700 MHz/139.264 MHz	——
PATTERN	PRBS $2^{23}-1$	
FORMAT	NRZ/RZ/$\overline{\text{RZ}}$/CMI	

Check whether TP ㉕ , ㉖ , and ㉗ statuses are set to TTL low level using an oscilloscope by changing the frequency and format.

If the above tests are OK, Z1 is OK. If not OK, perform the following test.

. Check

Check Q107-2 and Q107-10 pin statuses in accordance with Table 3-27 by changing the format of the ME522A (R).

Table 3-27 Q107-2 and Q107-10 pin Statuses

FORMAT	Status (TTL level)	
	Q107-2	Q107-10
NRZ/RZ/$\overline{RZ}$	L	H
CMI	H	L

If not OK after performing the above test, perform the following adjustment.

. Adjustment

1. Adjust R80 for approx. 1.6 V by measuring the Q10-2 pin voltage using a dc voltmeter.
2. Adjust R124 for approx. 1.7 V by measuring the Q42-2 pin voltage using a dc voltmeter.

If not OK after performing the above adjustment, troubleshoot the circuit(s) near the faulty test point.

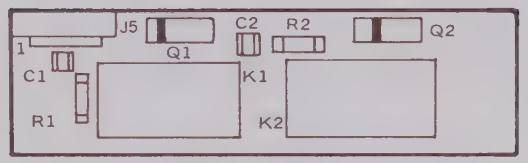

Fig. 3-109 R-Z9 50 Ω/75 Ω TRANSDUCER PC Board 37 Parts Layout

APPLICATION	REVISIONS

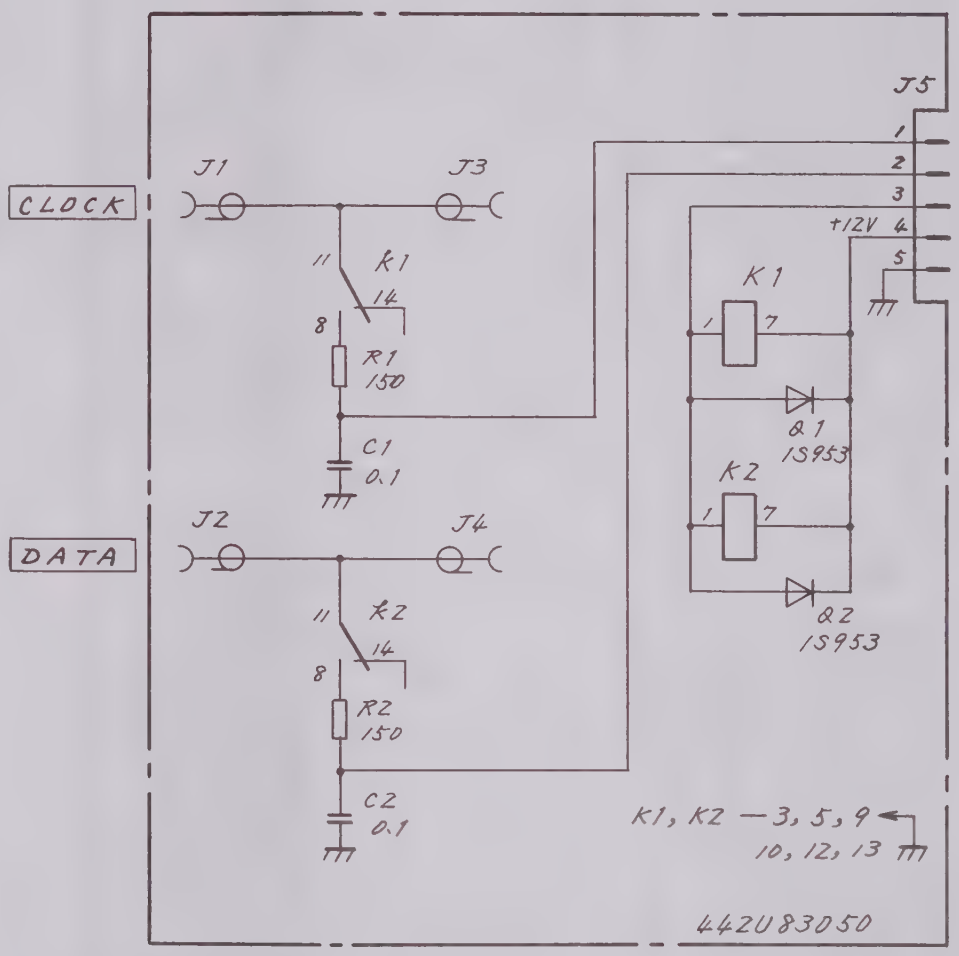

Parts List 44W83041

37

QTY	ITEM	PART No.	DESCRIPTION	MATERIAL	FINISH	NOTE

CHECKED BY	TRACED BY	SCALE
APPROVED BY	DRAWN BY	:

DEP

TITLE: R-Z9 50Ω/75Ω TRANSDUCER Circuit Diagram.

DRAWING No. 44W83042 1/1

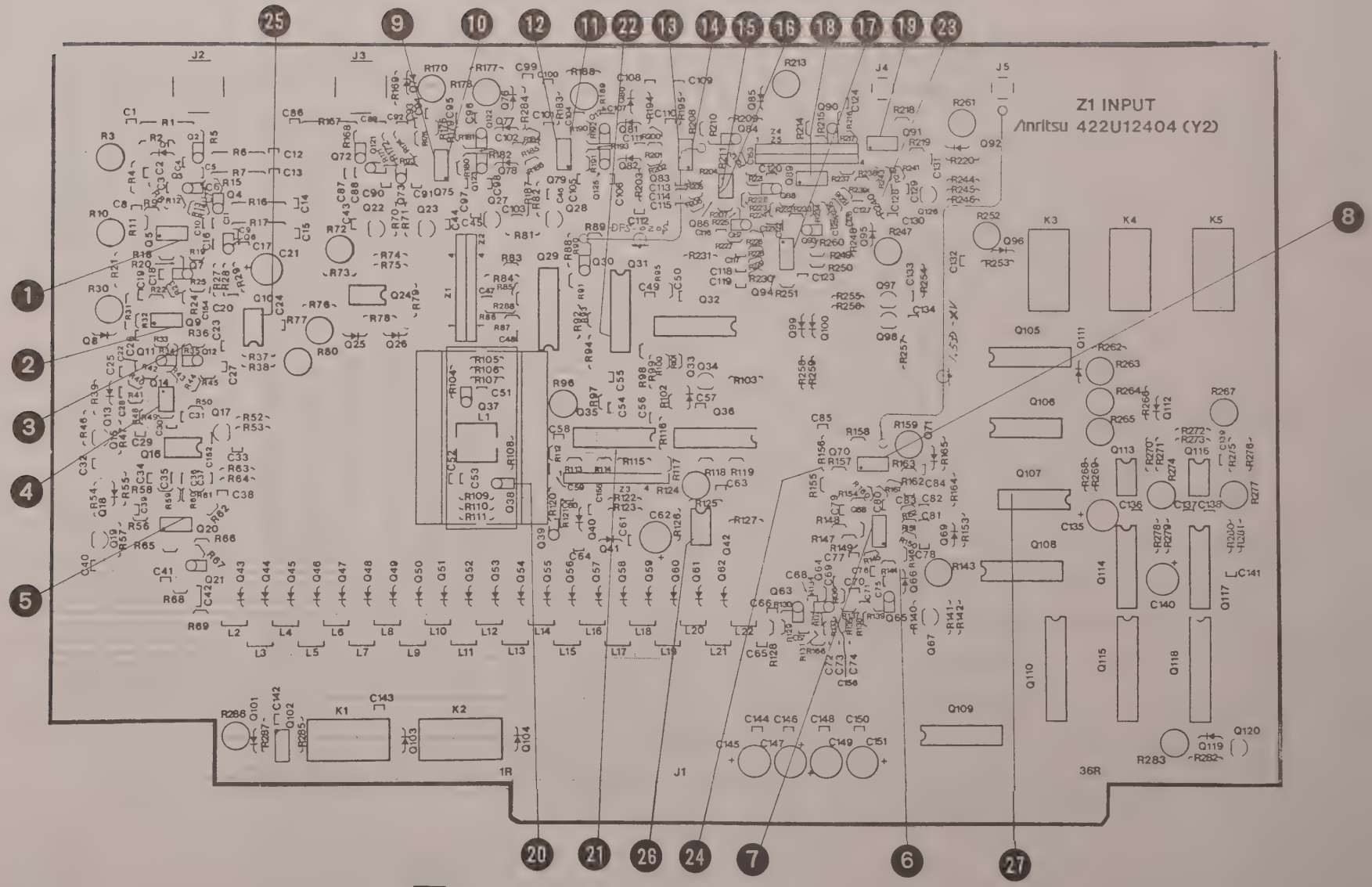

Fig. 3-110 R-Z1 INPUT PC Board 31 Parts Layout

APPLICATION

REVISIONS

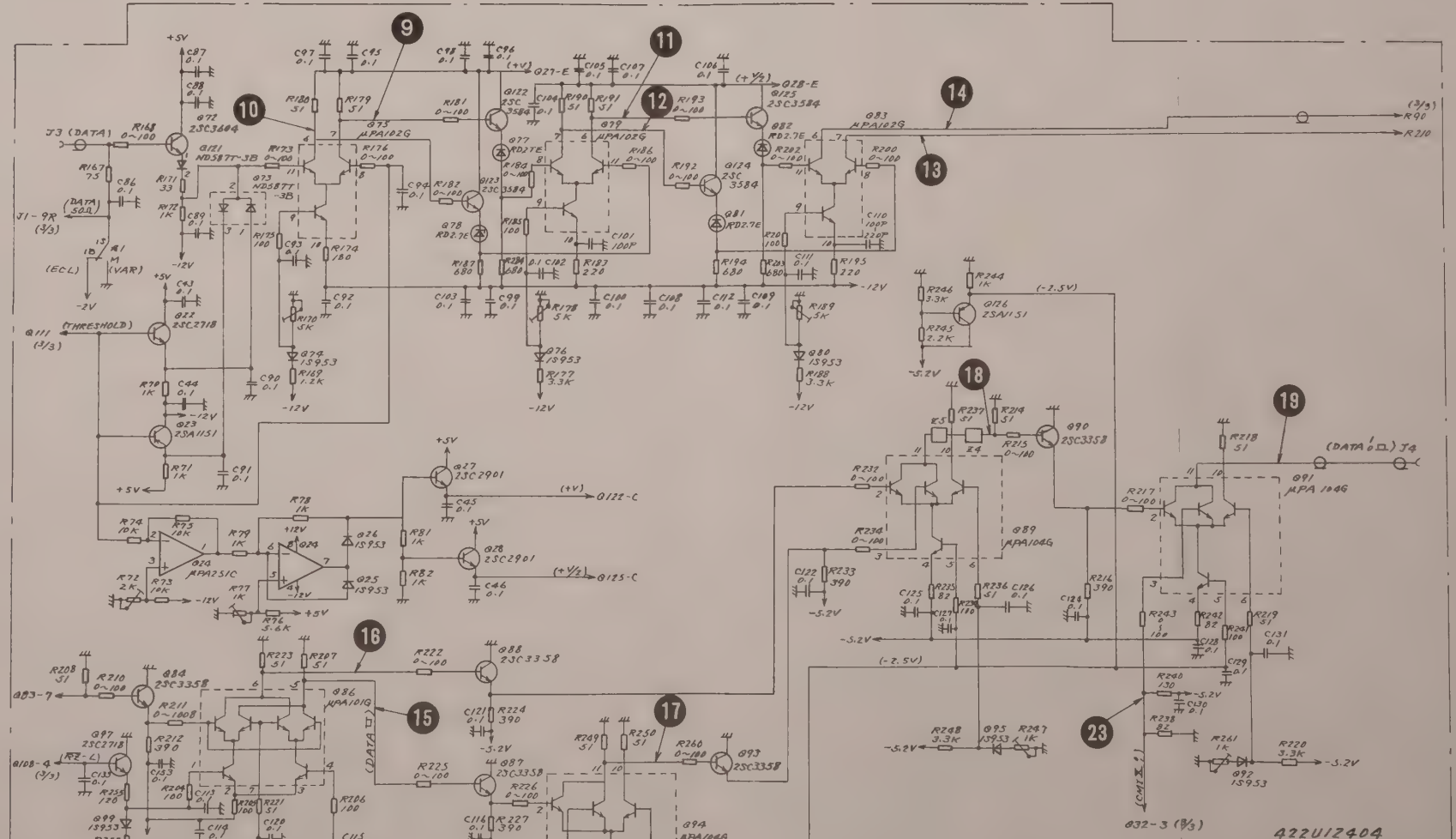

QTY	ITEM	PART No.	DESCRIPTION	MATERIAL	FINISH

CHECKED BY	TRACED BY	SCALE	31
APPROVED BY	DRAWN BY	:	

TITLE R-ZI INPUT Circuit Diagram

DRAWING No. 43W33423 1/3

Parts List 44W83033

DEP

APPLICATION

REVISIONS

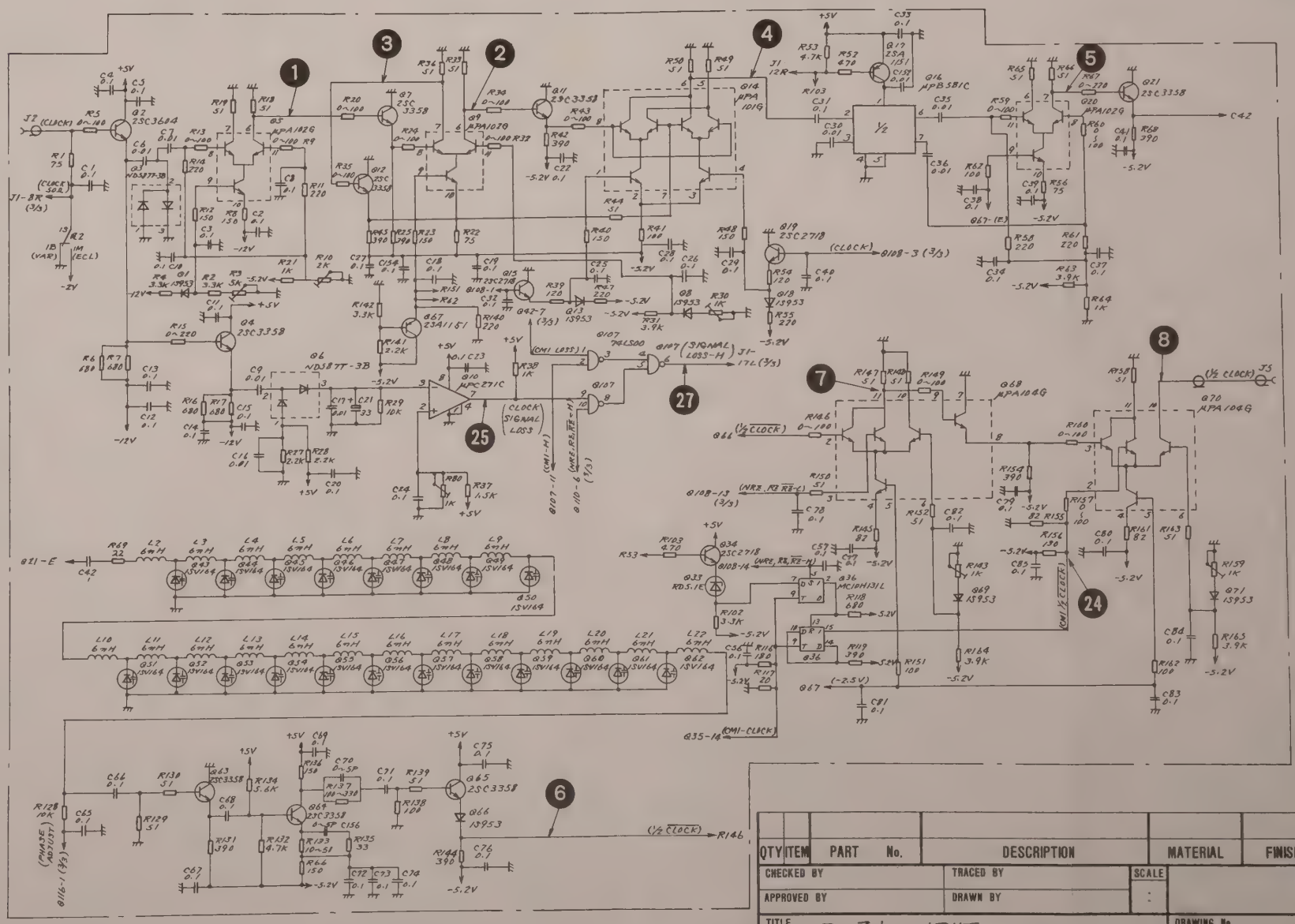
J1 (CLOCK) 50Ω
J2 (CLOCK) 50Ω
J5 (½ CLOCK)
J1 (DATA) 50Ω
(3/3)
IB (VAR)
IM (ECL)
-2V
+5V
-12V
-5.2V
Q1 UPA1826
Q2 2SC3604
Q3 UPA1826
Q4 2SC3358
Q5 UPA1826
Q6 ND387T-3B
Q7 2SC3358
Q8 13953
Q9 UPA1030
Q10 UPC271C
Q11 2SC3358
Q12 2SC3358
Q13 13953
Q14 UPA1016
Q15 2SC2718
Q16 MPB581C
Q17 2SA1151
Q18 13953
Q19 2SC2718
Q20 UPA1029
Q21 2SC3358
Q33 RD5.1E
Q34 2SC2718
Q36 MC10H131L
Q63 2SC3358
Q64 2SC3358
Q65 2SC3358
Q66 13953
Q67 2SA1151
Q68 UPA104G
Q69 13953
Q70 UPA104G
Q71 13953
0107 74LS00
0108-1 (3/3)
0108-3 (3/3)
0108-6 (3/3)
0108-13 (3/3)
0108-14
0107 (SIGNAL LOSS-H)
0107-11 (CMI-H)
0110-6 (NRZ, RS, RS-H)
0116-1 (3/3)
0116-6 (3/3)
0107-7 (3/3)
0107-10 (3/3)
0108-1 (3/3)
0108-7 (3/3)
0108-10 (3/3)
0108-11 (3/3)
0108-12 (3/3)
0108-15 (3/3)
0108-16 (3/3)
0108-17L (3/3)
0108-18 (3/3)
0108-19 (3/3)
0108-20 (3/3)
0108-21 (3/3)
0108-22 (3/3)
0108-23 (3/3)
0108-24 (3/3)
0108-25 (3/3)
0108-26 (3/3)
0108-27 (3/3)
0108-28 (3/3)
0108-29 (3/3)
0108-30 (3/3)
0108-31 (3/3)
0108-32 (3/3)
0108-33 (3/3)
0108-34 (3/3)
0108-35 (3/3)
0108-36 (3/3)
0108-37 (3/3)

APPLICATION

REVISIONS

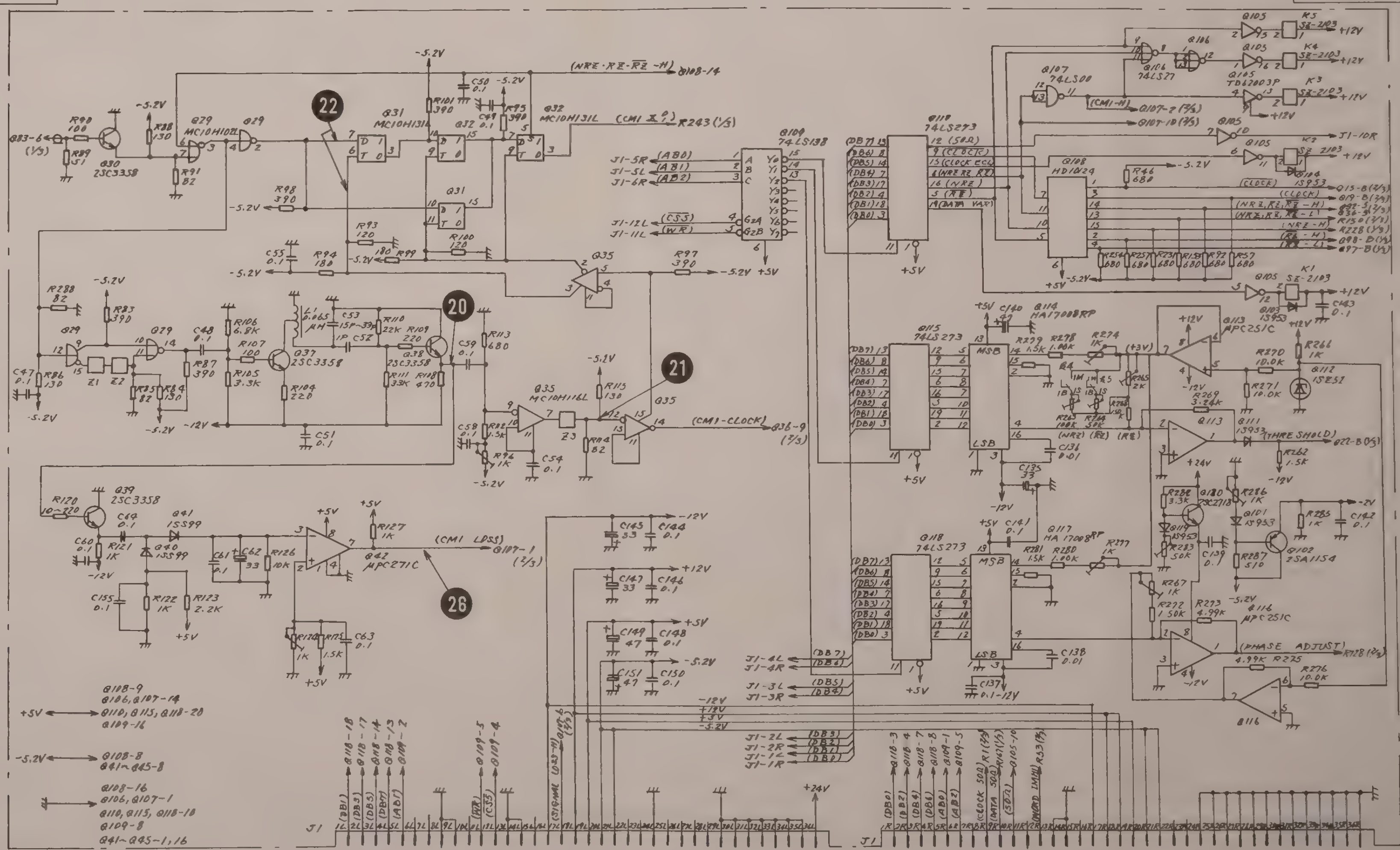

QTY	ITEM	PART No.	DESCRIPTION	MATERIAL	FINISH
CHECKED BY		TRACED BY		SCALE	
APPROVED BY		DRAWN BY			

TITLE: R-Z1 INPUT Circuit Diagram

DRAWING No. 43W33423 3/3

31

DEP

No. 0023-1985.08

ANRITSU CORP.

3.6.4 R-Z4 ERROR DETECTOR 32 , R-Z5 COUNTER 33 PC boards

(1) Circuit description

Figure 3-111 shows the block diagram of R-Z4 and R-Z5 PC boards.

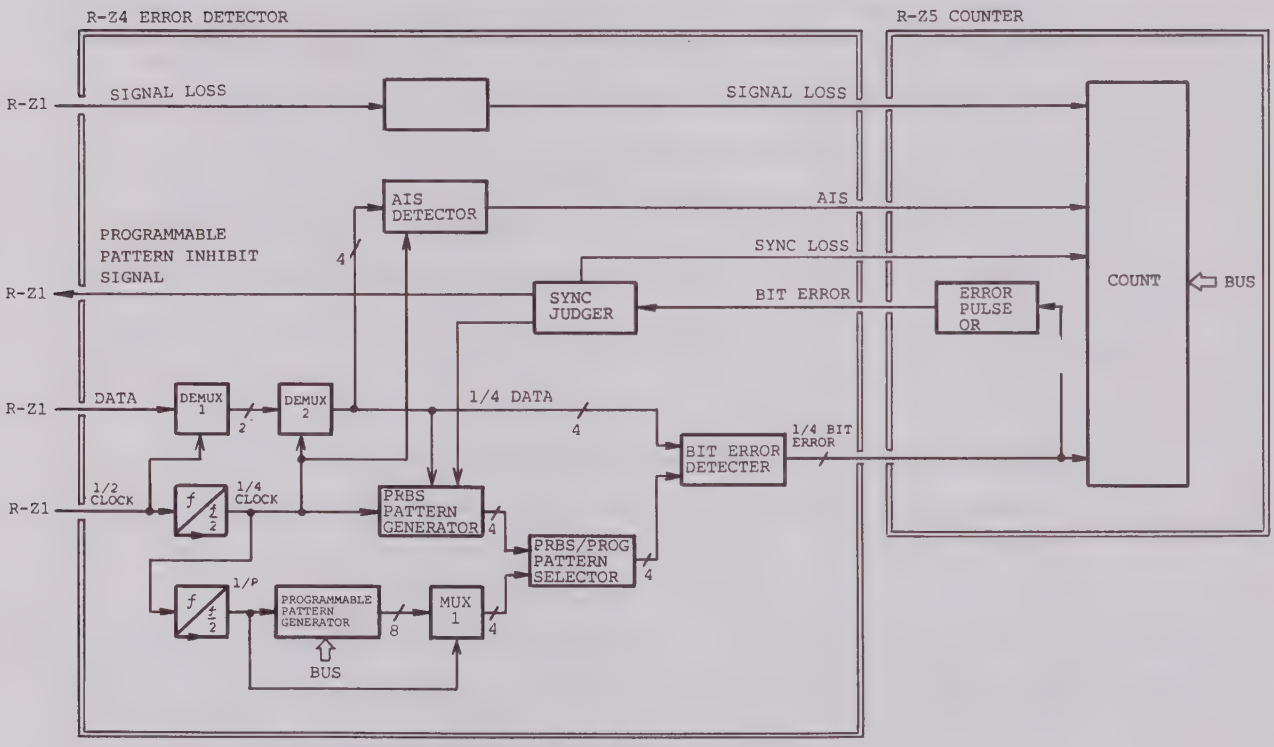

Fig. 3-111 R-Z4 ERROR DETECTOR and R-Z5 COUNTER Block Diagram

Input data to R-Z4 (ERROR DETECTOR) is input at first to DEMUX 1. This DEMUX 1 halves the data bit rate and converts the data to two streams data of 1/2 data bit rate.

Next, the two streams data of 1/2 data bit rate is input to DEMUX 2.

This DEMUX 2 halves the data bit rate again and converts the data to four steams data of 1/4 data bit rate. The 1/2 divided clock signal input to R-Z4 is converted to a 1/4 divided clock signal and branched to two signal routes by the 1/2 DIVIDER. The signal of one route is input to PRBS PATTERN GENERATOR. This circuit generates a PRBS pattern the same as the transmitter output pattern and outputs four streams reference data of 1/4 data bit rate. The signal bit rate of the other route is halved and converted to a 1/8 divided clock signal and input to PROGRAMMABLE PATTERN GENERATOR by the 1/2 DIVIDER. PROGRAMMABLE PATTERN GENERATOR generates the same programmable pattern as the transmitter output pattern and outputs eight streams reference data of 1/8 data bit rate. The output reference data is input to MUX1. MUX1 doubles the data bit rate and converts the data to four streams reference data of 1/4 data bit rate. BIT ERROR DETECTOR compares the four streams input data with the reference data of 1/4 data bit rate and detects the errors. The detected four streams error pulses of 1/4 data bit rate are input to R-Z5 (COUNTER) and branched to two signal routes. The signal of one route is input to the COUNTER. The signal of the other route is input to ERROR PULSE OR. The ORed error pulse from R-Z5 is input to R-Z4 (SYNC JUDGER).

When pattern synchronization is established and the error rate exceeds the SYNC LOSS threshold value shown in Table 3-28, this SYNC JUDGER circuit judges if synchronization is lost. When pattern synchronization is not gained and the error rate is less than the SYNC GAIN threshold value shown in Table 3-38, SYNC GAIN is judged.

Table 3-28 SYNC Threshold

		Error rate	
		SYNC LOSS threshold	SYNC GAIN threshold
PRBS PATTERN (2^7-1, 2^{10}-1, 2^{15}-1, 2^{23}-1)		$\frac{1.5 \times 10^5}{1.2 \times 10^6} = 1.3 \times 10^{-1}$	$\frac{16}{2000} = 8 \times 10^{-3}$
PROGRAMMABLE WORD PATTERN	A, B, C (8 to 200 bit) 1/N (N = 1 to 64)	$\frac{5100}{1.2 \times 10^6} = 4.2 \times 10^{-3}$	$\frac{16}{4700} = 3.4 \times 10^{-3}$
	A, B, C (208 to 2048 bit)	$\frac{510}{1.2 \times 10^6} = 4.2 \times 10^{-4}$	$\frac{16}{6 \times 10^4} = 2.6 \times 10^{-3}$

Note: $\frac{1.5 \times 10^5}{1.2 \times 10^6}$ ← Number of errors / Number of clocks

Fig. 3-112 shows the PRBS 2^{15}-1 pattern block diagram.

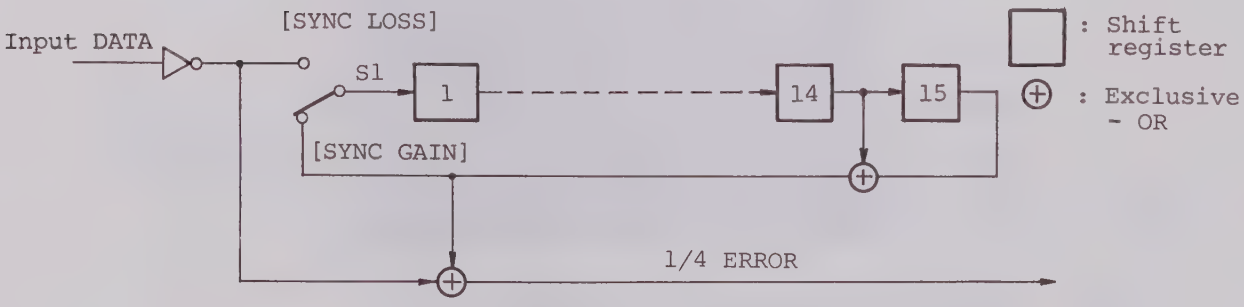

Fig. 3-112 PRBS 2^{15}-1 Pattern Block Diagram

For PRBS pattern, when SYNC LOSS is judged, S1 is set to the [SYNC LOSS] side, the loop is opened, and the input data is read to the shift register.

Approximately 200 μs later, S1 returns to the [SYNC GAIN] side automatically, and the loop is closed. Next, the input data is compared with the reference data and if the error rate is less than the SYNC GAIN threshold value, synchronization is gained.

If the error rate exceeds the SYNC GAIN threshold value, S1 is set to the [SYNC LOSS] side again and the operation described above is repeated.

For PROGRAMMABLE WORD pattern, when SYNC LOSS is judged, the 1/2 DIVIDER of R-Z1 (INPUT) clock is reset, the clock for reference data generation is inhibited and, at the same time, the input data is compared with the reference data. If the error rate is less than the SYNC GAIN threshold value, synchronization is gained. If the error rate exceeds the SYNC GAIN threshold value, the 1/2 DIVIDER is reset again and the operation described above is repeated.

When the number of "0" in the data is 4 bits or less in 3200 clocks, AIS DETECTOR judges AIS. STRETCHER extends the SIGNAL LOSS RECOVERY signal by approximately 0.8 seconds. This is done because the time from recovery of input to regaining of synchronization is taken into account.

(2) Troubleshooting and adjustment

(a) R-Z4 PC board

After lifting the R-Z4 PC board using the extender board, perform troubleshooting and adjustment.

(i) Step 1

Panel setting:

	ME522A (T)	ME522A (R)
FREQUENCY	700 MHz/139.264 MHz	——
PATTERN	PRBS $2^{23}-1$	
FORMAT	NRZ/RZ/$\overline{\text{RZ}}$/CMI	

Check the TP ❶ and ❷ signal waveforms using a sampling oscilloscope by changing the frequency and format.

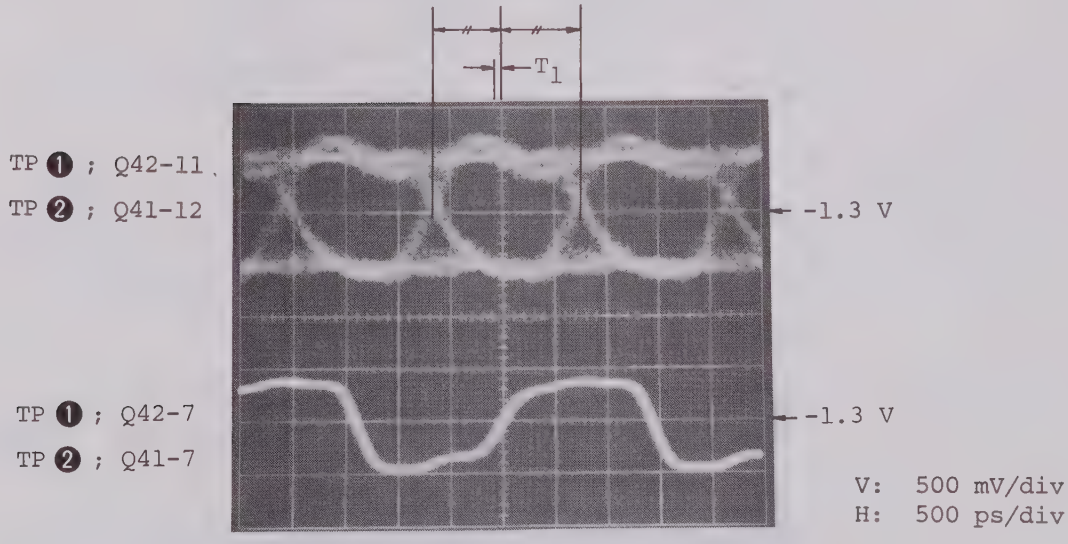

(a) FREQUENCY; 700 MHz
FORMAT; NRZ/RZ/$\overline{\text{RZ}}$

Fig. 3-113 TP ❶ and ❷ Waveforms of R-Z4

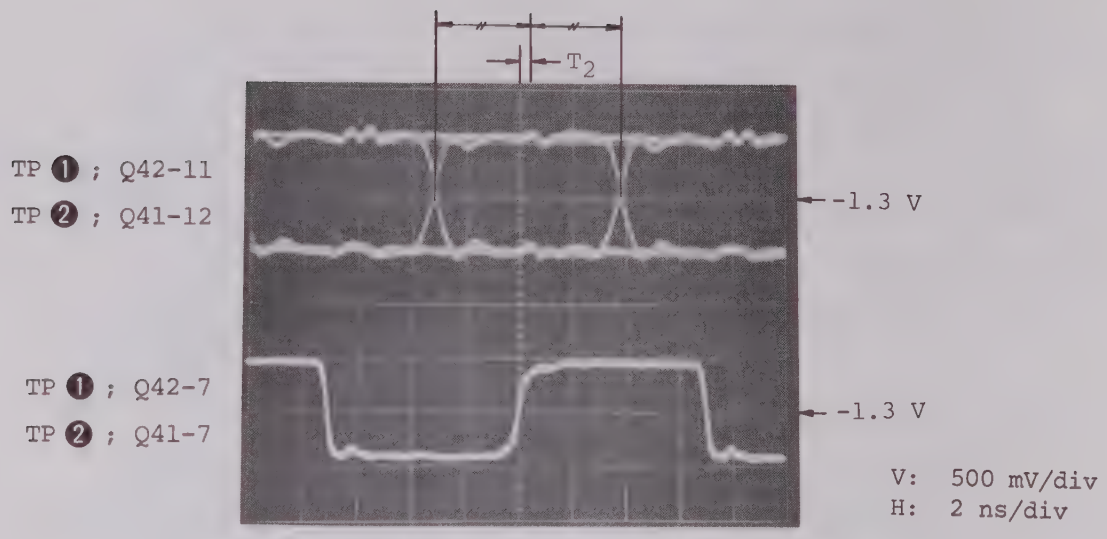

(b) FREQUENCY; 139.264 MHz
FORMAT; CMI

Fig. 3-113 TP ❶ and ❷ Waveforms of R-Z4 (Continued)

If the above waveforms are OK, proceed to the next step without performing the following test. If not OK, perform the following test.

. Check

1. Check that the phase difference of T_1 is approx. ±100 ps. If not, adjust the phase adjust of the ME522A (R).
2. Check that the phase difference of T_2 is approx. ±1 ns.

If not OK after performing the above test, perform the following adjustment.

. Adjustment

1. Adjust R94 for approx. 50% duty by observing the Q40-13 pin and Q40-14 pin waveforms using a sampling oscilloscope.

2. Adjust R159 for approx. 100% duty by observing the Q60-13 pin and Q60-14 pin waveforms using a sampling oscilloscope.

If not OK after performing the above adjustment, troubleshoot the circuit(s) near the faulty test point.

(ii) Step 2

Panel setting:

	ME522A (T)	ME522A (R)
FREQUENCY	700 MHz	——
PATTERN	PRBS 2^{23}-1/PROG WORD A	
FORMAT	NRZ	

Check the TP ❸, ❹, ❺, ❻, and ❼ signal waveforms using a sampling oscilloscope by changing the pattern.

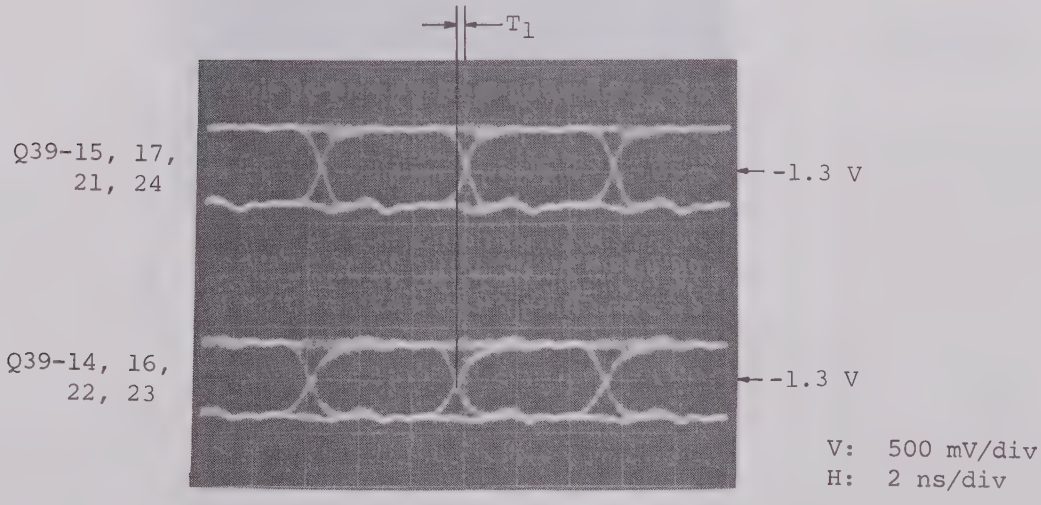

(a)

Fig. 3-114 TP ❸ Waveform of R-Z4

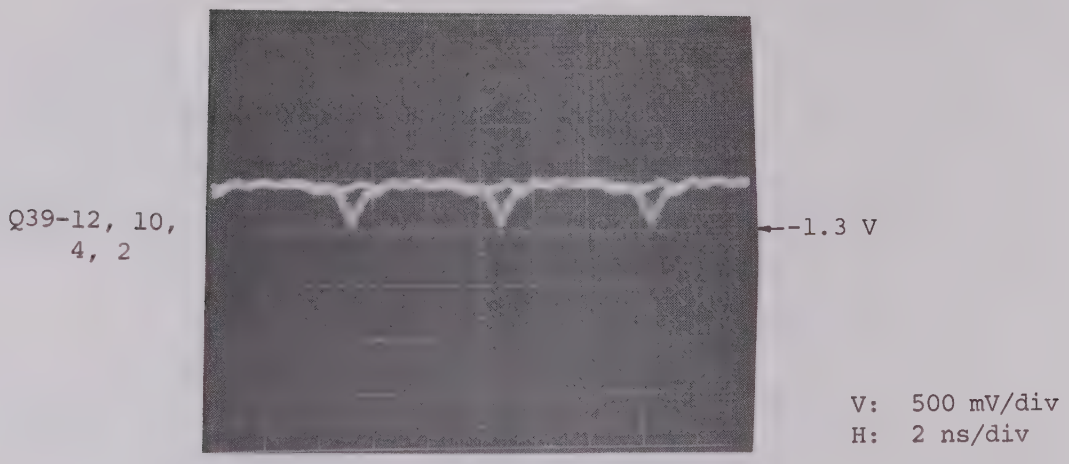

Fig. 3-114 TP ❸ Waveform of R-Z4 (Continued)

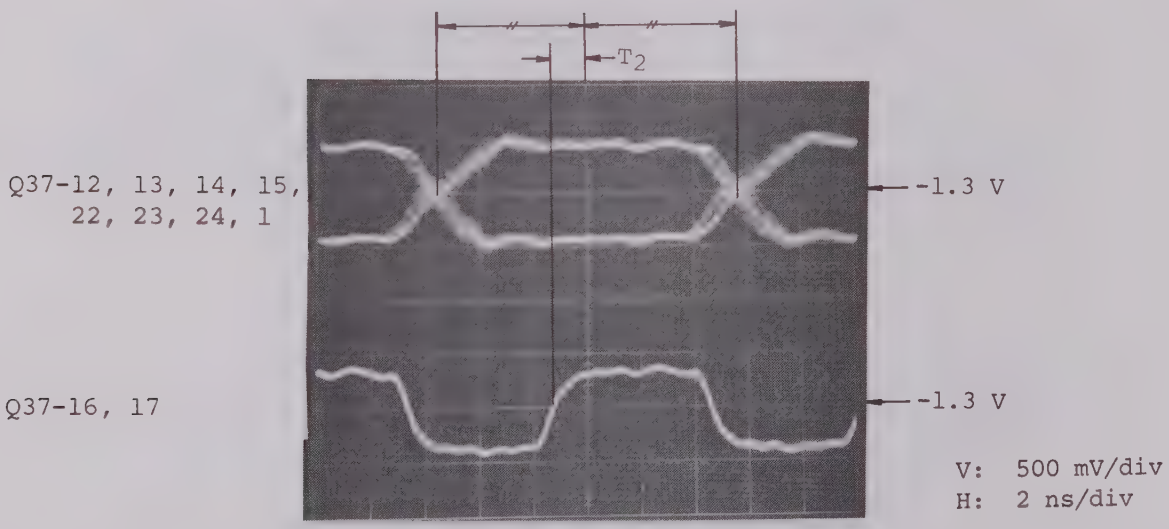

Fig. 3-115 TP ❹ Waveforms of R-Z4

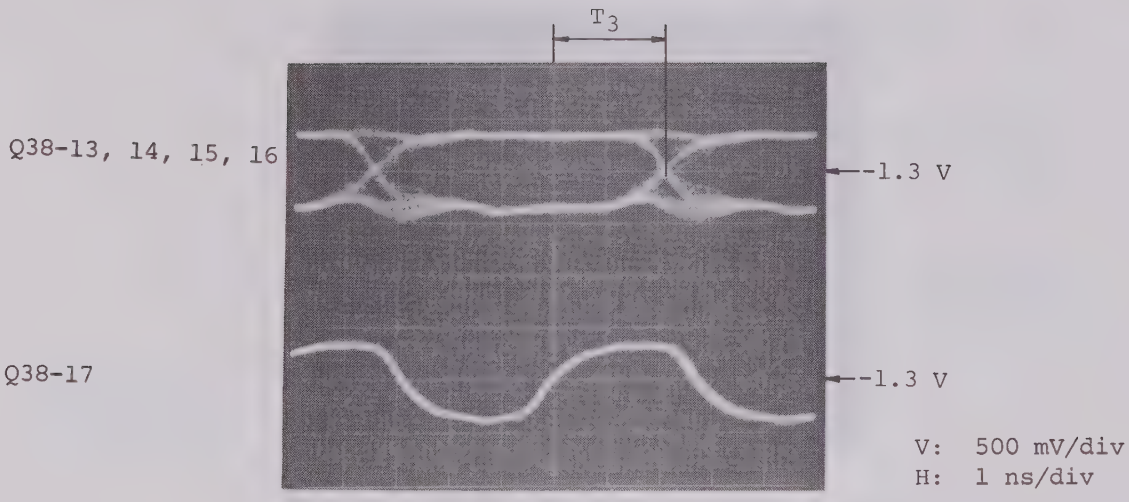

Fig. 3-116 TP ❺ Waveforms of R-Z4

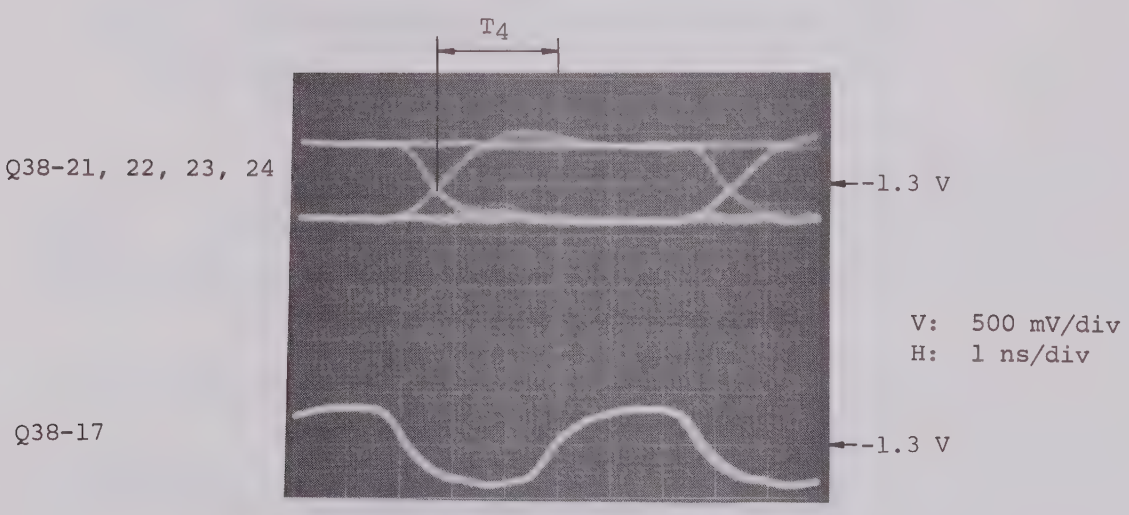

Fig. 3-117 TP ❻ Waveforms of R-Z4

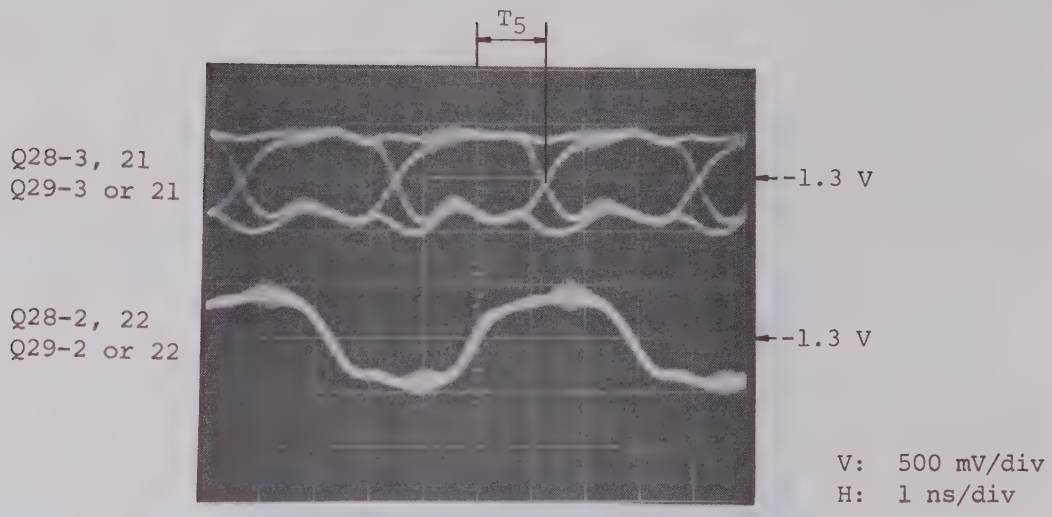

Fig. 3-118 TP ❼ Waveforms of R-Z4

If the above waveforms are OK, proceed to the next step without performing the following test. If not OK, perform the following test.

. Check and Adjustment

1. Check whether the phase difference of T_1 (Fig. 3-114 (a)) is approx. 100 ps. If not, adjust the Z11 Delay Line parts or W1 cable length.

2. Check whether the phase difference of T_2 (Fig. 3-115) is approx. 1.4 ns.

   If not, adjust the Z3, Z4 Delay Line parts or W2 cable length.

3. Check whether the phase difference of T_3 (Fig. 3-116) is approx. 0.5 ns to 1.0 ns.

   If not, adjust the W_3 cable length.

4. Check whether the phase difference of T_4 (Fig. 3-117) is approx. 1.5 ns to 2.5 ns.

   If not, adjust the W_4 cable length.

5. Check whether the phase difference of T_5 (Fig. 3-118) is approx. 1.0 ns to 1.3 ns.

   If not, adjust the Z5, Z6 Delay Line parts or W_5 cable length and the Z8 Delay Line parts or W_6 cable length.

If not OK after performing the above test, troubleshoot the circuit(s) near the faulty test point.

(iii) Step 3

Panel setting:

	ME522A (T)	ME522A (R)
FREQUENCY	700 MHz	——
PATTERN	PRBS 2^{23}-1/ 1/1	

Check the TP ❽ and ❾ signal waveforms using a sampling oscilloscope and the TP ❿ status in accordance with Table 3-29 by changing the pattern.

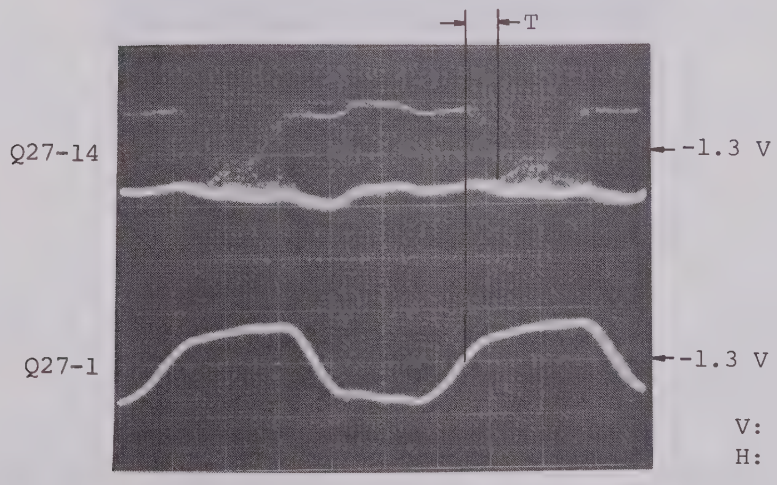

Fig. 3-119 TP ❽ Waveforms of R-Z4

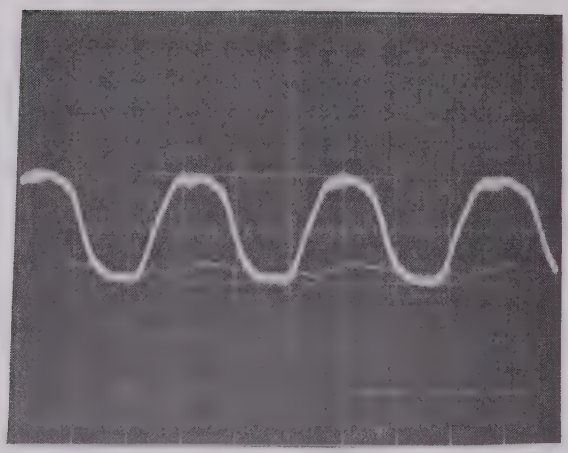

V: 500 mV/div
H: 2 ns/div

PATTERN; PRBS $2^{23}-1$

Fig. 3-120 TP ⑨ Waveforms of R-Z4

Table 3-29 TP ⑩ Status

PATTERN	Status (TTL level)
	TP ⑩
PRBS $2^{23}-1$	H
1/1	L

If the TP ⑧ and ⑨ waveforms and the TP ⑩ status are OK, proceed to the next step without performing the following test. If not OK, perform the following test.

. Check and Adjustment

Check that the phase difference of T (Fig. 3-119) is approx. 0.5 ns to 1.2 ns. If not, adjust the Z7 Delay Line part.

If not OK after performing the above test, troubleshoot the circuit(s) near the faulty test point.

(iv) Step 4

Panel setting:

	ME522A (T)	ME522A (R)
FREQUENCY	700 MHz	——
ERROR ADDITION	2×10^{-3}	——
PATTERN	PRBS $2^{23}-1$	
AUTO SYNC	——	ON

Check the TP ⓫ , ⓬ , and ⓭ signal waveforms using a oscilloscope and whether the TP ⓮ status is TTL high level.

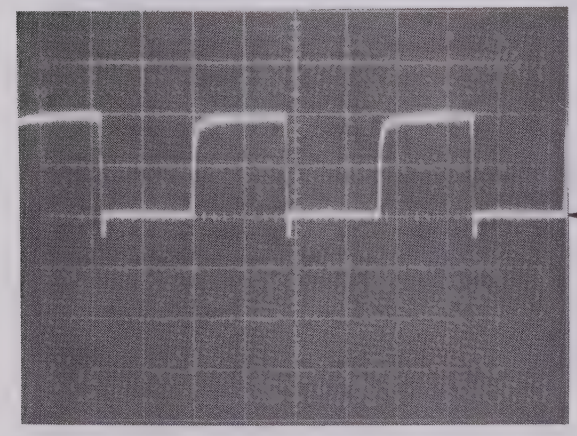

V: 2 V/div
H: 200 ns/div

Fig. 3-121 TP ⓫ Waveform of R-Z4

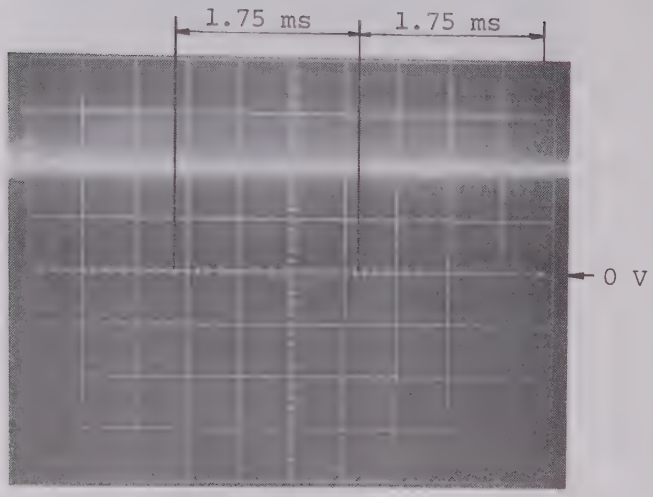

Fig. 3-122 TP ⑫ Waveform of R-Z4

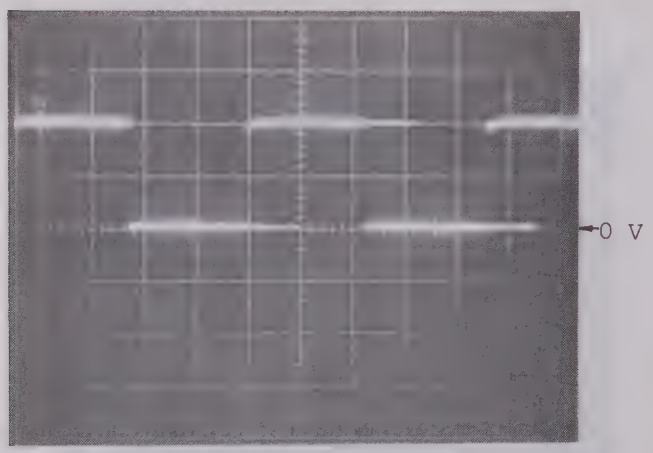

Fig. 3-123 TP ⑬ Waveform of R-Z4

If the TP ⑪ , ⑫ , and ⑬ waveforms and the TP ⑭ status are OK, Z4 is OK. If not OK, troubleshoot the circuit(s) near the faulty test point.

(b) R-Z5 PC board

After lifting the R-Z5 PC board using the extender board, perform troubleshooting and adjustment.

Panel setting:

	ME522A (T)	ME522A (R)
FREQUENCY	700 MHz	——
PATTERN	PRBS 2^{15}-1	PRBS 2^{23}-1

Make the ME522A (T) and the ME522A (R) patterns differ from each other and set them under the sync loss condition.

Check the TP ❶ , ❷ , ❸ , ❹ , and ❺ signal waveforms using a sampling oscilloscope.

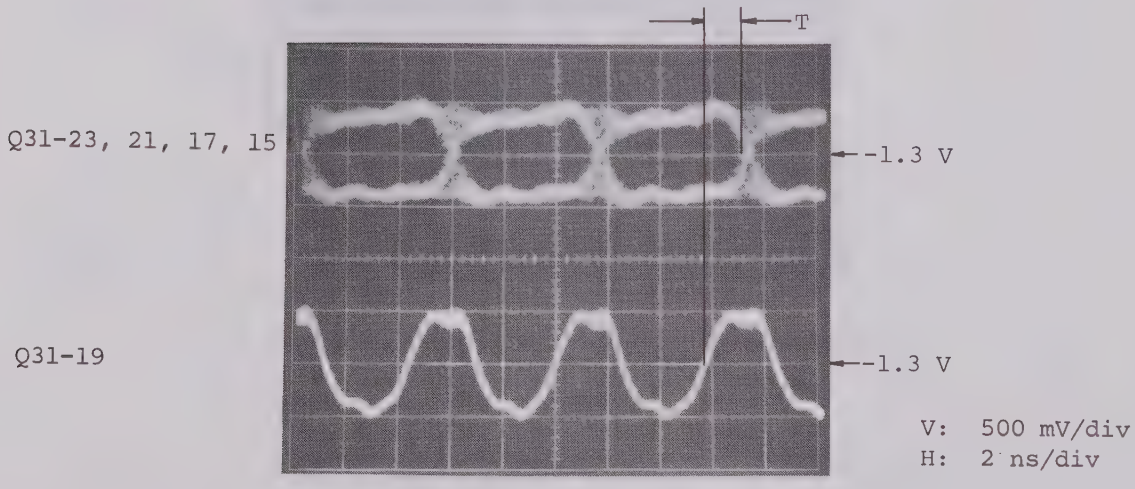

Fig. 3-124 TP ❶ Waveforms of R-Z5

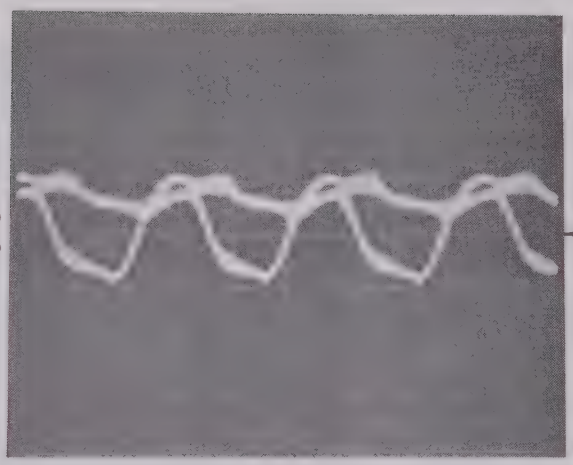

Fig. 3-125 TP ❷ Waveform of R-Z5

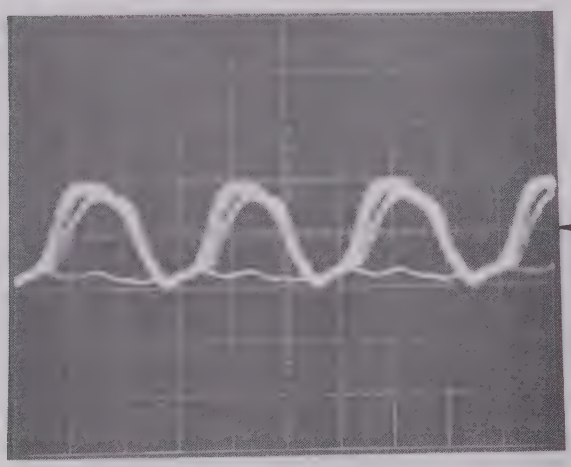

Fig. 3-126 TP ❸ Waveform of R-Z5

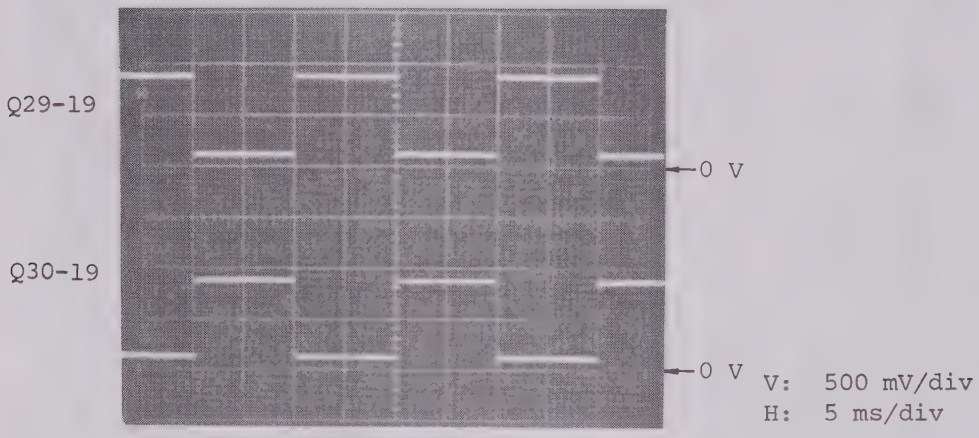

Fig. 3-127 TP ❹ Waveform of R-Z5

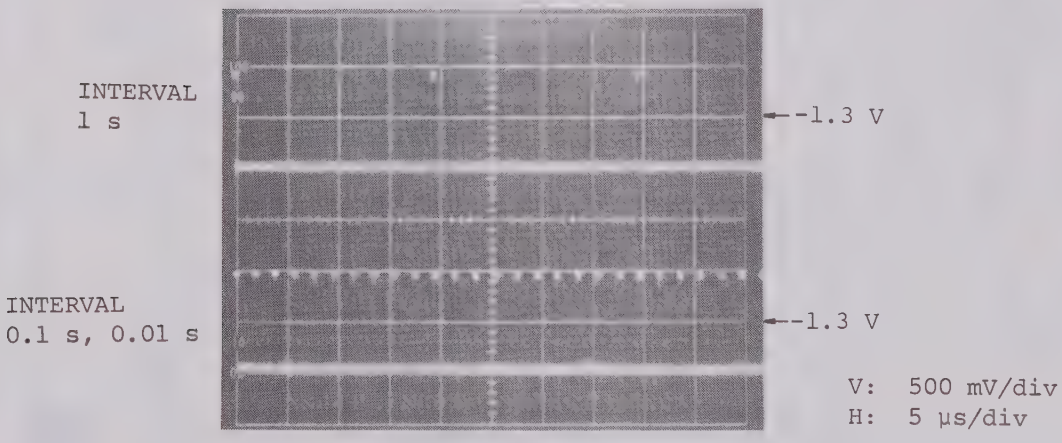

Fig. 3-128 TP ❺ Waveform of R-Z5

If the above waveforms are OK, Z5 is OK. If not OK, perform the following test.

. Check and adjustment

Check that the phase difference of T (Fig. 3-124) is approx. 0.5 ns to 1.0 ns.
If not, adjust Z1 or Z2 delay line part.

If not OK after performing the above test, troubleshoot the circuit(s) near the faulty test point.

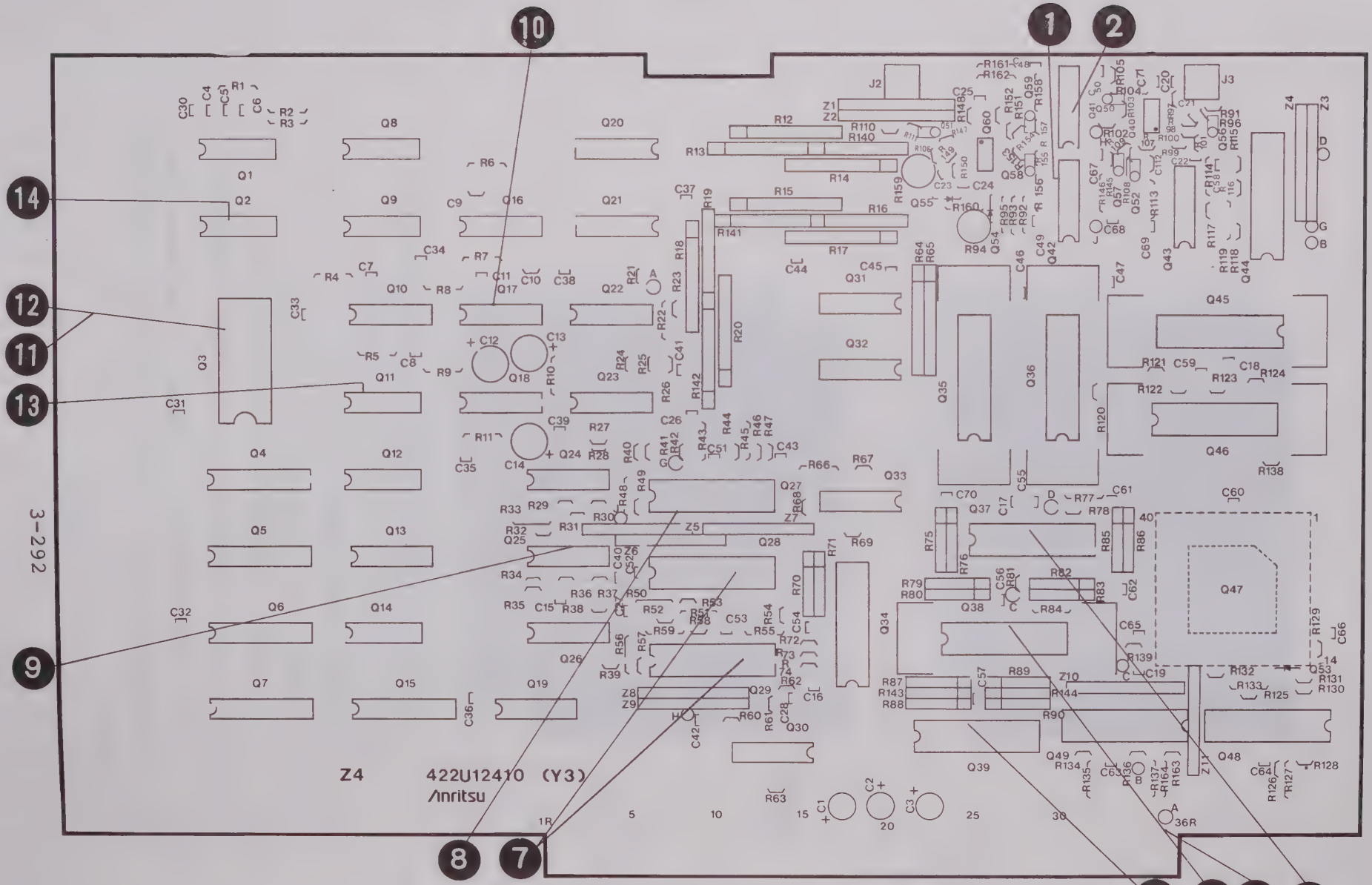

Fig. 3-129 R-Z4 ERROR DETECTOR PC Board 32 Parts Layout

APPLICATION

REVISIONS

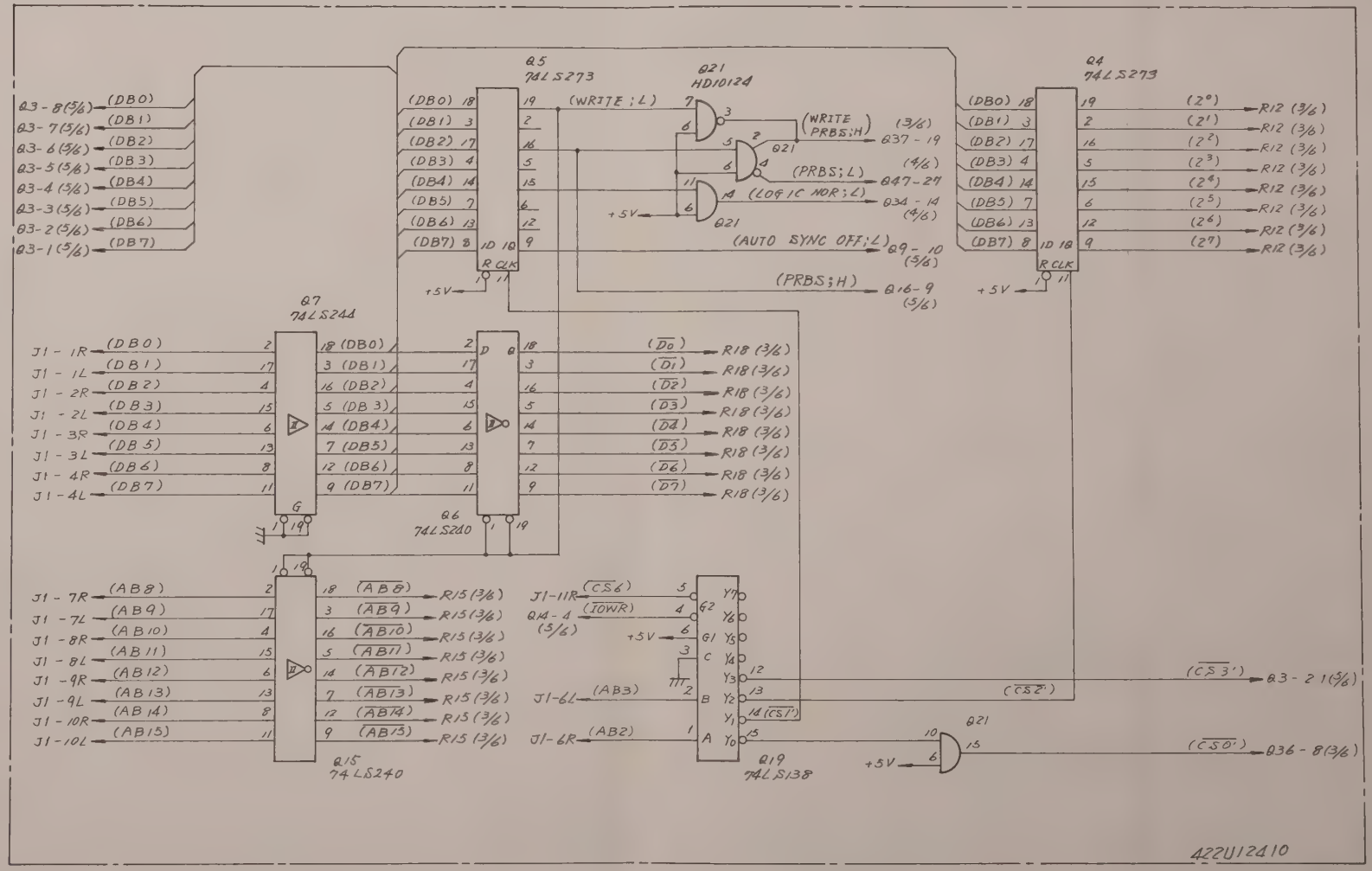

QTY	ITEM	PART No.	DESCRIPTION	MATERIAL	FINISH

32

CHECKED BY | TRACED BY | SCALE :

APPROVED BY | DRAWN BY

Parts List 44W83036

TITLE R-24 ERROR DETECTOR Circuit Diagram

DRAWING No. 43W33426 1/6

DEP

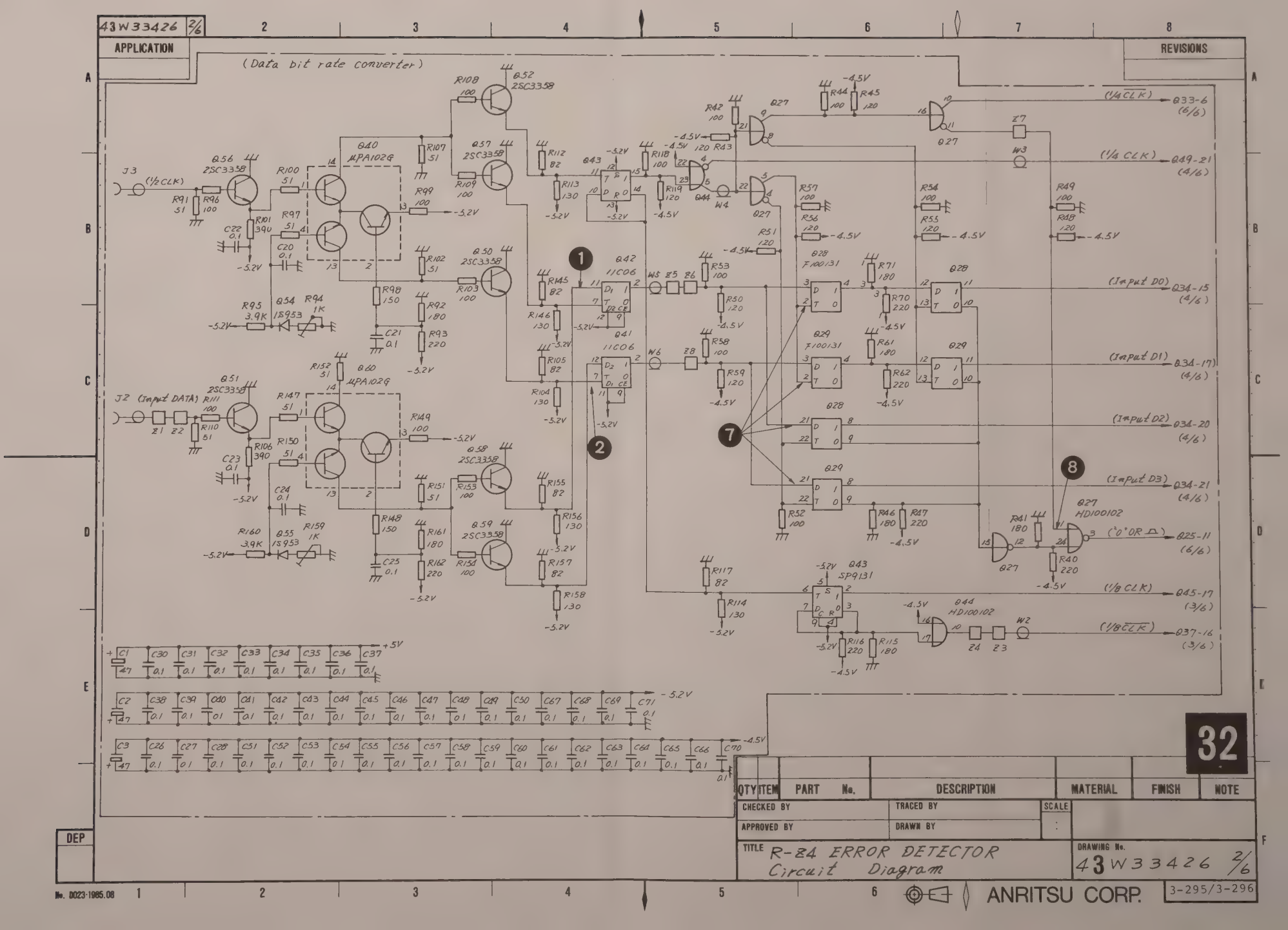
43W33426 2/6
APPLICATION
REVISIONS
(Data bit rate converter)
J3 (1/2CLK)
J2 (Input DATA)
Q40 μPA102G
Q41 11C06
Q42 11C06
Q43 SP9131
Q44 HD100102
Q27 HD100102
Q28 F100131
Q29 F100131
(1/4 CLK) Q33-6 (6/6)
(1/4 CLK) Q49-21 (4/6)
(Input D0) Q34-15 (4/6)
(Input D1) Q34-17 (4/6)
(Input D2) Q34-20 (4/6)
(Input D3) Q34-21 (4/6)
('0' OR Δ) Q25-11 (6/6)
(1/8 CLK) Q45-17 (3/6)
(1/8 CLK) Q37-16 (3/6)
+5V
-5.2V
-4.5V
DEP
QTY ITEM PART No. DESCRIPTION MATERIAL FINISH NOTE
CHECKED BY
TRACED BY
SCALE
APPROVED BY
DRAWN BY
TITLE R-84 ERROR DETECTOR Circuit Diagram
DRAWING No. 43W33426 2/6
32
No. 0023-1985.08
ANRITSU CORP.
3-295/3-296

APPLICATION

REVISIONS

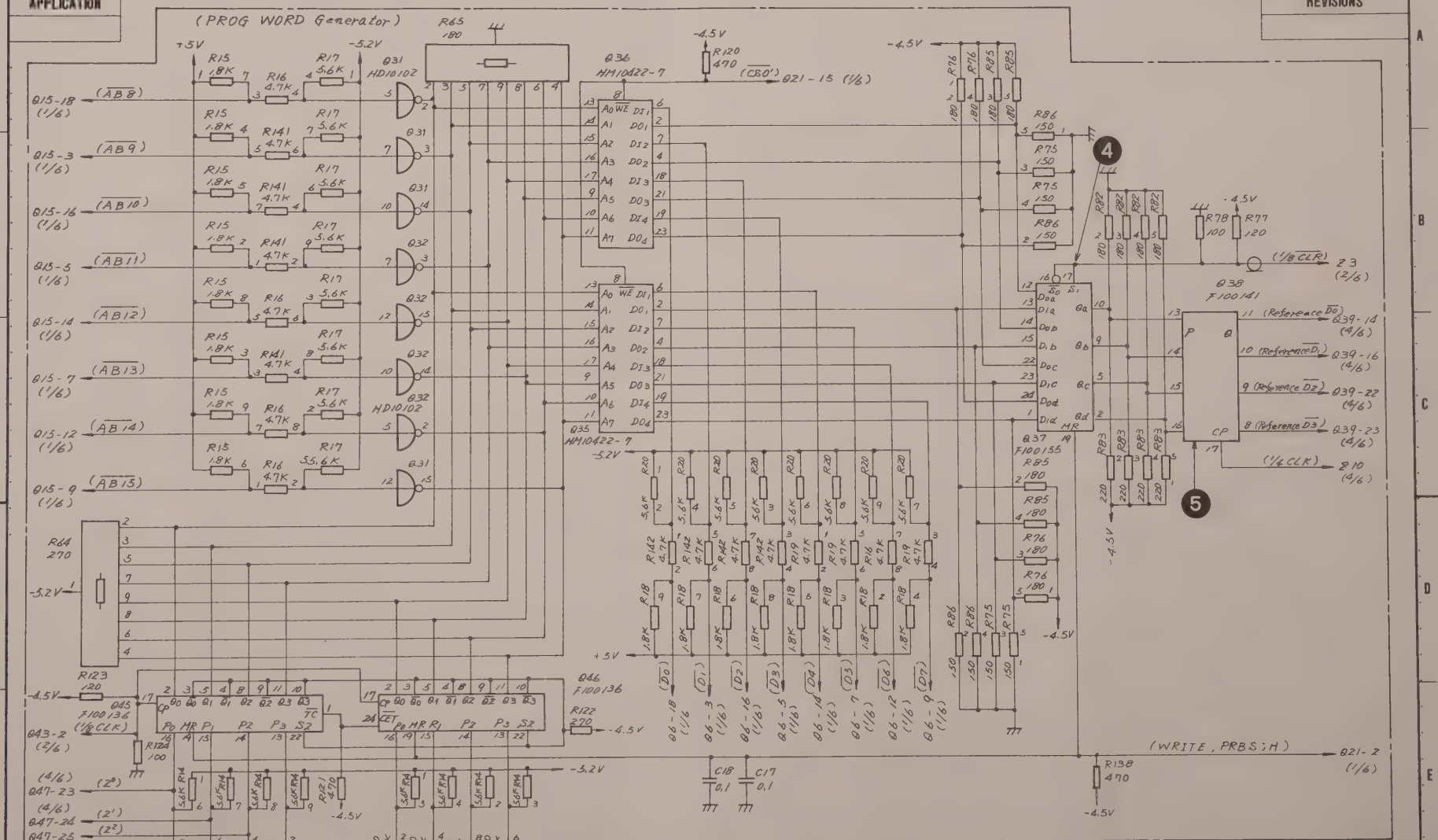

QTY	ITEM	PART No.	DESCRIPTION	MATERIAL	FINISH

CHECKED BY | TRACED BY | SCALE :

APPROVED BY | DRAWN BY

TITLE R-24 ERROR DETECTOR Circuit Diagram

DRAWING No. 43W33426 3/6

32

DEP

ANRITSU CORP.

No. 0023-1985.08

APPLICATION

REVISIONS

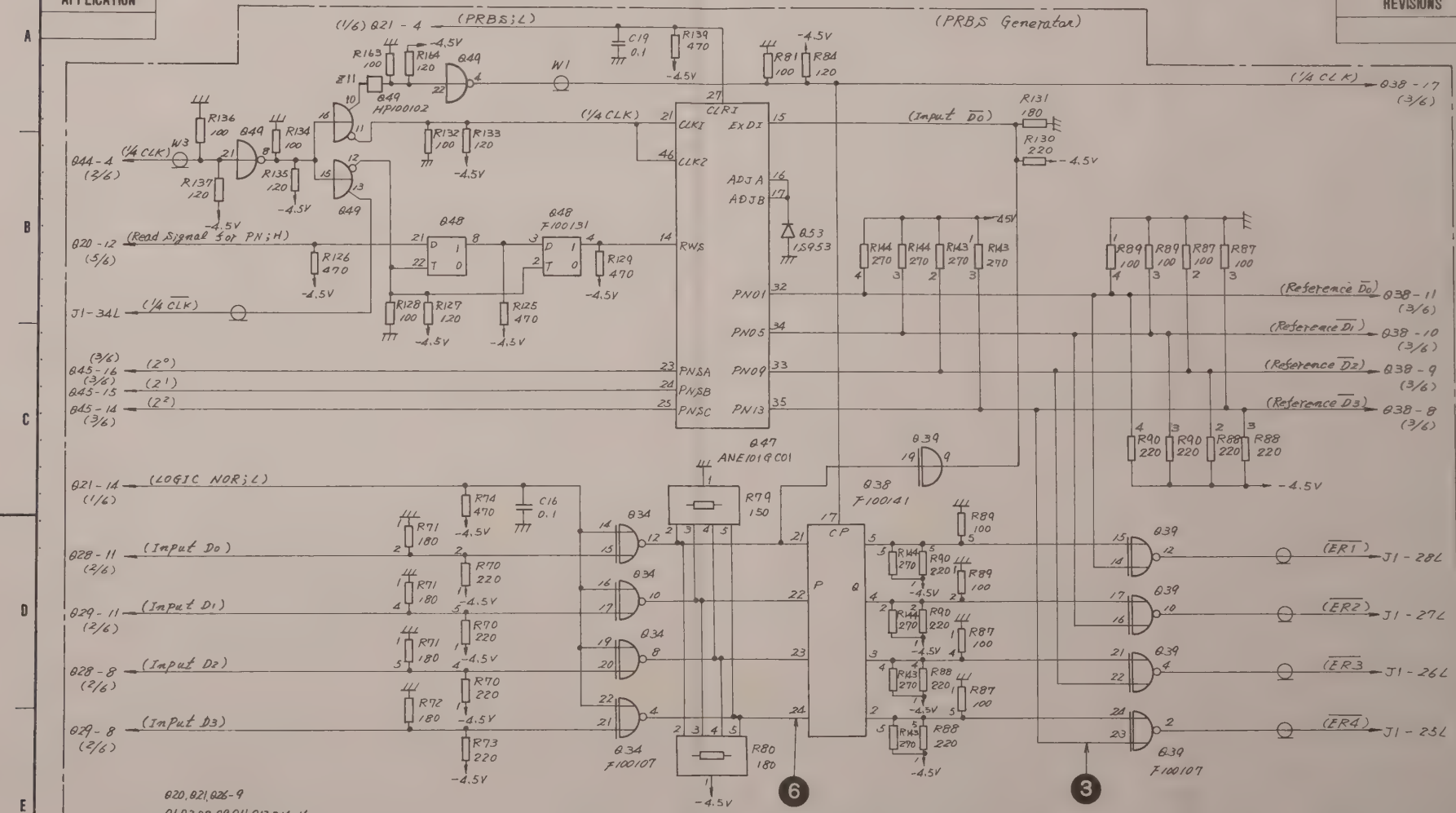

QTY	ITEM	PART No.	DESCRIPTION	MATERIAL	FINISH

CHECKED BY		TRACED BY	SCALE
APPROVED BY		DRAWN BY	

TITLE R-84 ERROR DETECTOR Circuit Detector

DRAWING No. 43W33426 4/6

32

DEP

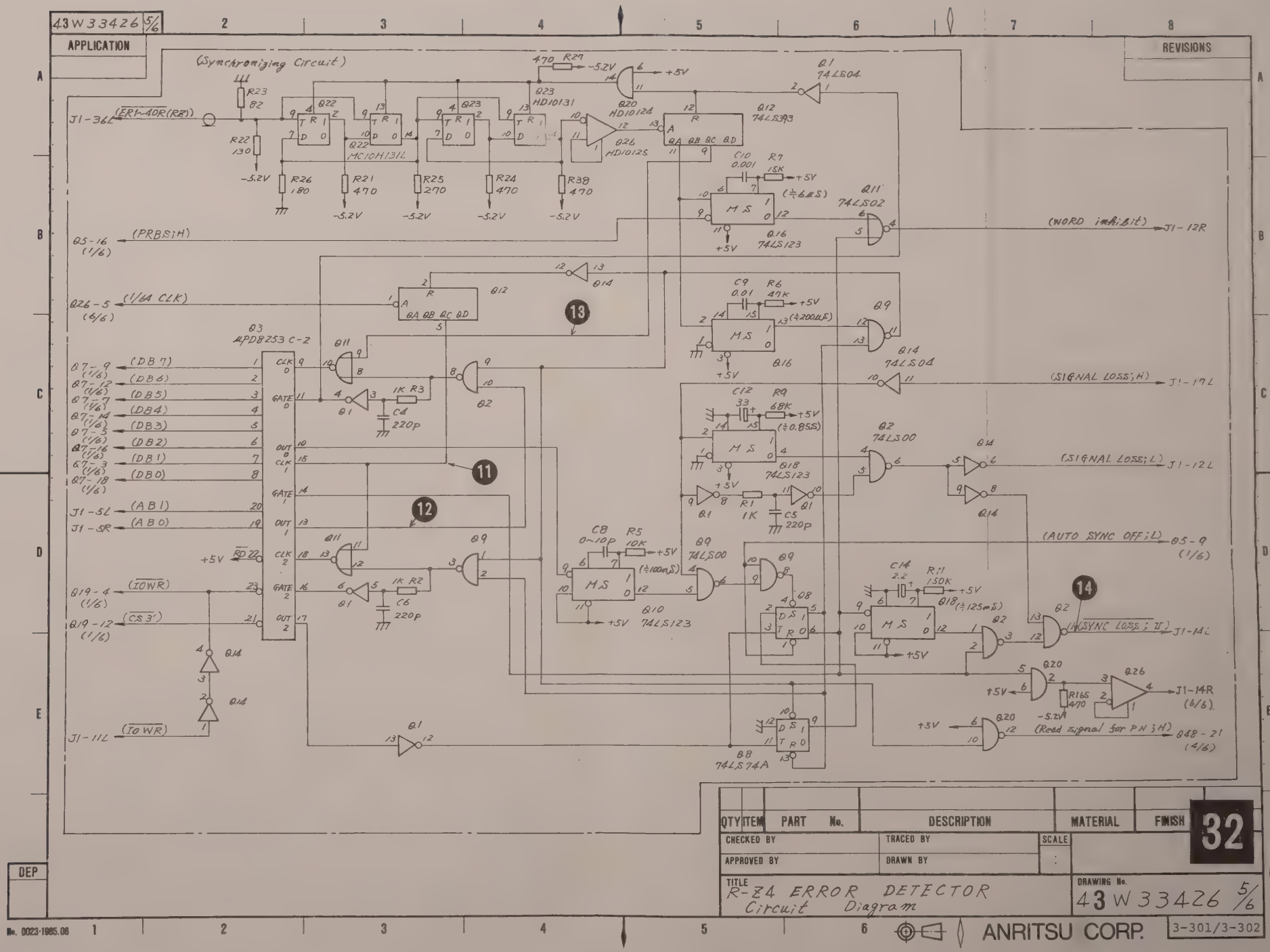
43W33426 5/6
APPLICATION
REVISIONS
(Synchronizing Circuit)
J1-36L (ER1~40R(RZ))
R23 82
R22 130
-5.2V
Q22 MC10H131L
Q23 HD10131
Q20 HD10124
Q26 HD10125
Q12 74LS393
Q1 74LS04
R27 470
R26 180
R21 470
R25 270
R24 470
R38 470
C10 0.001
R7 15K
(≒6μS)
Q16 74LS123
Q11 74LS02
(WORD inhibit) J1-12R
Q5-16 (1/6) (PRBS;H)
Q26-5 (6/6) (1/64 CLK)
Q3 μPD8253 C-2
Q7-9 (1/6) (DB7)
Q7-12 (1/6) (DB6)
Q7-7 (1/6) (DB5)
Q7-14 (1/6) (DB4)
Q7-5 (1/6) (DB3)
Q7-16 (1/6) (DB2)
Q7-3 (1/6) (DB1)
Q7-18 (1/6) (DB0)
J1-5L (AB1)
J1-5R (AB0)
Q19-4 (1/6) (IOWR)
Q19-12 (1/6) (CS3')
J1-11L (IOWR)
C9 0.01
R6 47K
(≒200μS)
Q14 74LS04
(SIGNAL LOSS;H) J1-17L
C12 33
R9 68K
(≒0.85S)
Q18 74LS123
Q2 74LS00
(SIGNAL LOSS;L) J1-12L
R1 1K
C5 220P
C8 0~10P
R5 10K
(≒100nS)
Q10 74LS123
Q9 74LS00
(AUTO SYNC OFF;L) Q5-9 (1/6)
C14 2.2
R11 150K
Q18 (≒125mS)
(SYNC LOSS;U) J1-14L
R165 470
J1-14R (6/6)
(Read signal for PN;H) Q48-21 (4/6)
Q8 74LS74A
C4 220P
C6 220P
1K R3
1K R2
13
11
12
14
QTY ITEM PART No. DESCRIPTION MATERIAL FINISH
32
CHECKED BY
TRACED BY
SCALE
APPROVED BY
DRAWN BY
TITLE R-Z4 ERROR DETECTOR Circuit Diagram
DRAWING No. 43W33426 5/6
DEP
No. 0023-1985.08
ANRITSU CORP.
3-301/3-302

APPLICATION

REVISIONS

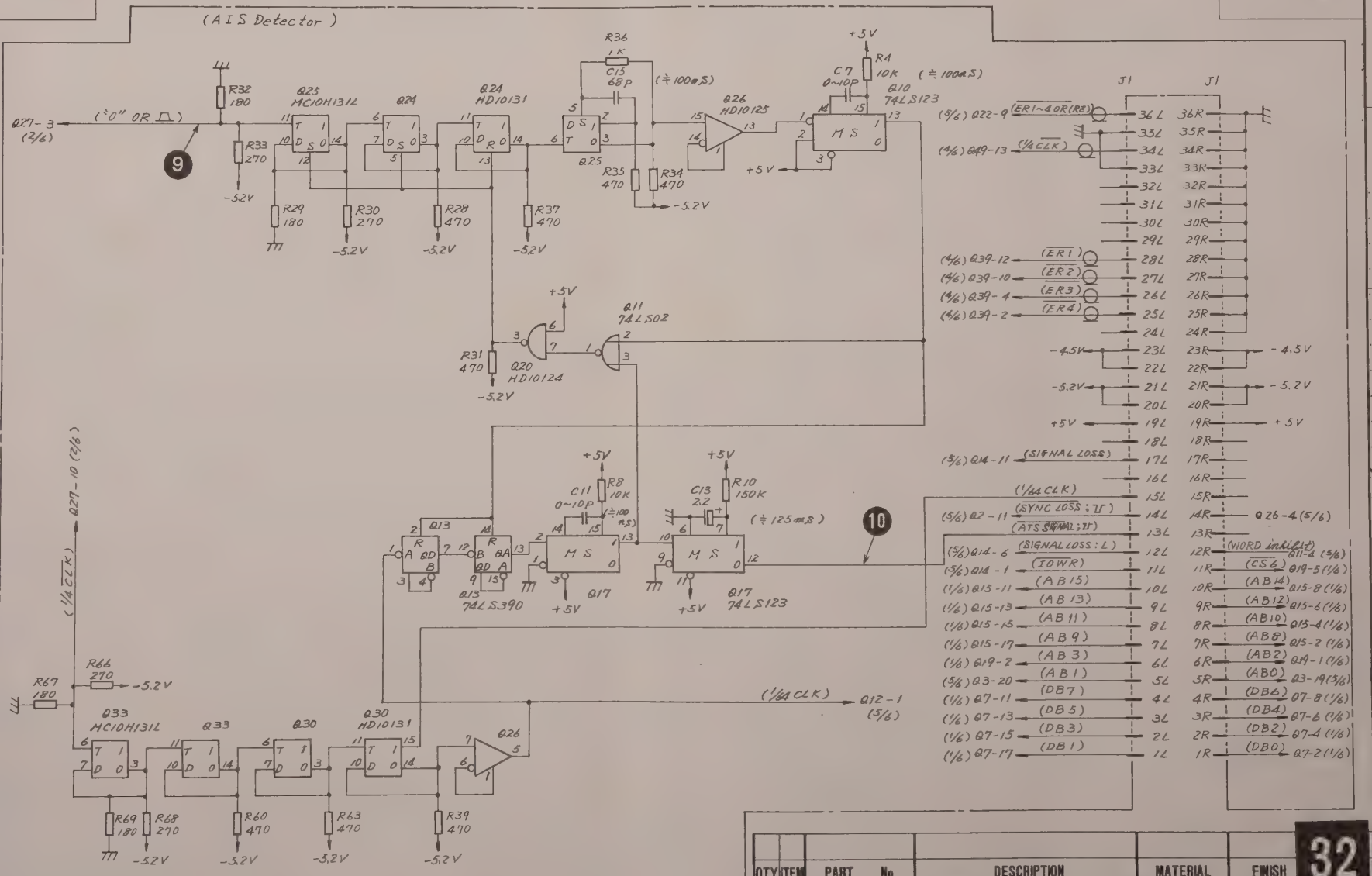

QTY	ITEM	PART No.	DESCRIPTION	MATERIAL	FINISH

32

CHECKED BY	TRACED BY	SCALE	
APPROVED BY	DRAWN BY	:	

TITLE R-24 ERROR DETECTOR Circuit Diagram

DRAWING No. 43W33426 6/6

DEP

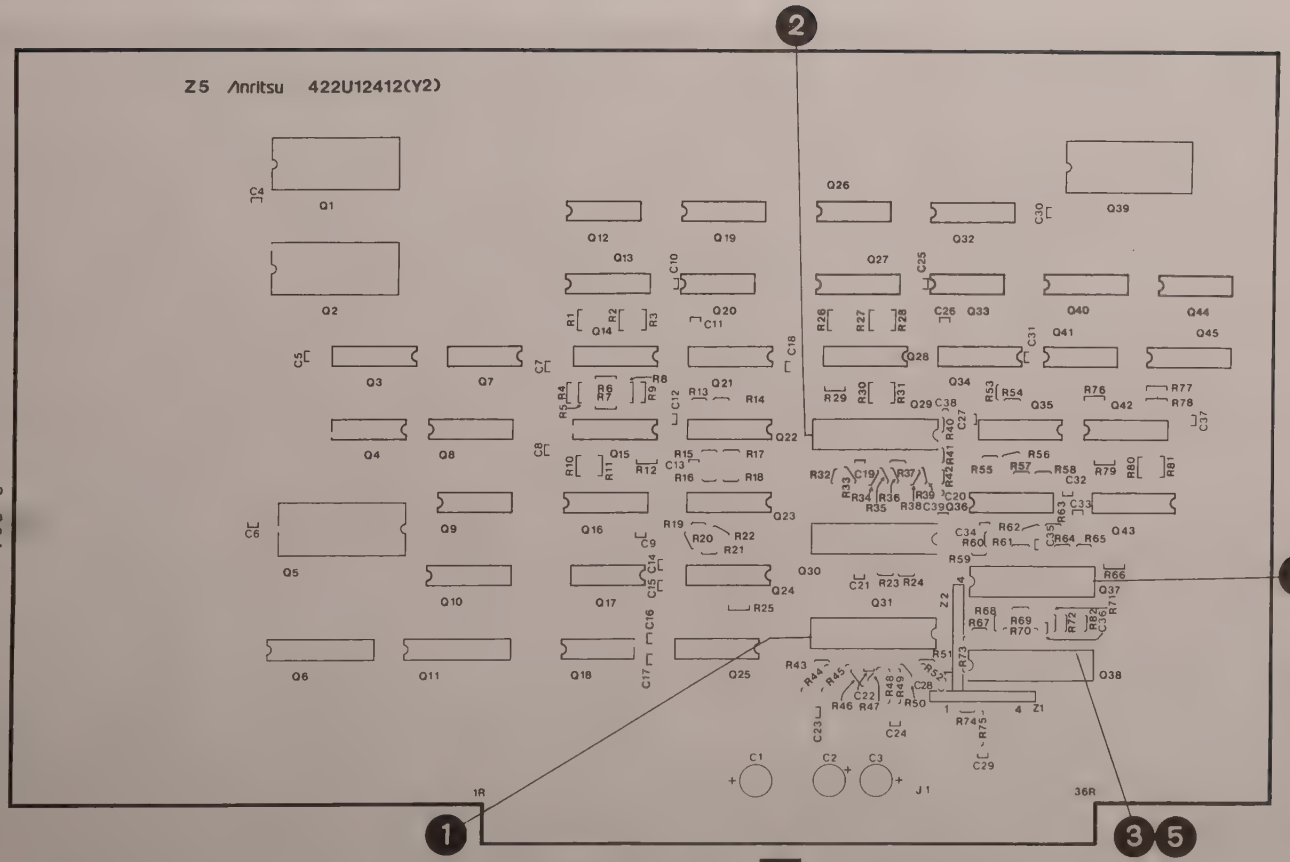

Fig. 3-130 R-Z5 COUNTER PC Board 33 Parts Layout

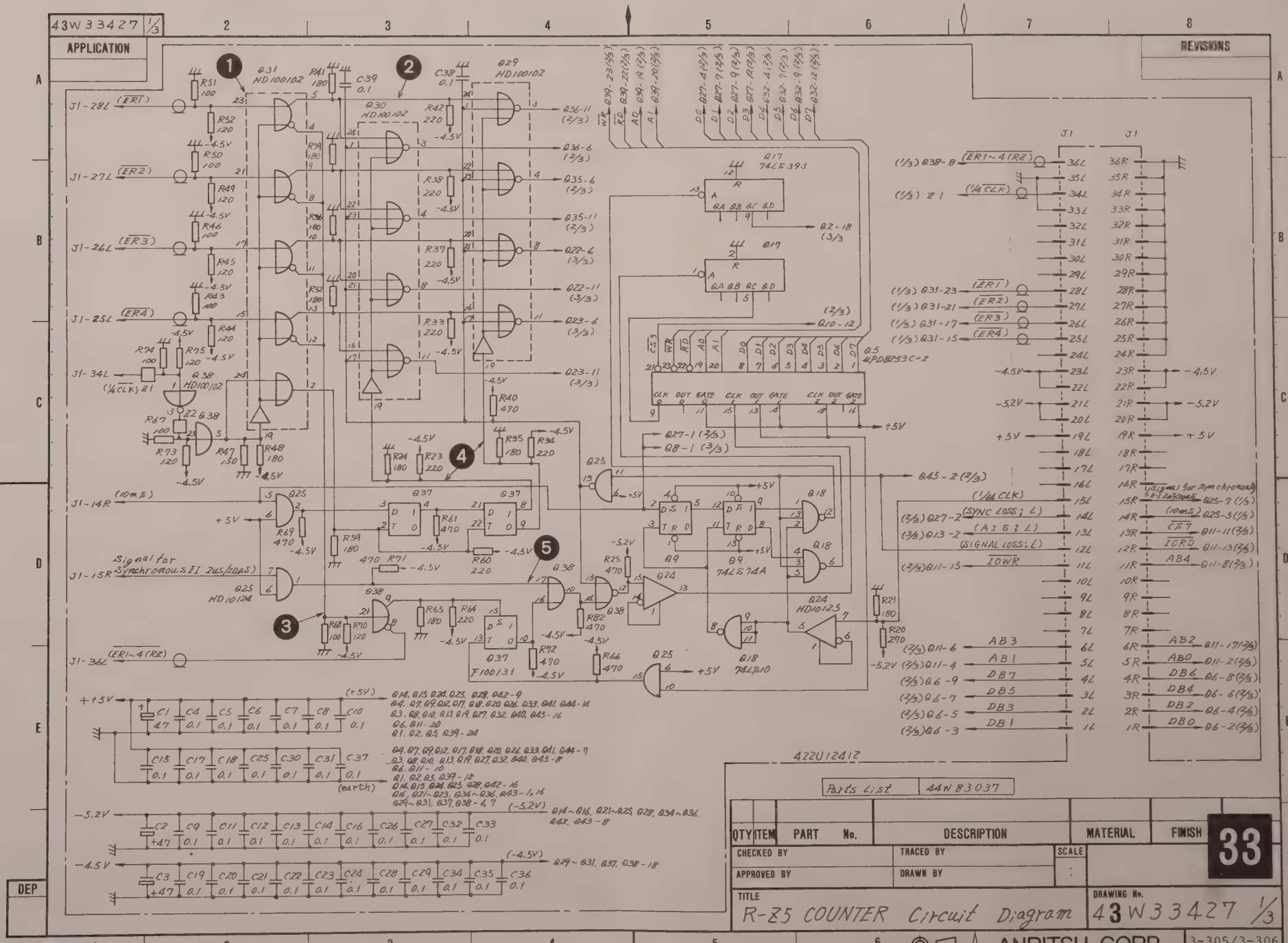
43W33427 1/3
APPLICATION
REVISIONS
DEP
Parts List 44W83037
QTY ITEM PART No. DESCRIPTION MATERIAL FINISH
CHECKED BY
TRACED BY
SCALE
APPROVED BY
DRAWN BY
TITLE
R-Z5 COUNTER Circuit Diagram
DRAWING No.
43W33427 1/3
33
ANRITSU CORP.
3-305/3-306
No. D023-1985.08

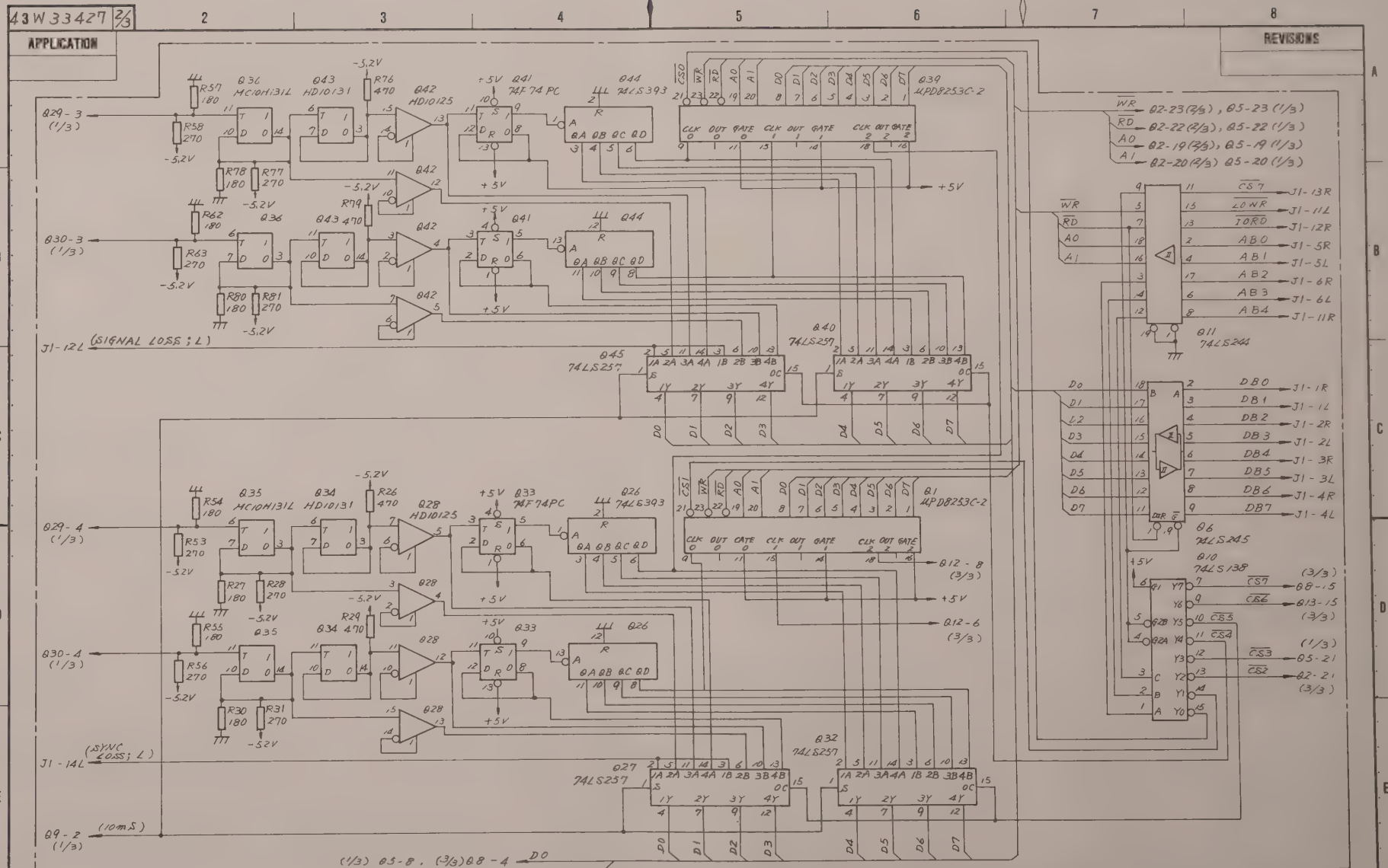
43W33427 2/3
APPLICATION
REVISIONS
Q36 MC10H131L
Q43 HD10131
Q42 HD10125
Q41 74F74PC
Q44 74LS393
Q39 μPD8253C-2
Q40 74LS257
Q45 74LS257
Q11 74LS244
Q6 74LS245
Q10 74LS138
Q35 MC10H131L
Q34 HD10131
Q28 HD10125
Q33 74F74PC
Q26 74LS393
Q1 μPD8253C-2
Q32 74LS257
Q27 74LS257
J1-12L (SIGNAL LOSS; L)
J1-14L (SYNC LOSS; L)
Q9-2 (10mS)
Q29-3 (1/3)
Q30-3 (1/3)
Q29-4 (1/3)
Q30-4 (1/3)
Q12-8 (3/3)
Q12-6 (3/3)
(1/3) Q5-8, (3/3) Q8-4 D0
(1/3) Q5-7, (3/3) Q8-7 D1
(1/3) Q5-6, (3/3) Q8-9 D2
(1/3) Q5-5, (3/3) Q8-12 D3
(1/3) Q5-4, (3/3) Q3-4 D4
(1/3) Q5-3, (3/3) Q3-7 D5
(1/3) Q5-2, (3/3) Q3-9 D6
(1/3) Q5-1, (3/3) Q3-12 D7
DEP
QTY ITEM PART No. DESCRIPTION MATERIAL FINISH
CHECKED BY
APPROVED BY
TRACED BY
DRAWN BY
SCALE :
33
TITLE R-85 COUNTER Circuit Diagram
DRAWING No. 43W33427 2/3
ANRITSU CORP.
3-307/3-308
No. 0023-1985.08

APPLICATION

REVISIONS

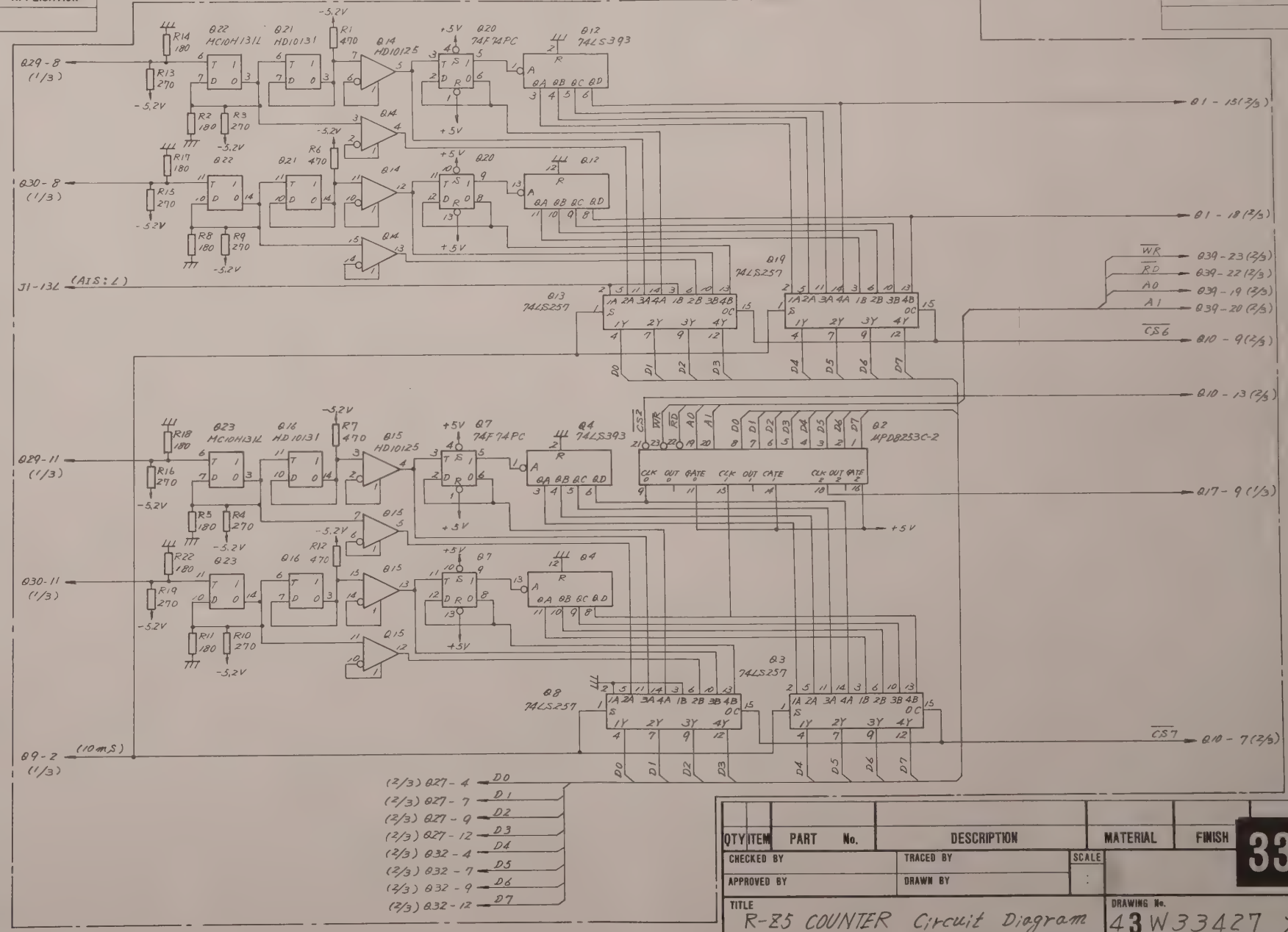

QTY	ITEM	PART No.	DESCRIPTION	MATERIAL	FINISH

CHECKED BY	TRACED BY	SCALE :
APPROVED BY	DRAWN BY	

TITLE: R-Z5 COUNTER Circuit Diagram

DRAWING No. 43W33427 3/3

33

DEP

3.6.5 R-Z6 CONTROL PC board 34

(1) Troubleshooting and adjustment

After lifting the R-Z6 PC board using the extender board, perform the troubleshooting and adjustment.

(a) Step 1

Using an oscilloscope, confirm that the waveform at TP ❶ is as shown in Fig. 3-131.

Also, using a counter, confirm that the frequency is 4.000 MHz.

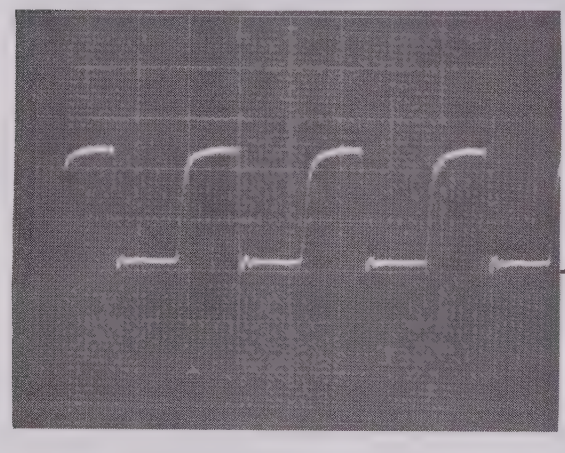

Fig. 3-131 TP ❶ Waveform

If the waveform and frequency are OK, proceed to the next step. If not OK, troubleshoot the Z1 to TP ❶ signal route.

(b) Step 2

Using an oscilloscope, confirm that the level of TP ❷ , TP ❸ , and TP ❹ is high level (+3 to +5.5 V). If the level is OK, proceed to the next step. If not OK, troubleshoot the circuit near TP ❷ , TP ❸ , and TP ❹ .

(c) Step 3

Using an oscilloscope, confirm that the waveform at TP ❺ is as shown in Fig. 3-132.

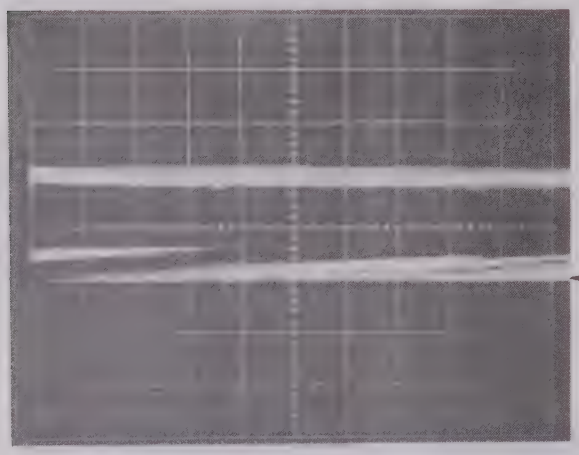

Fig. 3-132 TP ❺ Waveform

If the waveform is OK, proceed to the next step. If not OK, troubleshoot the circuit near TP ❺ .

(d) Step 4

Using a frequency counter, confirm that the period of the signal at TP ❻ is within the 0.999 980 sec to 1.000 020 sec range. If the period is OK, proceed to the next step. If not OK, make the following adjustment:

. Adjustment

Adjust the period of signal at TP ❻ to 1.000 000 sec with C4.

If not OK after performing the above adjustment, troubleshoot the circuit(s) near the faulty test point.

(e) Step 5

Using a voltmeter, confirm that the voltage at TP ❼ is within the +3.2 to +4 V range. If the voltage is OK, Z6 is OK. If not OK, troubleshoot the circuit near TP ❼ .

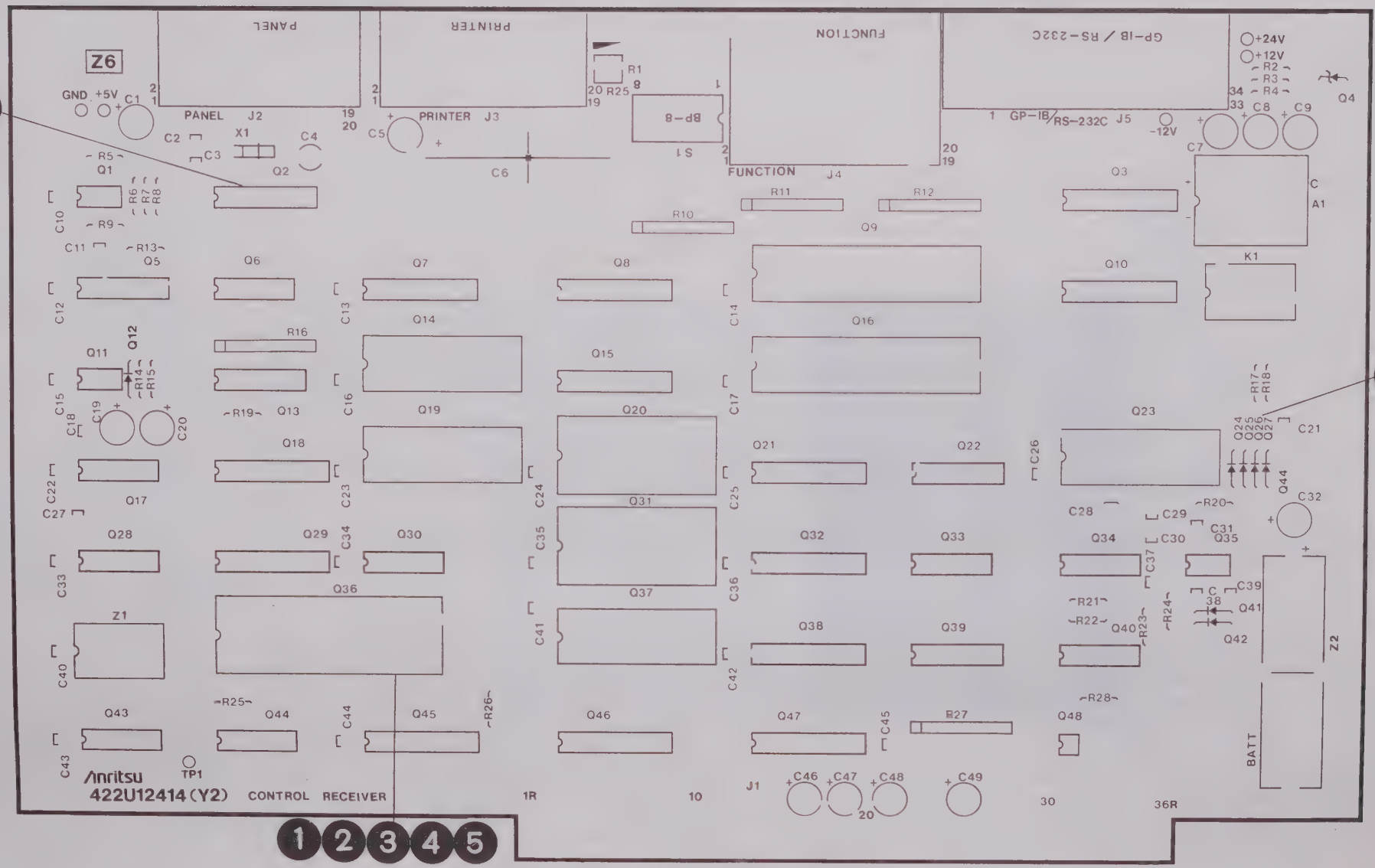

Fig. 3-133 R-Z6 CONTROL PC Board 34 Parts Layout

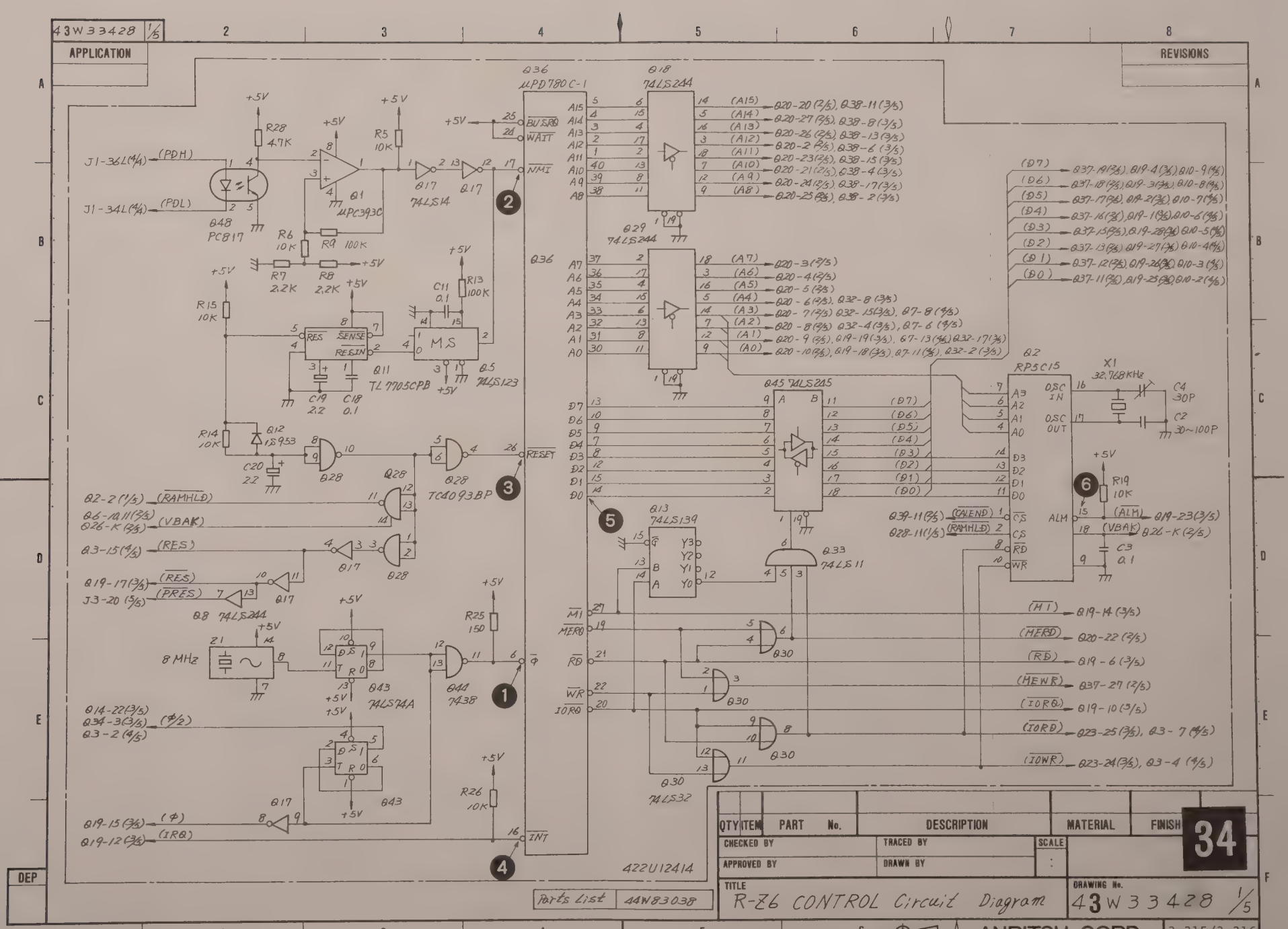
43W33428 1/5
APPLICATION
REVISIONS
Q36 μPD780C-1
Q18 74LS244
Q29 74LS244
Q45 74LS245
Q2 RP5C15
X1 32.768KHz
C4 30P
C2 30~100P
Q13 74LS139
Q33 74LS11
Q30 74LS32
Q1 μPC393C
Q48 PC817
Q17 74LS14
Q11 TL7705CPB
Q5 74LS123
Q12 1S953
Q28 TC4093BP
Q8 74LS244
8 MHz
Q43 74LS74A
Q44 7438
Q30
J1-36L(4/4) (PDH)
J1-34L(4/4) (PDL)
R28 4.7K
R5 10K
R6 10K
R9 100K
R7 2.2K
R8 2.2K
R13 100K
R15 10K
R14 10K
C11 0.1
C19 2.2
C18 0.1
C20 2.2
R25 150
R26 10K
R19 10K
C3 0.1
(A15) Q20-20 (2/5), Q38-11 (3/5)
(A14) Q20-27 (2/5), Q38-8 (3/5)
(A13) Q20-26 (2/5), Q38-13 (3/5)
(A12) Q20-2 (2/5), Q38-6 (3/5)
(A11) Q20-23 (2/5), Q38-15 (3/5)
(A10) Q20-21 (2/5), Q38-4 (3/5)
(A9) Q20-24 (2/5), Q38-17 (3/5)
(A8) Q20-25 (2/5), Q38-2 (3/5)
(A7) Q20-3 (2/5)
(A6) Q20-4 (2/5)
(A5) Q20-5 (2/5)
(A4) Q20-6 (2/5), Q32-8 (3/5)
(A3) Q20-7 (2/5) Q32-15 (3/5), Q7-8 (4/5)
(A2) Q20-8 (2/5) Q32-4 (3/5), Q7-6 (4/5)
(A1) Q20-9 (2/5), Q19-19 (3/5), Q7-13 (4/5) Q32-17 (3/5)
(A0) Q20-10 (2/5), Q19-18 (3/5), Q7-11 (4/5), Q32-2 (3/5)
(D7) Q37-19 (2/5), Q19-4 (3/5), Q10-9 (4/5)
(D6) Q37-18 (2/5), Q19-3 (3/5), Q10-8 (4/5)
(D5) Q37-17 (2/5), Q19-2 (3/5), Q10-7 (4/5)
(D4) Q37-16 (2/5), Q19-1 (3/5), Q10-6 (4/5)
(D3) Q37-15 (2/5), Q19-28 (3/5) Q10-5 (4/5)
(D2) Q37-13 (2/5) Q19-27 (3/5) Q10-4 (4/5)
(D1) Q37-12 (2/5), Q19-26 (3/5), Q10-3 (4/5)
(D0) Q37-11 (2/5), Q19-25 (3/5), Q10-2 (4/5)
Q39-11 (2/5) (CALEND)
Q28-11 (1/5) (RAMHLD)
(ALM) Q19-23 (3/5)
(VBAK) Q26-K (2/5)
(M1) Q19-14 (3/5)
(MERD) Q20-22 (2/5)
(RD) Q19-6 (3/5)
(MEWR) Q37-27 (2/5)
(IORQ) Q19-10 (3/5)
(IORD) Q23-25 (3/5), Q3-7 (4/5)
(IOWR) Q23-24 (3/5), Q3-4 (4/5)
Q2-2 (1/5) (RAMHLD)
Q6-10,11 (2/5)
Q26-K (2/5) (VBAK)
Q3-15 (4/5) (RES)
Q19-17 (3/5) (RES)
J3-20 (5/5) (PRES)
Q14-22 (3/5)
Q34-3 (3/5) (φ/2)
Q3-2 (4/5)
Q19-15 (3/5) (φ)
Q19-12 (3/5) (IRQ)
BUSRQ
WAIT
NMI
RESET
INT
422U12414
Parts List 44W83038
QTY ITEM PART No. DESCRIPTION MATERIAL FINISH
CHECKED BY
TRACED BY
SCALE
APPROVED BY
DRAWN BY
TITLE R-Z6 CONTROL Circuit Diagram
DRAWING No. 43W33428 1/5
34
DEP
No. D023-1985.08
ANRITSU CORP.
3-315/3-316

APPLICATION

REVISIONS

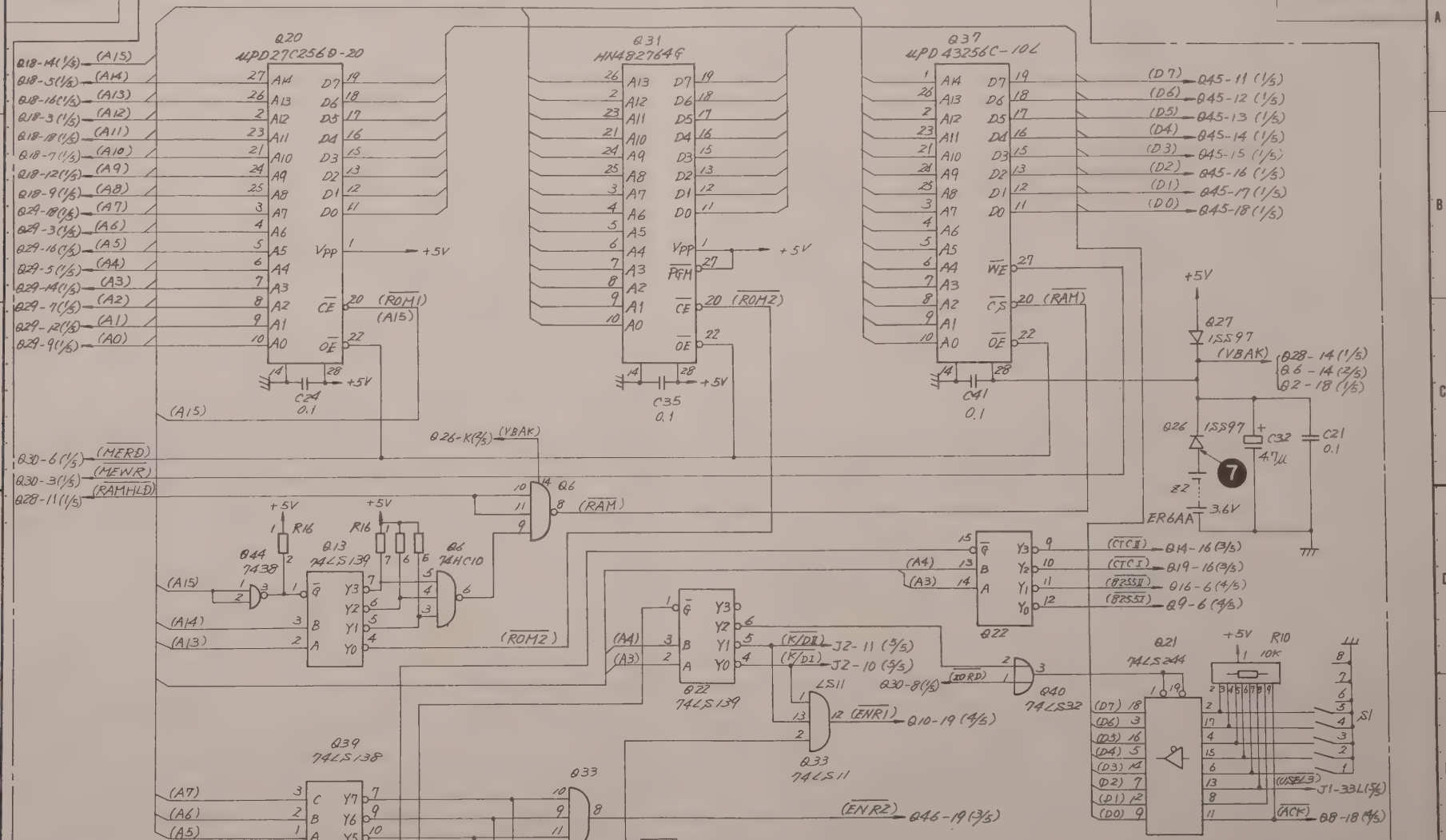

QTY	ITEM	PART No.	DESCRIPTION	MATERIAL	FINISH

CHECKED BY	TRACED BY	SCALE	
APPROVED BY	DRAWN BY	:	

34

TITLE: R-Z6 CONTROL Circuit Diagram

DRAWING No. 43W33428 2/5

DEP

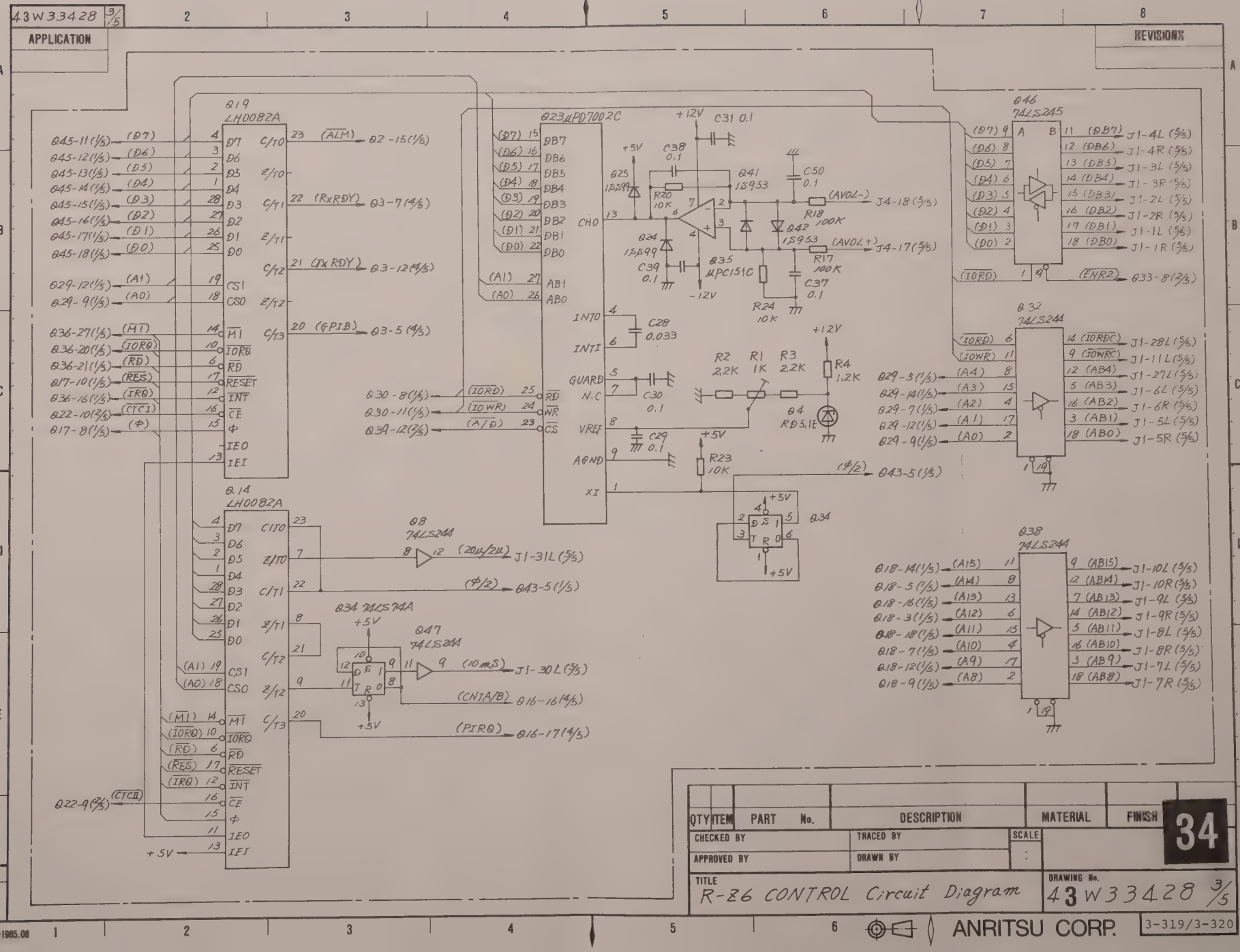
43W33428 3/5
APPLICATION
REVISIONS
Q19 LH0082A
Q14 LH0082A
Q23 μPD7002C
Q46 74LS245
Q32 74LS244
Q38 74LS244
Q8 74LS244
Q34 74LS74A
Q47 74LS244
Q34
Q35 μPC151C
Q41 1S953
Q42 1S953
Q4 RD5.1E
Q45-11(1/5) (D7)
Q45-12(1/5) (D6)
Q45-13(1/5) (D5)
Q45-14(1/5) (D4)
Q45-15(1/5) (D3)
Q45-16(1/5) (D2)
Q45-17(1/5) (D1)
Q45-18(1/5) (D0)
Q29-12(1/5) (A1)
Q29-9(1/5) (A0)
Q36-27(1/5) (M1)
Q36-20(1/5) (IORQ)
Q36-21(1/5) (RD)
Q17-10(1/5) (RES)
Q36-16(1/5) (IRQ)
Q22-10(2/5) (CTCI)
Q17-8(1/5) (Φ)
(ALM) Q2-15(1/5)
(RxRDY) Q3-7(4/5)
(TxRDY) Q3-12(4/5)
(GPIB) Q3-5(4/5)
Q30-8(1/5) (IORD)
Q30-11(1/5) (IOWR)
Q39-12(2/5) (A/D)
(AVOL-) J4-18(5/5)
(AVOL+) J4-17(5/5)
(IORD) (ENR2) Q33-8(2/5)
(IORDC) J1-28L(5/5)
(IOWRC) J1-11L(5/5)
(AB4) J1-27L(5/5)
(AB3) J1-6L(5/5)
(AB2) J1-6R(5/5)
(AB1) J1-5L(5/5)
(AB0) J1-5R(5/5)
(Φ/2) Q43-5(1/5)
(20μ/2μ) J1-31L(5/5)
(Φ/2) Q43-5(1/5)
(10mS) J1-30L(5/5)
(CNTA/B) Q16-16(4/5)
(PIRQ) Q16-17(4/5)
Q22-9(2/5) (CTCII)
Q18-14(1/5) (A15)
Q18-5(1/5) (A14)
Q18-16(1/5) (A13)
Q18-3(1/5) (A12)
Q18-18(1/5) (A11)
Q18-7(1/5) (A10)
Q18-12(1/5) (A9)
Q18-9(1/5) (A8)
(AB15) J1-10L(5/5)
(AB14) J1-10R(5/5)
(AB13) J1-9L(5/5)
(AB12) J1-9R(5/5)
(AB11) J1-8L(5/5)
(AB10) J1-8R(5/5)
(AB9) J1-7L(5/5)
(AB8) J1-7R(5/5)
+12V
-12V
+5V
C31 0.1
C38 0.1
C50 0.1
C39 0.1
C37 0.1
C28 0.033
C30 0.1
C29 0.1
R20 10K
R18 100K
R17 100K
R24 10K
R2 2.2K
R1 1K
R3 2.2K
R4 1.2K
R23 10K
Q25 1SS99
Q24 1SS99
QTY ITEM PART No. DESCRIPTION MATERIAL FINISH
CHECKED BY
TRACED BY
SCALE
APPROVED BY
DRAWN BY
TITLE R-Z6 CONTROL Circuit Diagram
DRAWING No. 43W33428 3/5
34
DEP
No. 0023-1985.08
ANRITSU CORP.
3-319/3-320

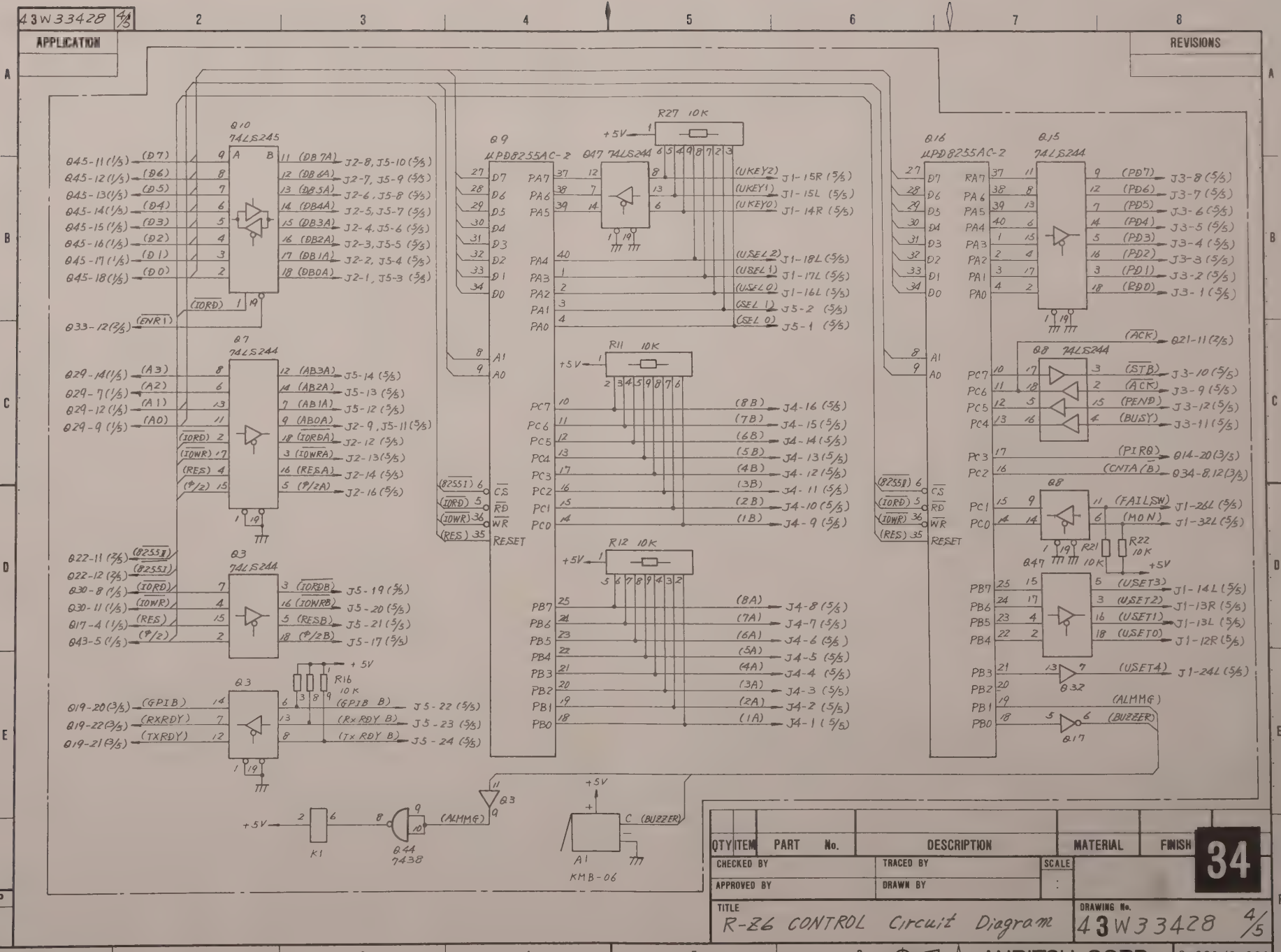
43W33428 4/5
APPLICATION
REVISIONS
Q10 74LS245
Q7 74LS244
Q3 74LS244
Q9 μPD8255AC-2
Q47 74LS244
R27 10K
R11 10K
R12 10K
Q16 μPD8255AC-2
Q15 74LS244
Q8 74LS244
Q47
R21 10K
R22 10K
Q32
Q17
R16 10K
K1
Q44 7438
A1 KMB-06
QTY ITEM PART No. DESCRIPTION MATERIAL FINISH
CHECKED BY
TRACED BY
SCALE
APPROVED BY
DRAWN BY
TITLE
R-Z6 CONTROL Circuit Diagram
DRAWING No.
43W33428 4/5
34
DEP
ANRITSU CORP.
3-321/3-322
No. 0023-1985.08

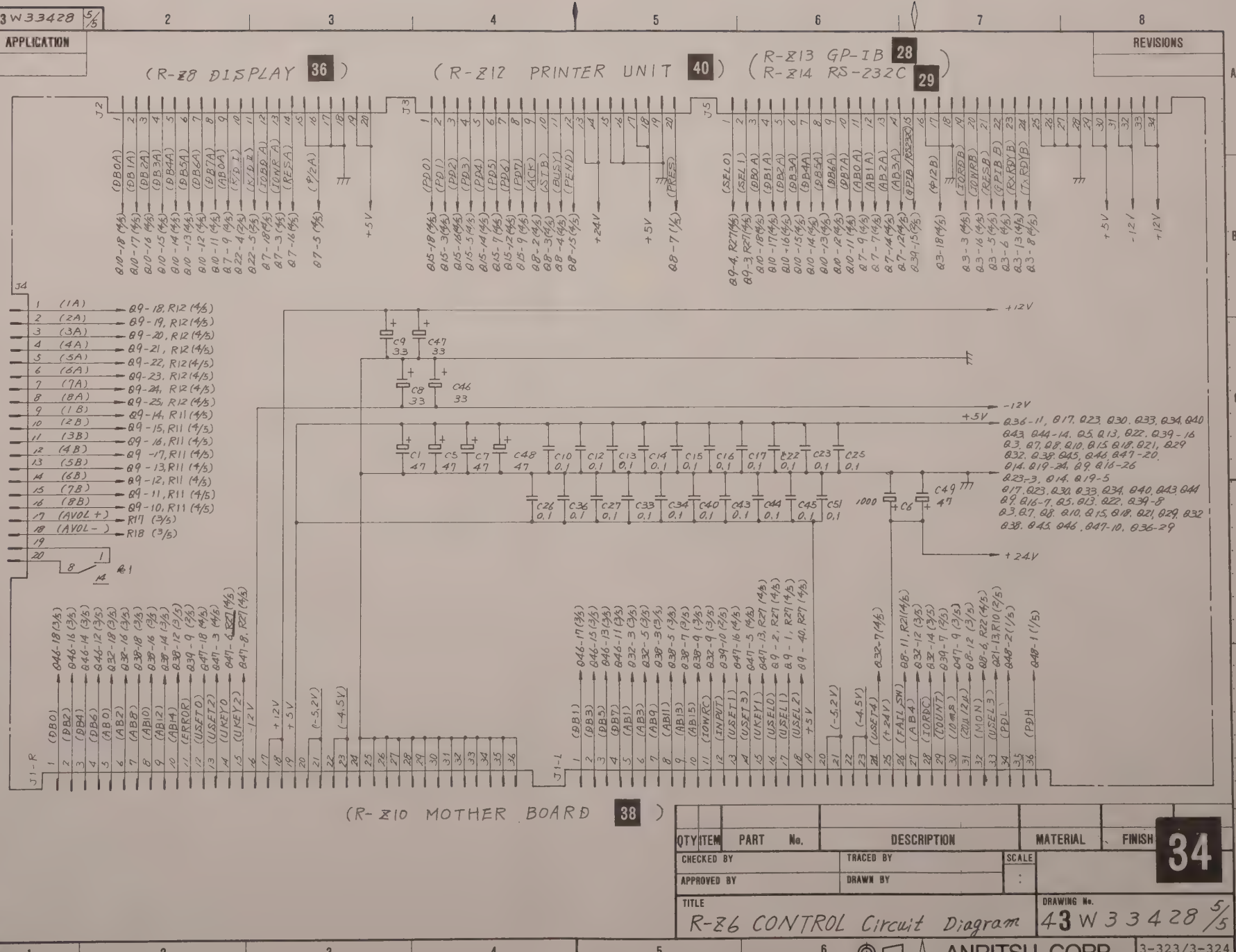
43W33428 5/5
APPLICATION
REVISIONS
(R-Z8 DISPLAY 36)
(R-Z12 PRINTER UNIT 40)
(R-Z13 GP-IB 28
R-Z14 RS-232C 29)
(R-Z10 MOTHER BOARD 38)
J2
J3
J5
J4
J1-R
J1-L
+5V
+24V
-12V
+12V
+24V
+5V
-12V
+12V
+5V
(-5.2V)
(-4.5V)
(-5.2V)
(-4.5V)
(+24V)
(FAIL SW)
(AB4)
(IORDC)
(COUNT)
(10ms)
(20μ 12μ)
(MON)
(USEL3)
(PDL)
(PDH)
(DB0)
(DB2)
(DB4)
(DB6)
(AB0)
(AB2)
(AB8)
(AB10)
(AB12)
(AB14)
(ERROR)
(USET0)
(USET2)
(UKEY0)
(UKEY2)
(DB1)
(DB3)
(DB5)
(DB7)
(AB1)
(AB3)
(AB9)
(AB11)
(AB13)
(AB15)
(IOWRC)
(INPUT)
(USET1)
(USET3)
(UKEY1)
(USEL0)
(USEL1)
(USEL2)
(USET4)
(+24V)
(FAIL SW)
(AB4)
(IORDC)
(COUNT)
(10ms)
(20μ 12μ)
(MON)
(USEL3)
(PDL)
(PDH)
Q36-11, Q17, Q23, Q30, Q33, Q34, Q40
Q43, Q44-14, Q5, Q13, Q22, Q39-16
Q3, Q7, Q8, Q10, Q15, Q18, Q21, Q29
Q32, Q38, Q45, Q46, Q47-20,
Q14, Q19-24, Q9, Q16-26
Q23-3, Q14, Q19-5
Q17, Q23, Q30, Q33, Q34, Q40, Q43, Q44
Q9, Q16-7, Q5, Q13, Q22, Q39-8
Q3, Q7, Q8, Q10, Q15, Q18, Q21, Q29, Q32
Q38, Q45, Q46, Q47-10, Q36-29
Q9-18, R12 (4/5)
Q9-19, R12 (4/5)
Q9-20, R12 (4/5)
Q9-21, R12 (4/5)
Q9-22, R12 (4/5)
Q9-23, R12 (4/5)
Q9-24, R12 (4/5)
Q9-25, R12 (4/5)
Q9-14, R11 (4/5)
Q9-15, R11 (4/5)
Q9-16, R11 (4/5)
Q9-17, R11 (4/5)
Q9-13, R11 (4/5)
Q9-12, R11 (4/5)
Q9-11, R11 (4/5)
Q9-10, R11 (4/5)
R17 (3/5)
R18 (3/5)
(AVOL +)
(AVOL -)
QTY
ITEM
PART No.
DESCRIPTION
MATERIAL
FINISH
34
CHECKED BY
TRACED BY
SCALE
APPROVED BY
DRAWN BY
TITLE
R-Z6 CONTROL Circuit Diagram
DRAWING No.
43W33428 5/5
DEP
No. 0023-1985.08
ANRITSU CORP.
3-323/3-324

3.6.6 R-Z8 DISPLAY 36, R-Z10 MOTHERBOARD 38,
R-Z11 SWITCH 39, R-Z12 PRINTER UNIT 40,
PRINTER INTERFACE 41,
PRINTER CONTROL 42,
and EXTENDER BOARD PC boards

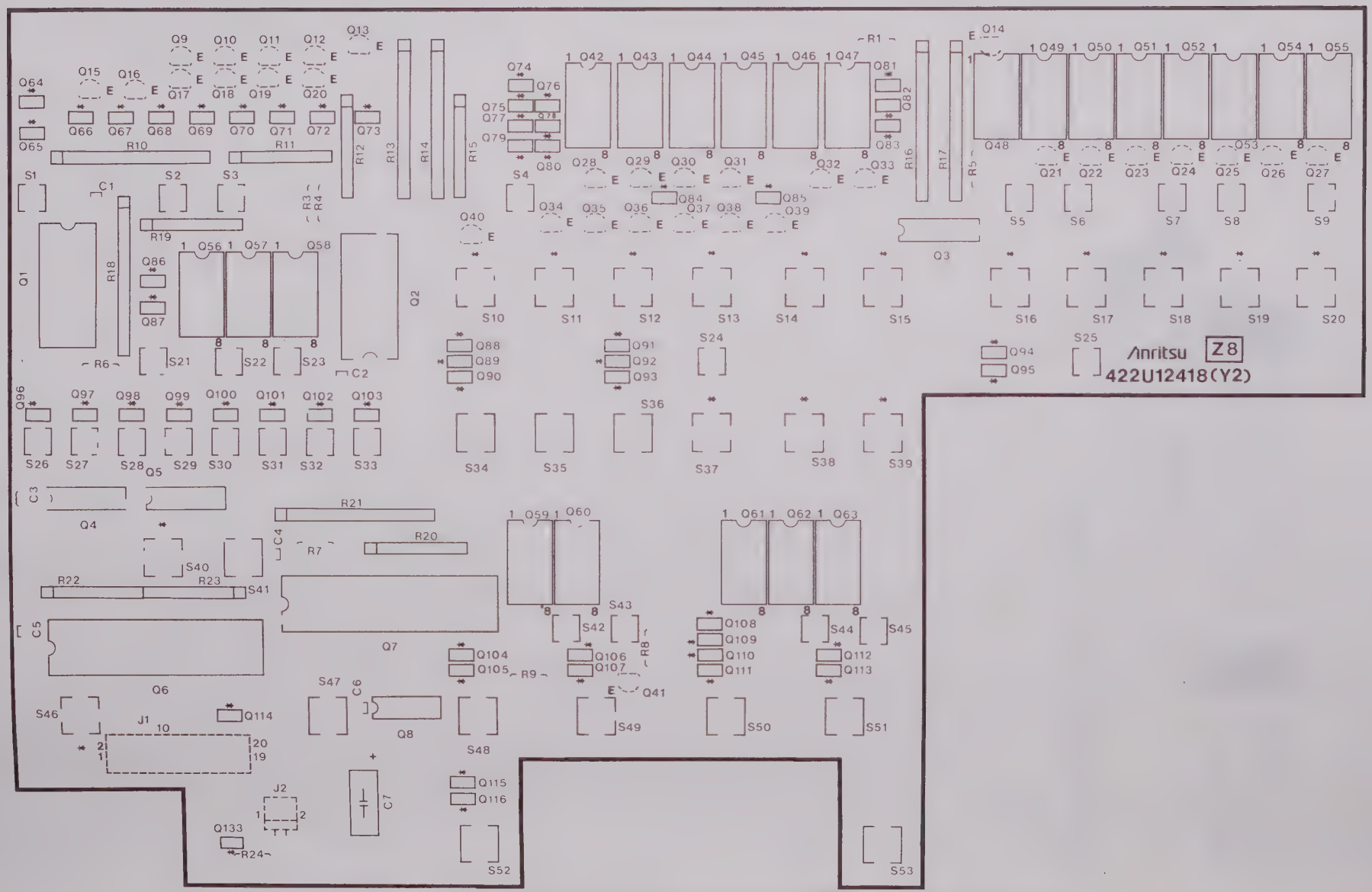

Fig. 3-134 R-Z8 DISPLAY PC Board 36 Parts Layout

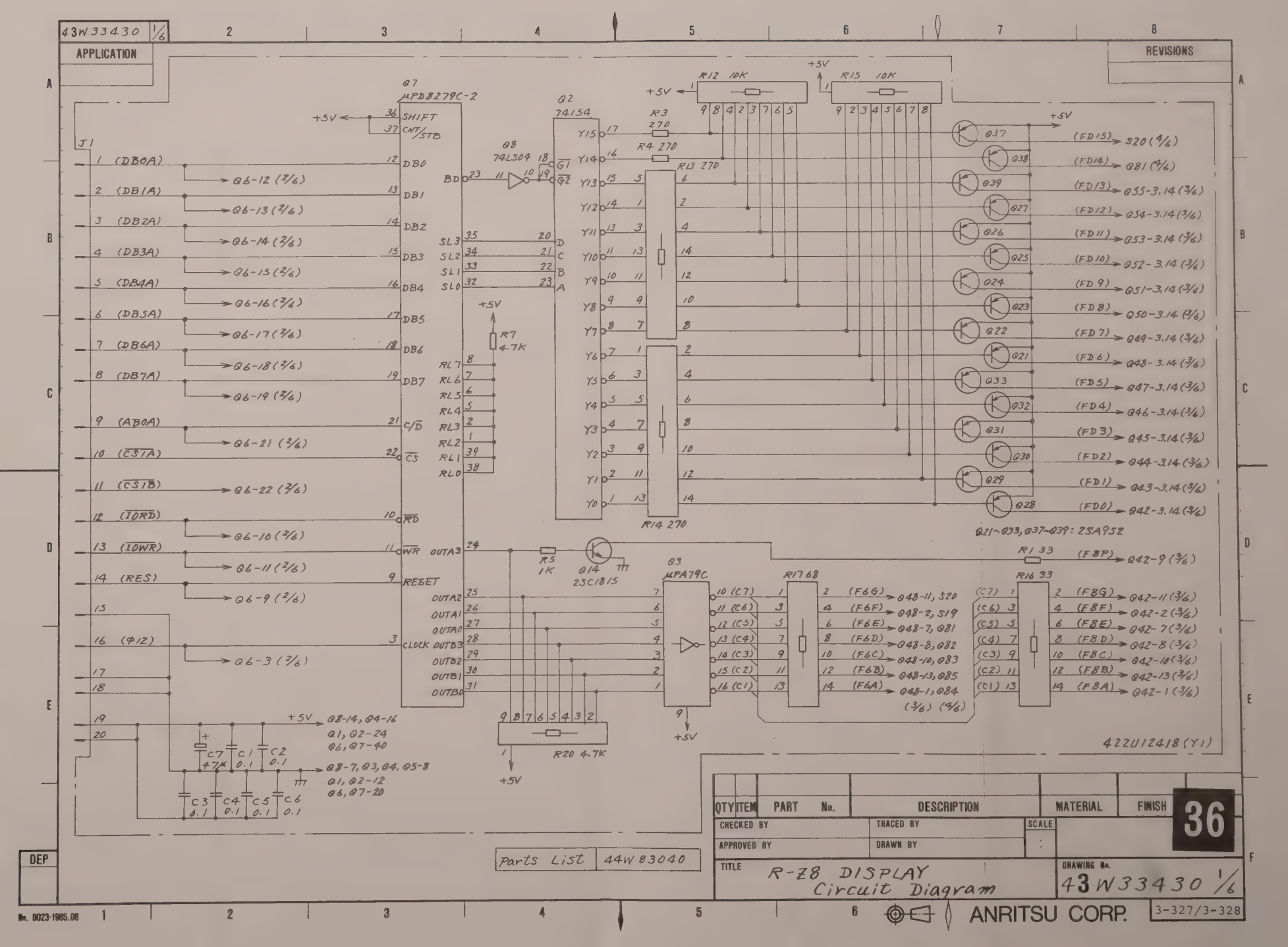
43W33430 1/6
APPLICATION
REVISIONS
Q7 μPD8279C-2
Q2 74154
Q8 74LS04
Q3 μPA79C
Q14 2SC1815
R1768
R12 10K
R15 10K
R16 33
R1 33
R2 1K
R3 270
R4 270
R13 270
R14 270
R7 4.7K
R20 4.7K
J1
SHIFT
CNT/STB
DB0
DB1
DB2
DB3
DB4
DB5
DB6
DB7
C/D
CS
RD
WR
RESET
CLOCK
OUTA3
OUTA2
OUTA1
OUTA0
OUTB3
OUTB2
OUTB1
OUTB0
BD
SL3
SL2
SL1
SL0
RL7
RL6
RL5
RL4
RL3
RL2
RL1
RL0
(DB0A)
(DB1A)
(DB2A)
(DB3A)
(DB4A)
(DB5A)
(DB6A)
(DB7A)
(AB0A)
(CS1A)
(CS1B)
(IORD)
(IOWR)
(RES)
(Φ12)
C7 47μ
C1 0.1
C2 0.1
C3 0.1
C4 0.1
C5 0.1
C6 0.1
Parts List 44W83040
422U12418(Y1)
QTY ITEM PART No. DESCRIPTION MATERIAL FINISH
CHECKED BY
APPROVED BY
TRACED BY
DRAWN BY
SCALE
TITLE R-Z8 DISPLAY Circuit Diagram
DRAWING No. 43W33430 1/6
36
DEP
No. 0023-1985.08
ANRITSU CORP.
3-327/3-328

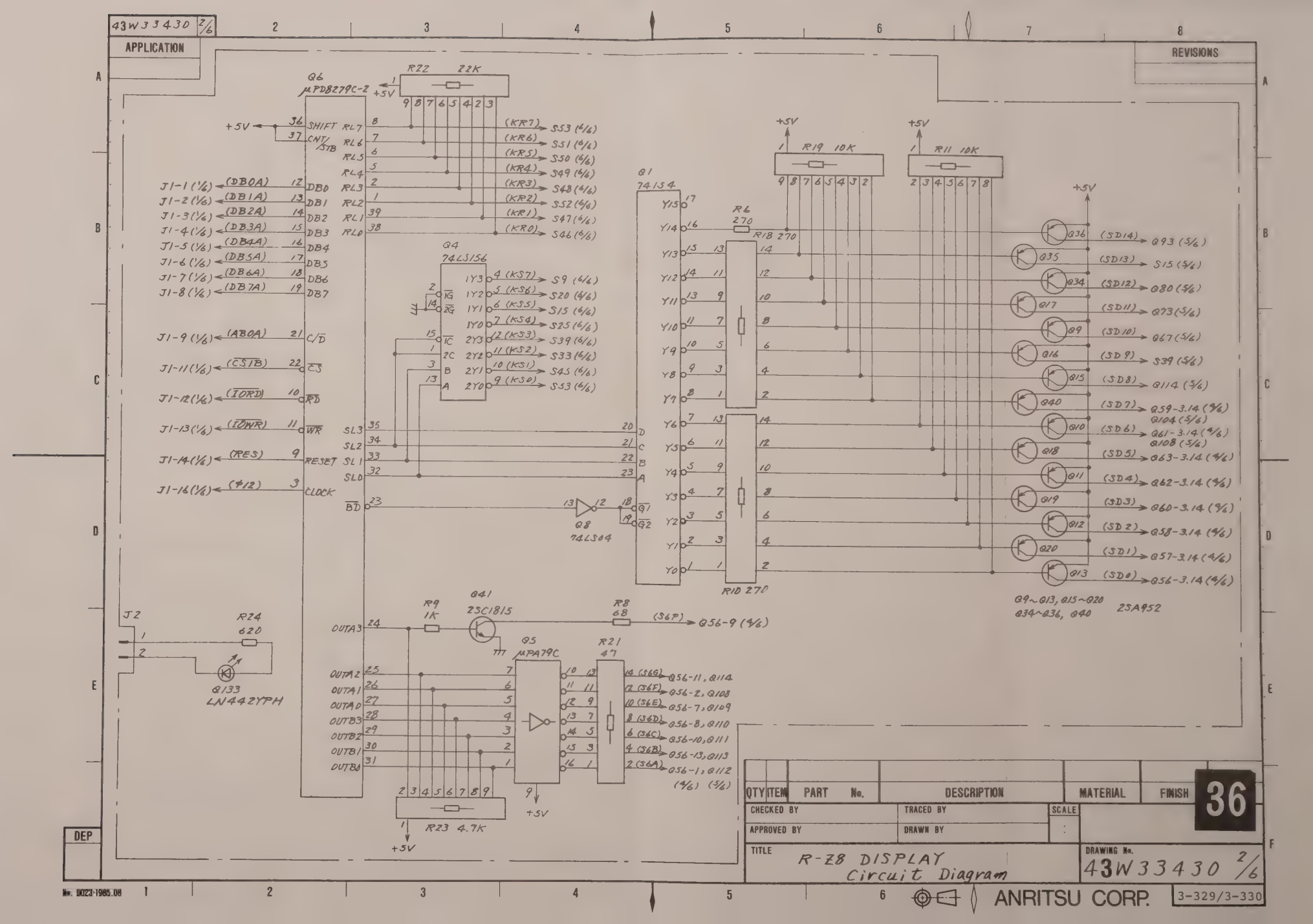
43W33430 2/6
APPLICATION
REVISIONS
Q6 μPD8279C-2
RZ2 2.2K
+5V
SHIFT
CNT/STB
DB0A DB1A DB2A DB3A DB4A DB5A DB6A DB7A
A0A
CS1B
IORD
IOWR
RES
Φ/2
DB0 DB1 DB2 DB3 DB4 DB5 DB6 DB7
C/D
CS
RD
WR
RESET
CLOCK
RL7 RL6 RL5 RL4 RL3 RL2 RL1 RL0
KR7 KR6 KR5 KR4 KR3 KR2 KR1 KR0
S53 (4/6)
S51 (4/6)
S50 (4/6)
S49 (4/6)
S48 (4/6)
S52 (4/6)
S47 (4/6)
S46 (4/6)
Q4 74LS156
KS7 KS6 KS5 KS4 KS3 KS2 KS1 KS0
S9 (4/6)
S20 (4/6)
S15 (4/6)
S25 (4/6)
S39 (4/6)
S33 (4/6)
S45 (4/6)
S53 (4/6)
SL3 SL2 SL1 SL0
BD
Q8 74LS04
Q1 74154
R6 270
R18 270
R10 270
R19 10K
R11 10K
SD14 SD13 SD12 SD11 SD10 SD9 SD8 SD7 SD6 SD5 SD4 SD3 SD2 SD1 SD0
Q36 Q35 Q34 Q17 Q9 Q16 Q15 Q40 Q10 Q18 Q11 Q19 Q12 Q20 Q13
Q93 (5/6)
S15 (5/6)
Q80 (5/6)
Q73 (5/6)
Q67 (5/6)
S39 (5/6)
Q114 (5/6)
Q59-3.14 (5/6)
Q104 (5/6)
Q61-3.14 (4/6)
Q108 (5/6)
Q63-3.14 (4/6)
Q62-3.14 (4/6)
Q60-3.14 (4/6)
Q58-3.14 (4/6)
Q57-3.14 (4/6)
Q56-3.14 (4/6)
Q9~Q13, Q15~Q20
Q34~Q36, Q40
2SA952
J2
R24 620
Q133 LN442YPH
R9 1K
Q41 2SC1815
R8 68
S6P
Q56-9 (4/6)
Q5 μPA79C
R21 47
OUTA3 OUTA2 OUTA1 OUTA0 OUTB3 OUTB2 OUTB1 OUTB0
S6G S6F S6E S6D S6C S6B S6A
Q56-11, Q114
Q56-2, Q108
Q56-7, Q109
Q56-8, Q110
Q56-10, Q111
Q56-13, Q113
Q56-1, Q112
(4/6) (5/6)
R23 4.7K
+5V
QTY ITEM PART No. DESCRIPTION MATERIAL FINISH
CHECKED BY
APPROVED BY
TRACED BY
DRAWN BY
SCALE
TITLE
R-Z8 DISPLAY Circuit Diagram
DRAWING No.
43W33430 2/6
DEP
36
No. D023-1985.08
ANRITSU CORP.
3-329/3-330

APPLICATION

REVISIONS

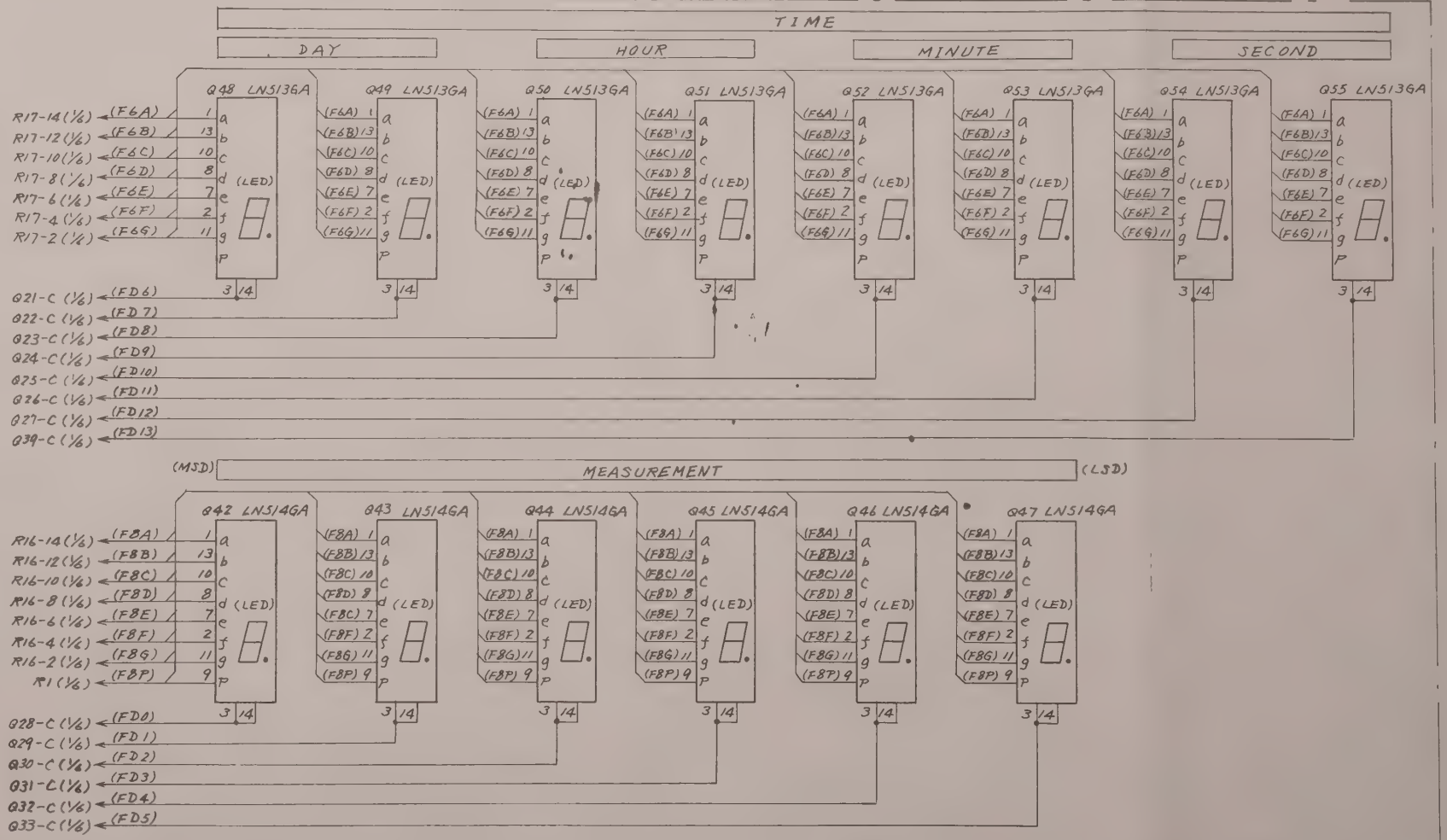

QTY	ITEM	PART No.	DESCRIPTION	MATERIAL	FINISH

CHECKED BY | TRACED BY | SCALE :

APPROVED BY | DRAWN BY

TITLE R-Z8 DISPLAY Circuit Diagram

DRAWING No. 43W33430 3/6

36

DEP

APPLICATION

REVISIONS

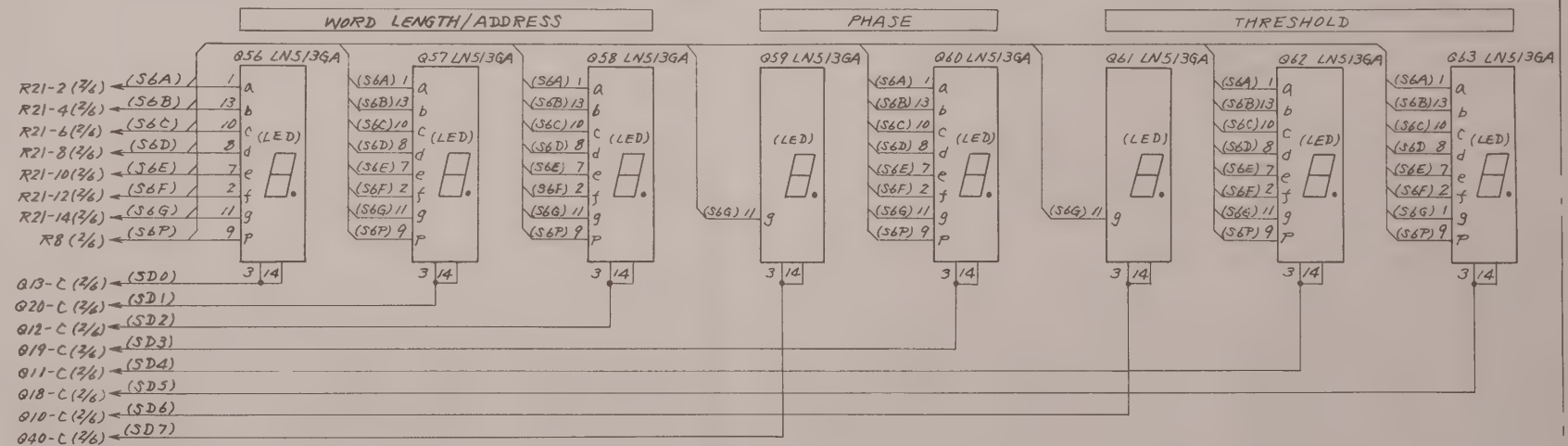

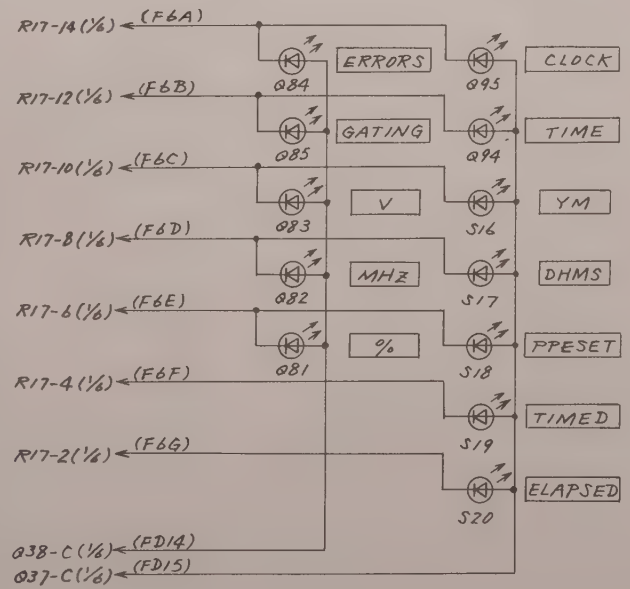

Q81~Q83, Q85, Q94, Q95 : LN342 GPH
Q84 : LN242 RPH

QTY	ITEM	PART No.	DESCRIPTION	MATERIAL	FINISH

CHECKED BY | TRACED BY | SCALE :

APPROVED BY | DRAWN BY

TITLE: R-Z8 DISPLAY Circuit Diagram

DRAWING No. 43W33430 4/6

36

DEP

APPLICATION

REVISIONS

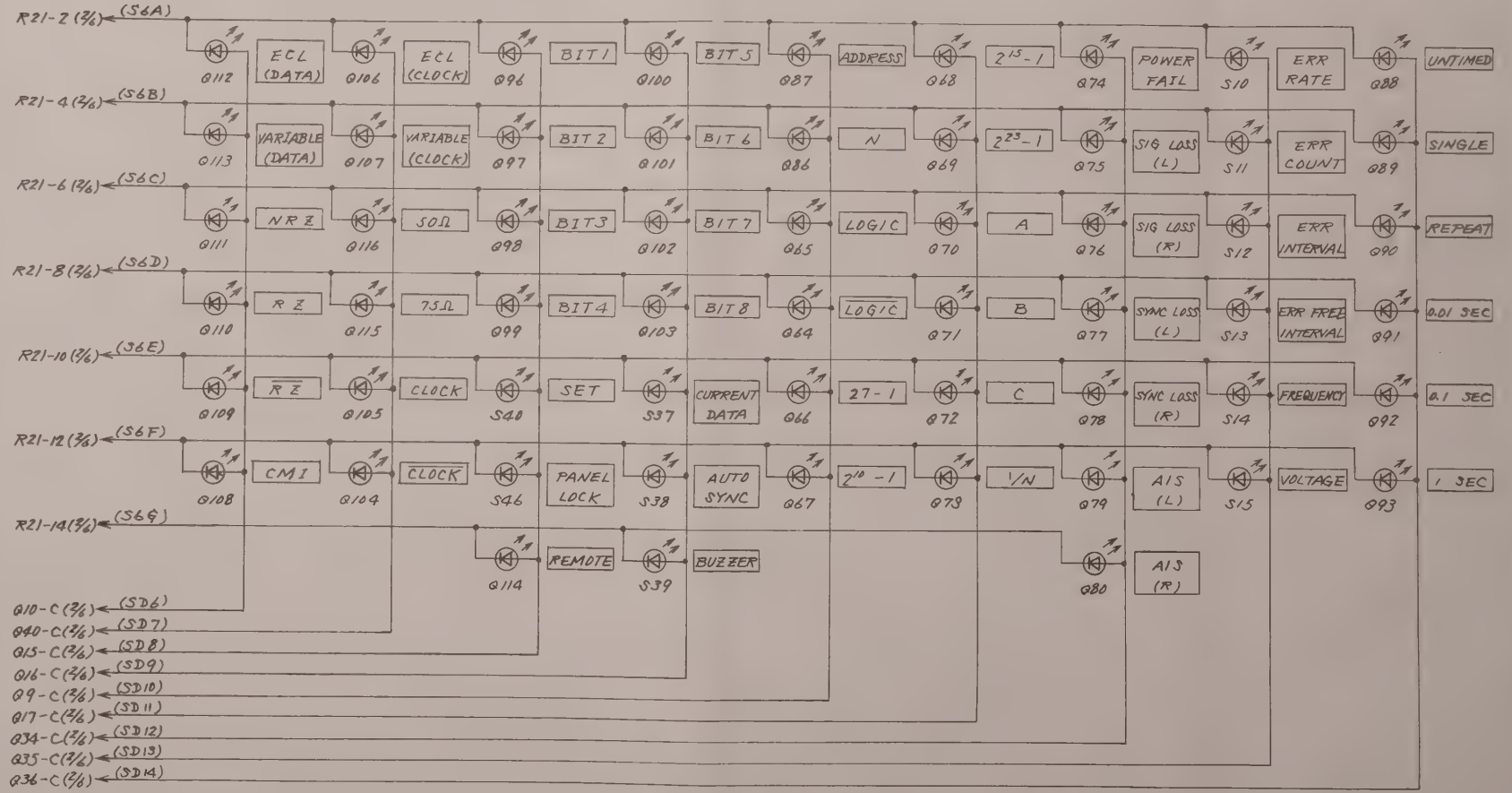

Q64~Q73, Q86~Q93, Q96~Q116 : LN342GPH
Q74, Q75, Q77, Q79 : LN442YPH
Q76, Q78, Q80 : LN242RPH

QTY	ITEM	PART No.	DESCRIPTION	MATERIAL	FINISH

CHECKED BY | TRACED BY | SCALE :
APPROVED BY | DRAWN BY

TITLE R-Z8 DISPLAY Circuit Diagram

DRAWING No. 43W33430 5/6

36

DEP

APPLICATION

REVISIONS

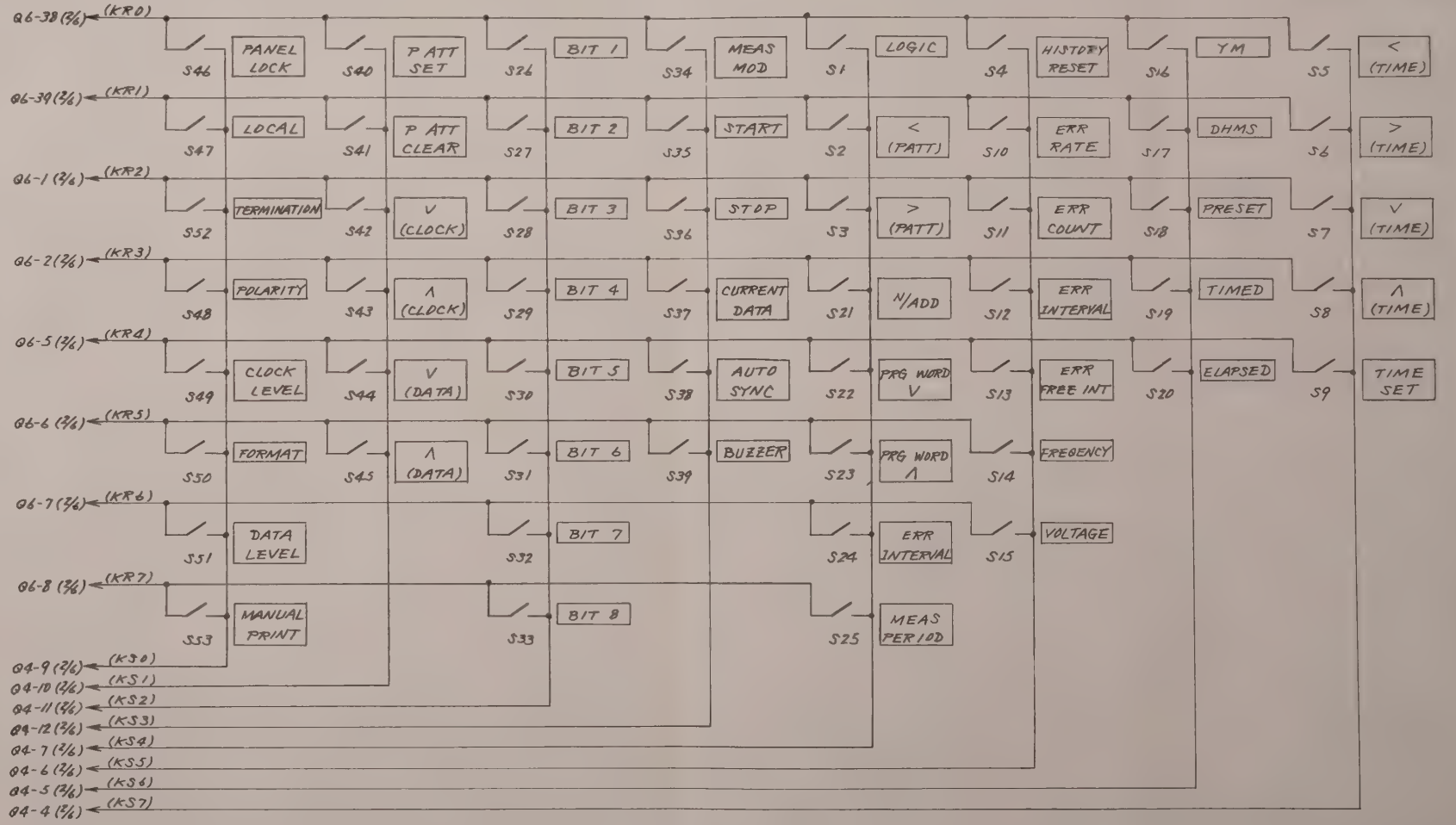

QTY	ITEM	PART No.	DESCRIPTION	MATERIAL	FINISH

CHECKED BY | TRACED BY | SCALE :

APPROVED BY | DRAWN BY

TITLE R-Z8 DISPLAY Circuit Diagram

DRAWING No. 43W33430 6/6

36

DEP

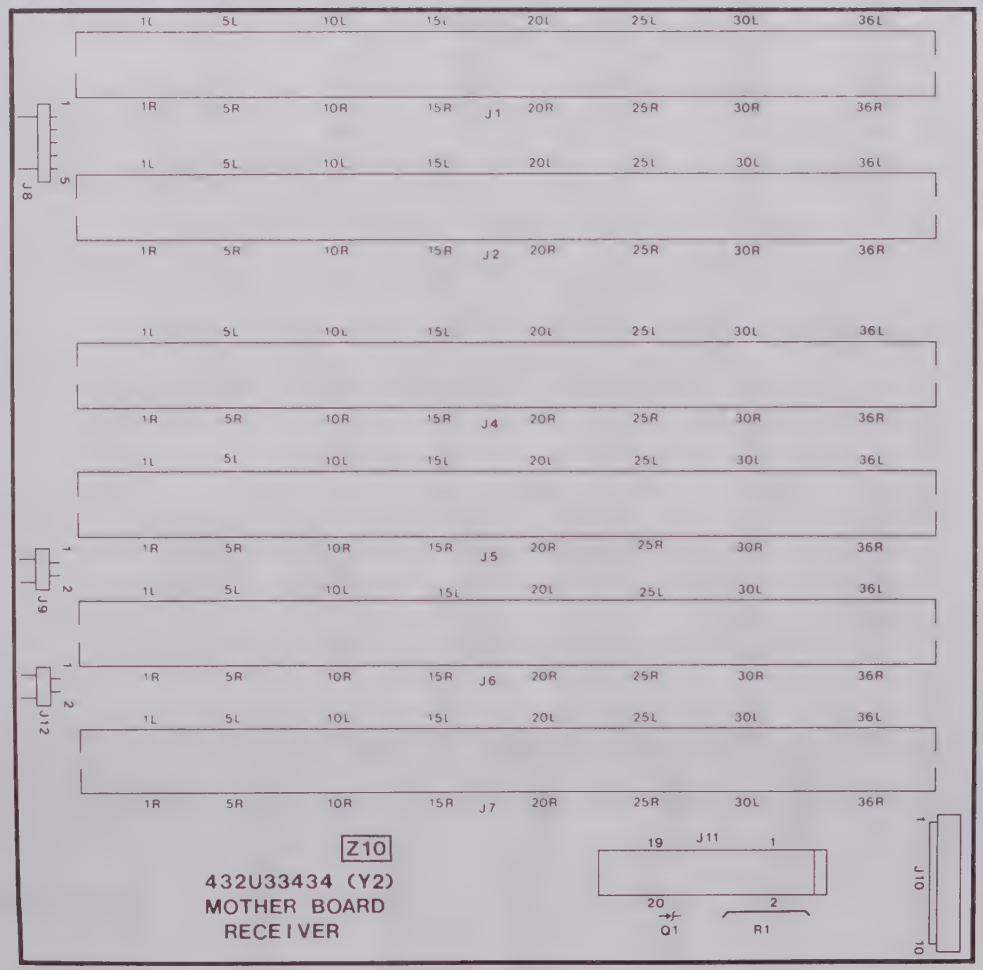

Fig. 3-135 R-Z10 MOTHERBOARD PC Board 38 Parts Layout

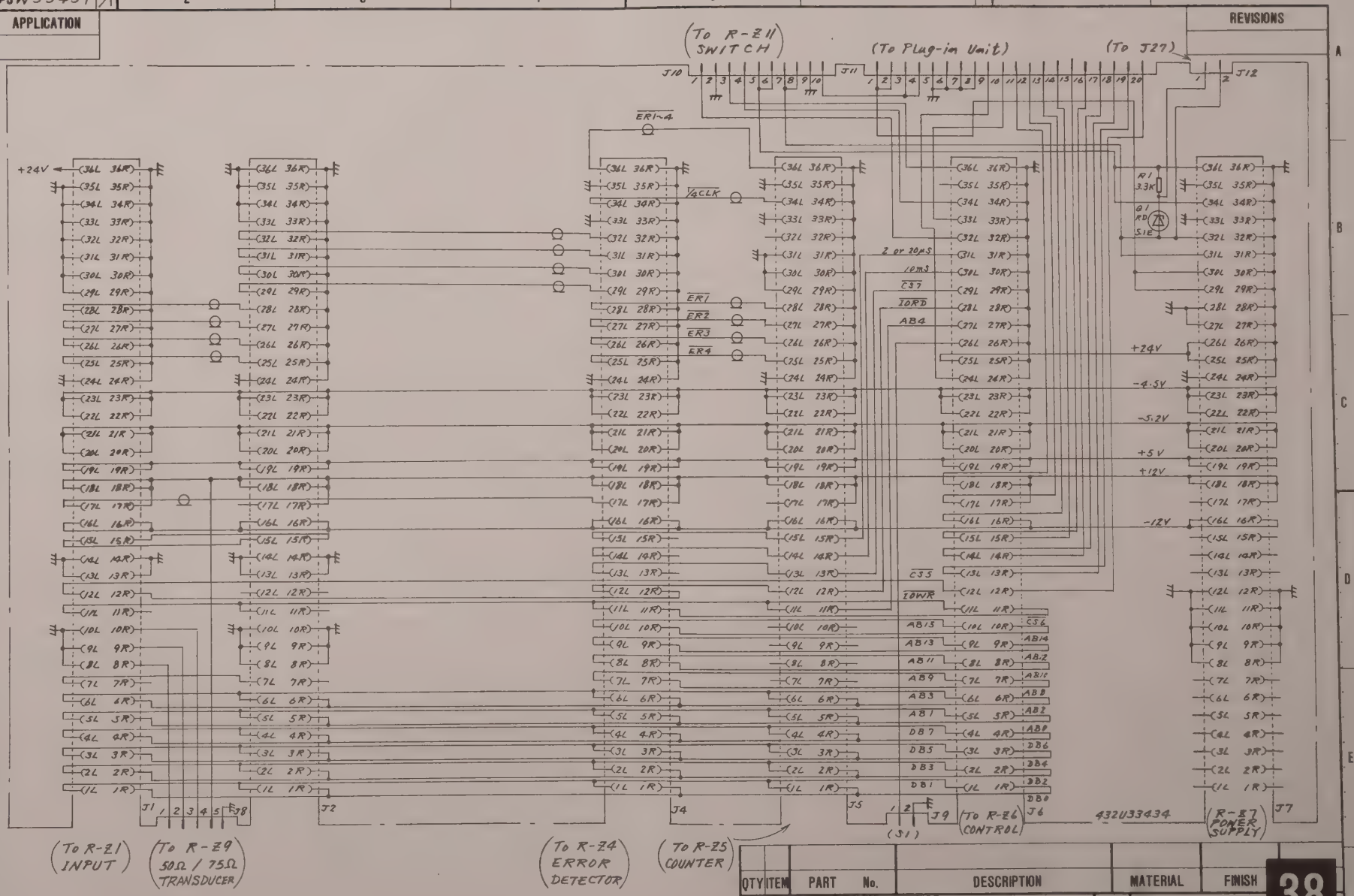
43W33431 1/1
APPLICATION
REVISIONS
(To R-Z11 SWITCH)
(To Plug-in Unit)
(To J27)
J10
J11
J12
+24V
ERI~4
1/4CLK
ER1
ER2
ER3
ER4
2 or 20mS
10mS
CS7
IORD
AB4
CS5
IOWR
R1 3.3K
Q1 RD 51E
+24V
-4.5V
-5.2V
+5V
+12V
-12V
AB15
AB13
AB11
AB9
AB7
AB5
AB3
AB1
DB7
DB5
DB3
DB1
CS6
AB14
AB12
AB10
AB8
AB6
AB4
AB2
AB0
DB6
DB4
DB2
DB0
J1
J2
J3
J4
J5
J6
J7
J8
J9
(S1)
(To R-Z1 INPUT)
(To R-Z9 50Ω / 75Ω TRANSDUCER)
(To R-Z4 ERROR DETECTOR)
(To R-Z5 COUNTER)
(To R-Z6 CONTROL)
(R-Z7 POWER SUPPLY)
432U33434
Parts List 44W83043
QTY ITEM PART No. DESCRIPTION MATERIAL FINISH
38
CHECKED BY
TRACED BY
SCALE
APPROVED BY
DRAWN BY
TITLE R-Z10 MOTHER BOARD Circuit Diagram
DRAWING No. 43W33431 1/1
DEP
ANRITSU CORP.
3-339
No. 0023-1985.08

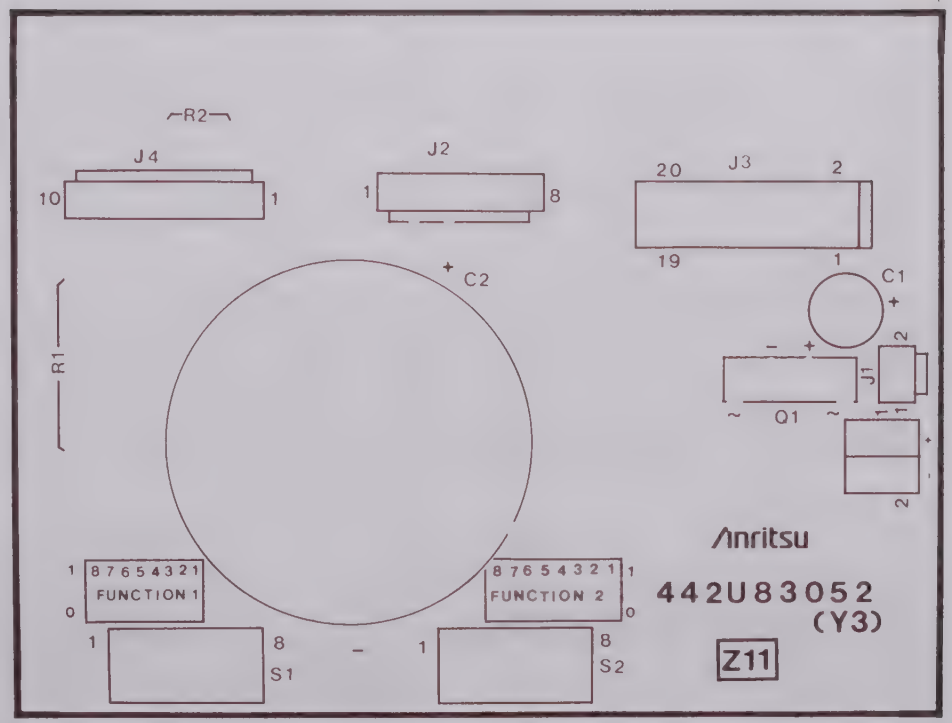

Fig. 3-136 R-Z11 SWITCH PC Board 39 Parts Layout

44W83045 1/1

APPLICATION	REVISIONS

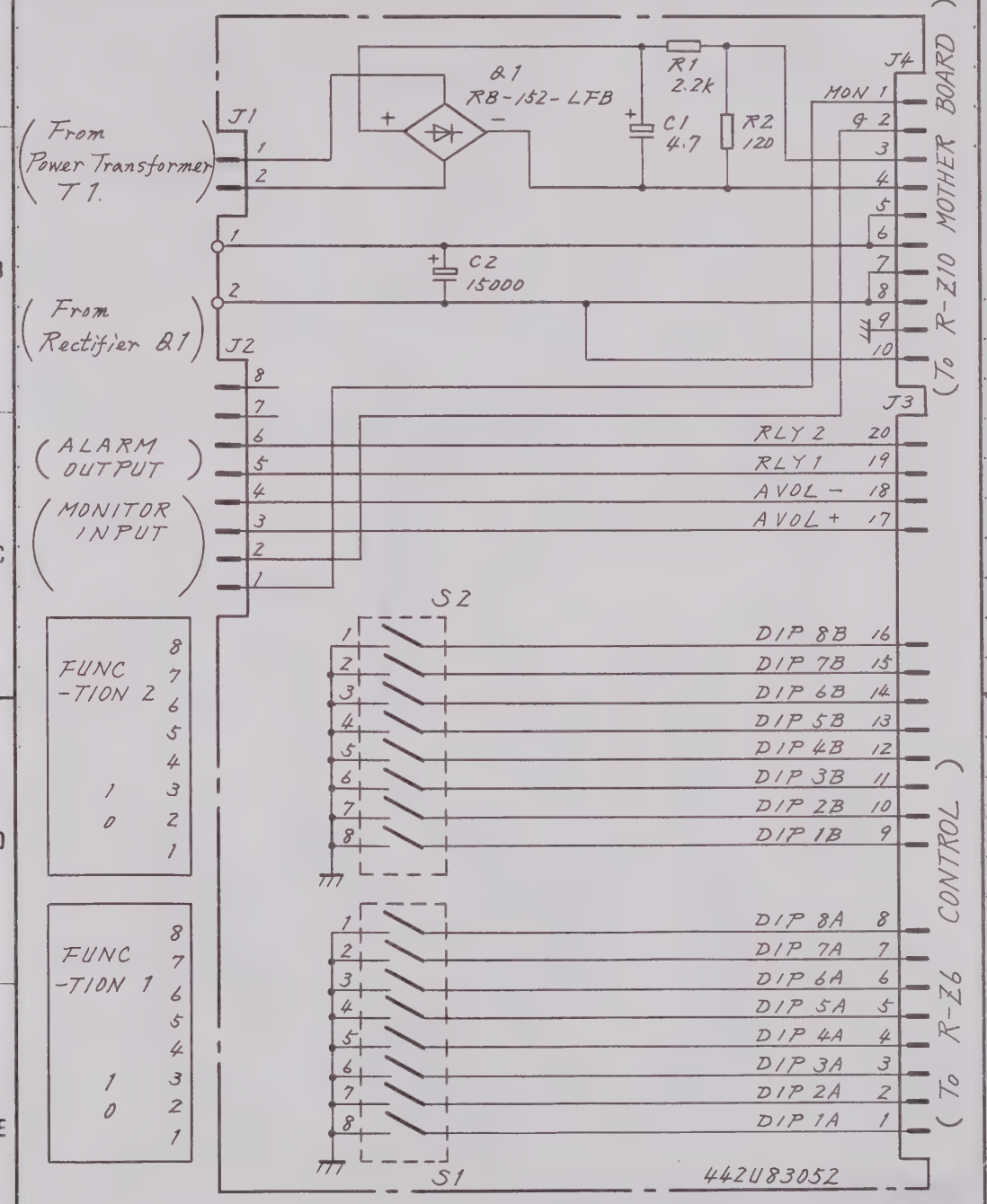

Parts List 44W83044

39

QTY	ITEM	PART No.	DESCRIPTION	MATERIAL	FINISH

CHECKED BY	TRACED BY	SCALE
APPROVED BY	DRAWN BY	:

DEP

TITLE: R-Z11 SWITCH Circuit Diagram.

DRAWING No. 44W83045 1/1

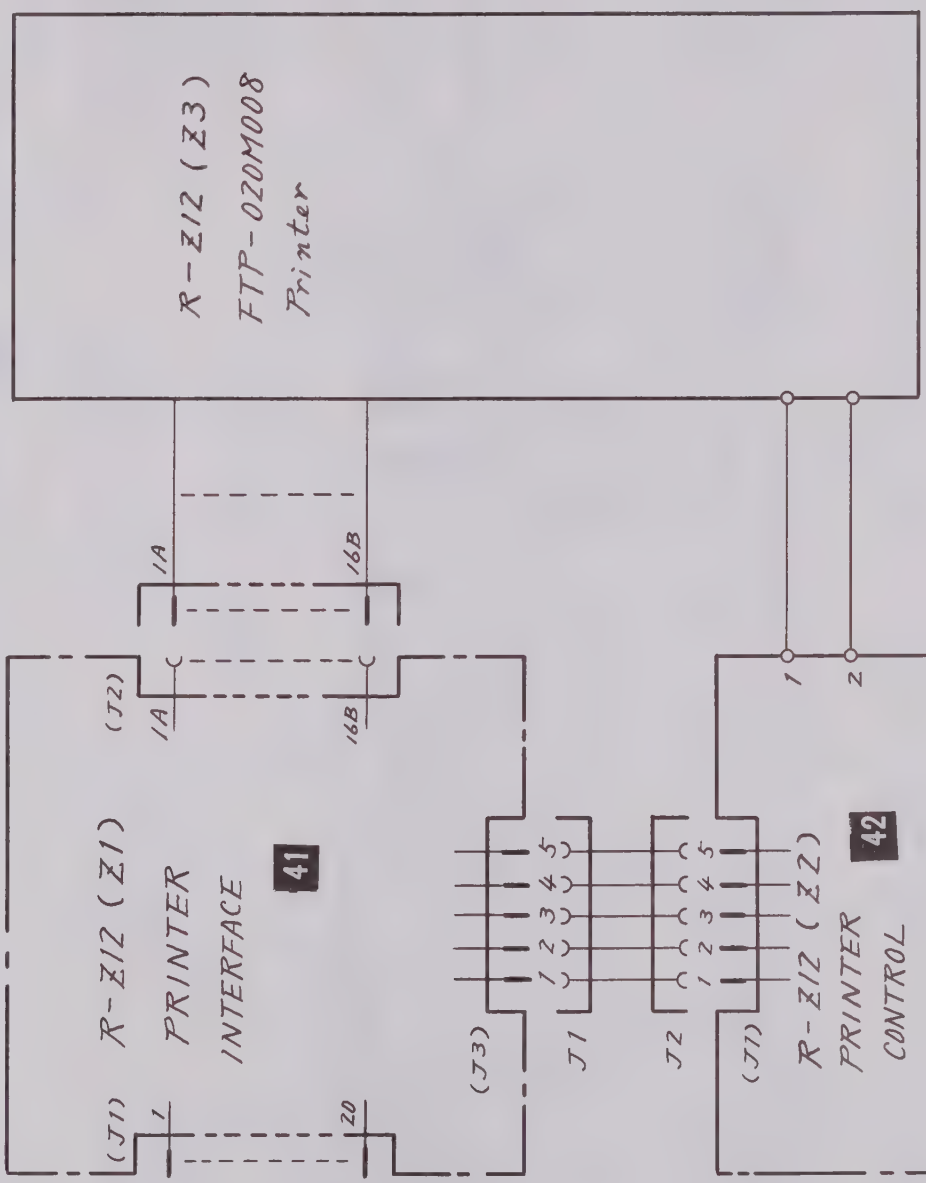

Parts List 44W85802

40

QTY	ITEM	PART No.	DESCRIPTION	MATERIAL	FINISH	NOTE

CHECKED BY		TRACED BY	SCALE :
APPROVED BY		DRAWN BY	

DEP

TITLE R-Z12 PRINTER UNIT Circuit Diagram.

DRAWING No. 44W85803 1/1

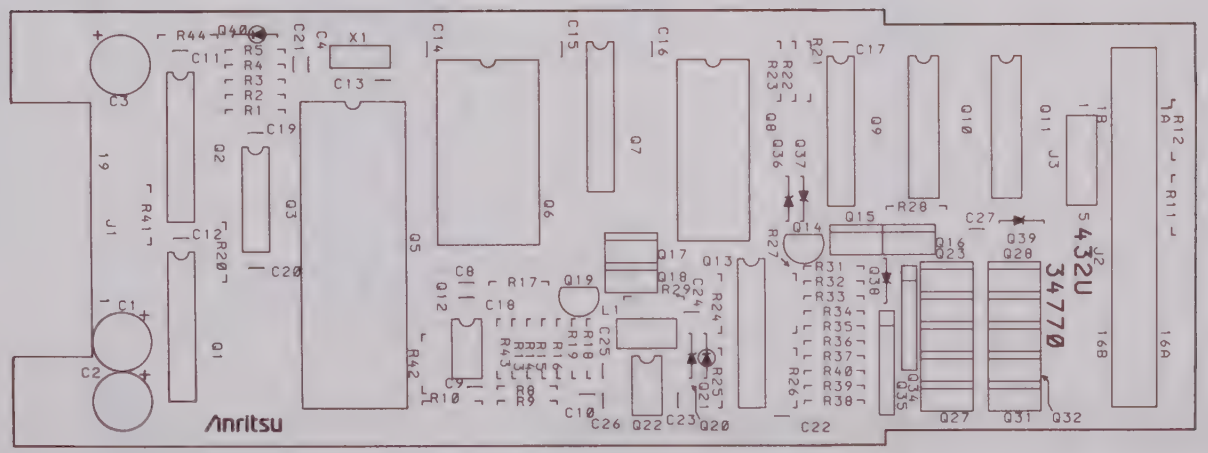

Fig. 3-137 R-Z12 (Z1) PRINTER INTERFACE PC Board 41 Parts Layout

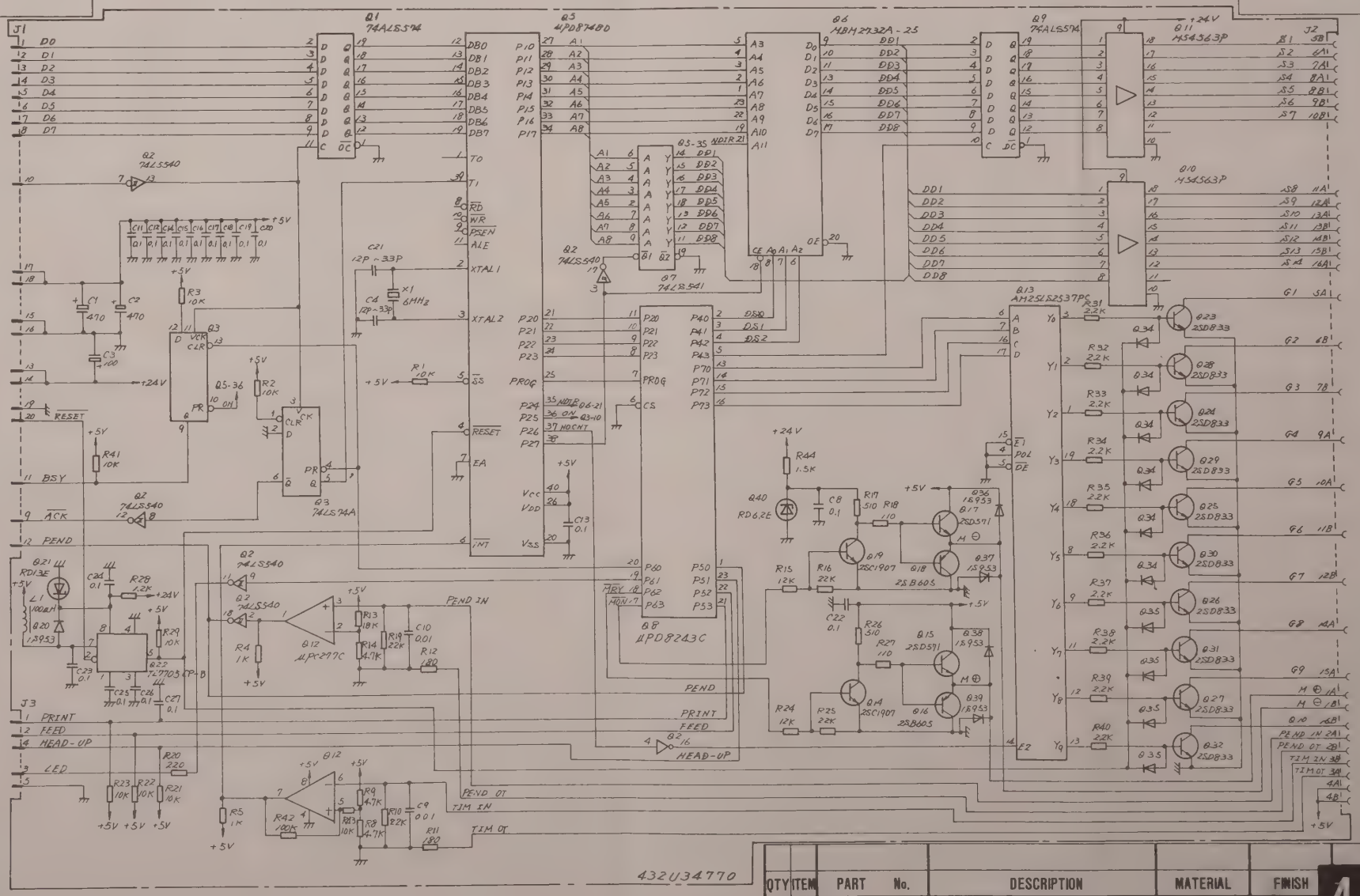
APPLICATION
REVISIONS
J1
Q1 74ALS574
Q5 μPD8748D
Q6 MBM2732A-25
Q9 74ALS574
Q11 M54563P
J2
Q10 M54563P
Q2 74LS540
Q7 74LS541
Q3 74LS74A
Q13 AM25LS2537PC
Q8 μPD8243C
Q12 μPC277C
Q22 TL7705
Q20 LTS953
Q21 RD13E
Q40 RD6.2E
Q23 2SD839
Q28 2SD833
Q24 2SD833
Q29 2SD833
Q25 2SD833
Q30 2SD833
Q26 2SD833
Q31 2SD833
Q27 2SD833
Q32 2SD833
Q36 LTS953
Q17 2SD571
Q19 2SC1907
Q18 2SB605
Q37 LTS953
Q15 2SD571
Q14 2SC1907
Q16 2SB605
Q38 LTS953
Q39 LTS953
J3
PRINT
FEED
HEAD-UP
LED
RESET
BSY
ACK
PEND
PEND IN
PEND OT
TIM IN
TIM OT
PRINT
FEED
HEAD-UP
+24V
+5V
XTAL1
XTAL2
RD
WR
PSEN
ALE
PROG
RESET
EA
INT
TO
T1
DB0
DB1
DB2
DB3
DB4
DB5
DB6
DB7
P10
P11
P12
P13
P14
P15
P16
P17
P20
P21
P22
P23
P24
P25
P26
P27
P40
P41
P42
P43
P50
P51
P52
P53
P60
P61
P62
P63
DS0
DS1
DS2
Vcc
Vdd
Vss
CS
DDR21
DDR1
DDR2
DDR3
DDR4
DDR5
DDR6
DDR7
DDR8
DD1
DD2
DD3
DD4
DD5
DD6
DD7
DD8
A1
A2
A3
A4
A5
A6
A7
A8
A9
A10
A11
G1
G2
G3
G4
G5
G6
G7
G8
G9
M⊕
M⊖
PEND IN
PEND OT
TIM IN
TIM OT
C1 470
C2 470
C3 100
C4 12P~33P
X1 6MHz
C21 12P~33P
C8 0.1
C10 0.01
C9 0.01
C11 C12 C14 C15 C17 C18 C19 C20 0.1
C22 0.1
C24 0.1
C25 0.1
C26 0.1
C27 0.1
C29 0.1
R1 10K
R2 10K
R3 10K
R4 1K
R5 1K
R12 180
R15 12K
R16 22K
R17 510
R18 110
R20 220
R21 10K
R22 10K
R23 10K
R24 12K
R25 22K
R26 510
R27 110
R28 1.2K
R29 10K
R31 2.2K
R32 2.2K
R33 2.2K
R34 2.2K
R35 2.2K
R36 2.2K
R37 2.2K
R38 2.2K
R39 2.2K
R40 22K
R41 10K
R42 10K
R44 1.5K
R13 18K
R14 4.7K
R19 22K
R9 4.7K
R10 22K
R11 180
R43 10K
R8 4.7K
L1 100μH
Q5-35
Q36-21
Q43-10
Q4 OV
HOCNT
KEY 16
MON 17
Q5-36 ON
Parts List 44W85804
432U34770
DEP
QTY ITEM PART No. DESCRIPTION MATERIAL FINISH
CHECKED BY
TRACED BY
APPROVED BY
DRAWN BY
SCALE
TITLE R-812(21) PRINTER INTERFACE Circuit Diagram
DRAWING No. 43W34762 1/1
41
ANRITSU CORP.
3-345
No. 0023-1985.08

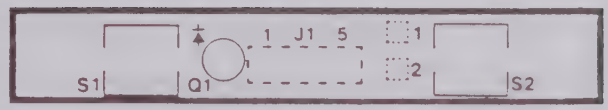

Fig. 3-138 R-Z12 (Z2) PRINTER CONTROL PC Board 42 Parts Layout

44W85806 1/1

APPLICATION	REVISIONS

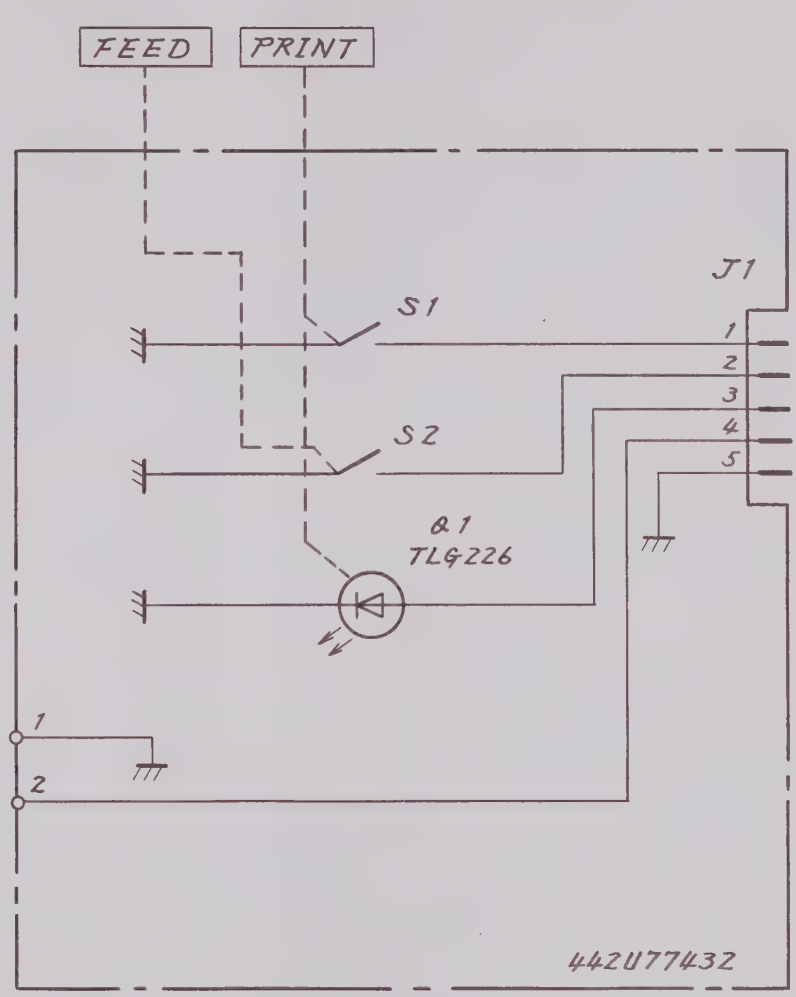

Parts List 44W85805

QTY	ITEM	PART No.	DESCRIPTION	MATERIAL	FINISH

42

CHECKED BY	TRACED BY	SCALE
APPROVED BY	DRAWN BY	:

DEP

TITLE R-2I2(22) PRINTER CONTROL Circuit Diagram.

DRAWING No. 44W85806 1/1

SECTION 4

REPLACEABLE PARTS

4.1 Introduction

This paragraph contains information about ordering replacement parts or components. The following tables (Table 4-2 and 4-3) show circuit references (hereafter: CKT REF) and abbreviations used for items in the Parts Lists. The quantity of each item in the Parts List is "one" unless a quantitative description is given in the "NOTE" column.

4.2 Ordering information

When ordering parts, please supply the following description from the PARTS LIST.

Table 4-1 Ordering Information

No.	Item	Example
1	Instrument name	ME522A Receiver, Error Rate Measuring Equipment
2	Part location	Part of Z1 INPUT
3	CKT REF	R1
4	Part name	ARD25T 103J Note: Part name is given in parentheses ( ) in the P.L. (Parts List). Parts with asterisks* require factory adjustment upon repair. When ordering part(s) marked with an asterisk, give full description of the part(s).
5	Quantity	1
6	Instrument serial no.	M31257

When ordering PC boards with parts mounted, please include the Z-number under item (2) above instead of items (3) and (4).

4.3 Circuit References and Abbreviations used in the Parts List

(1) Circuit references

Table 4-2

AT:	Attenuator	K:	Relay	Q:	Transistor, diode, IC, rectifier	V:	Neon lamp, vacuum tube
C:	Capacitor	L:	Coil, microinductor	R:	Resistor	X:	Crystal OSC
F:	Fuse	M:	Meter, timer	S:	Switch	Z:	Unit
J:	Jack, plug, connector	P:	Lamp	T:	Transformer		

(2) Abbreviations

Table 4-3

A:	amperes	Multi:	multiplying
Att, R var:	variable attenuator using film elements	N-ch:	N-channel
		non-lin:	non-linear taper
BL:	boundary layer	Non-pol:	non polarity
Cer:	ceramic	NPN:	negative-positive-negative
CF:	carbon film	Ω:	ohms
Comp:	composition	p:	pico (x 10^{-12})
CRT:	cathode-ray tube	Plast:	plastic film
Di:	diode	PMTR:	potentiometer
DIP:	dual in-line package	PNP:	positive-negative-positive
Elect:	electrolytic aluminum	p-p:	peak-to-peak value
F:	farad	RFC:	RF choke
FET:	field-effect transistor	R-lamp:	resistor lamp
G:	ground	rms:	effective value (root-mean-square)
Ge:	germanium	SBD:	Schottky barrier diode
H:	henry	SCR:	silicon-controlled rectifier
Hz:	hertz	Si:	silicon
IC:	integrated circuit	SRD:	step-recovery diode
IEC:	Conforms to IEC Safety Standards.	Tant:	tantalum
J-FET:	junction FET	TM:	time-lag
k:	kilo (x 10^{3})	Tr:	transistor
LED:	light-emitting diode	Trans:	transformer
M:	mega (x 10^{6})	μ:	micro (x 10^{-6})
m:	milli (x 10^{-3})	V:	volt
MF:	metallized film	Var:	variable
MOS-FET:	metal-oxide semiconductor FET	WW:	wire-wound
M paper:	metallized paper	XTAL:	crystal
M plast:	metallized plastic film		

4.4 Capacitance/Resistance Reading

(1) Resistance reading

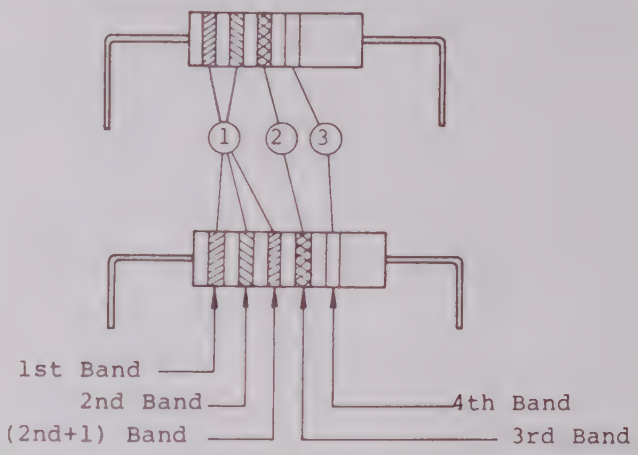

	①		②	③
COLOR	Figure		Multiplier	Tolerance
	1st	2nd	3rd	4th
Black	0	0	$x10^0$	-
Brown	1	1	$x10^1$	-
Red	2	2	$x10^2$	-
Orange	3	3	$x10^3$	-
Yellow	4	4	$x10^4$	-
Green	5	5	$x10^5$	±0.5%
Blue	6	6	$x10^6$	-
Purple	7	7	$x10^7$	-
Grey	8	8	$x10^8$	-
White	9	9	$x10^9$	-
Gold	-	-	$x10^{-1}$	±5%
Silver	-	-	$x10^{-2}$	±10%
-----	-	-		±20%

For Examples:

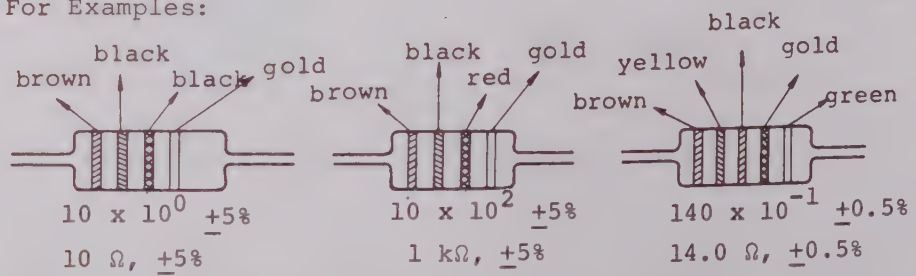

Fig. 4-1 Resistance Reading

(2) Capacitance reading

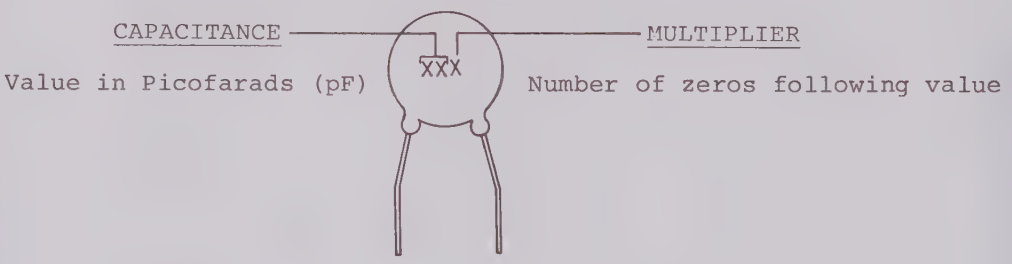

EXAMPLES: 103 = 10,000 pF = 10^{-8} F or 0.01 μF
302 = 3,000 pF = $3x10^{-9}$ F or 0.003 μF
676 = 67,000,000 pF = $67x10^{-6}$ F or 67 μF

(a) Ceramic and polyester capacitors

Indication	0.5	1	10	101	102	103	104
Capacity	0.5 pF	1 pF	10 pF	100 pF	1000 pF	0.01 μF	0.1 μF

Example:
Ceramic Capacitor

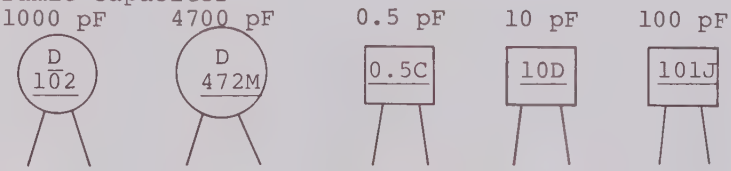

Capacity values are always underlined.

Polyester Capacitor

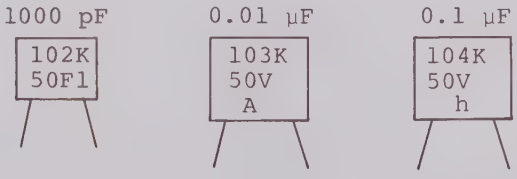

(b) Tantalum, metallized, and electrolytic capacitors

Indication	OR47	010	100	101
Capacity	0.47 μF	1 μF	10 μF	100 μF

Fig. 4-2 Capacitance Reading

4.5 Replaceable Parts List

Table 4-4 ME522A (T) Parts List Table

Schematic No.	Circuit Diagram Name	Z No.	PC Board Drawing No.	Parts List No.
1	ME522A Transmitter	——	——	44W83022
2	Synthesizer section	T-Z1	——	44W83060
3	10 MHz	T-Z1 (Z1)	442U83125	44W83061
4	100 MHz	T-Z1 (Z2)	442U83127	44W83062
5	100 MHz x N	T-Z1 (Z3)	442U83129	44W83063
6	OUTPUT DIVIDER	T-Z1 (Z4)	432U33470	44W83064
7	U1 SIGNAL SUPPLY	T-Z1 (Z5)	442U85699	44W83065
8	REFERENCE SIGNAL BRANCHER	T-Z1 (Z6)	442U83131	44W83067
9	10 kHz/1 MHz LOOP	T-Z1 (Z7)	432U34768	44W83068
10	100 MHz LOOP	T-Z1 (Z8)	432U34785	44W83069
11	100 MHz VCO	T-Z1 (Z9)	432U33474	44W83070
12	10 MHz LOOP	T-Z1 (Z10)	432U34763	44W83071
13	10 MHz/20 MHz DOUBLER	T-Z1 (Z11)	442U83149	44W83072
14	MAIN LOOP	T-Z1 (Z12)	432U34787	44W83073
15	MAIN VCO	T-Z1 (Z13)	432U33476	44W83074
16	MAIN MIX 1	T-Z1 (Z14)	442U83155	44W83075
17	MAIN MIX 2	T-Z1 (Z15)	442U83157	44W83076
18	U2 MOTHERBOARD	T-Z1 (Z16)	432U33478	44W83077
19	U2 SIGNAL SUPPLY	T-Z1 (Z17)	442U83161	44W83078
20	PATTERN GENERATOR-I	T-Z2	422U12390	44W83023
21	PATTERN GENERATOR-II	T-Z3	422U12392	44W83024

Table 4-4 ME522A (T) Parts List Table (Continued)

Schematic No.	Circuit Diagram Name	Z No.	PC Board Drawing No.	Parts List No.
22	OUTPUT	T-Z4	422U12394	44W83025
23	CONTROL	T-Z5	422U12396	44W83026
24	POWER SUPPLY	T-Z6	422U12398	44W83027
25	DISPLAY	T-Z7	422U12400	44W83028
26	50 Ω/75 Ω TRANSDUCER	T-Z8	442U83048	44W83029
27	MOTHERBOARD	T-Z9	422U12402	44W83031
28	GP-IB	T-Z13	442U83054	44W83046
29	RS-232C	(Option 10) T-Z14	442U83056	44W83047

Table 4-5 ME522A (R) Parts List Table

Schematic No.	Circuit Diagram Name	Z No.	PC Board Drawing No.	Parts List No.
30	ME522A RECEIVER	——	——	44W83032
31	INPUT	R-Z1	422U12404	44W83033
32	ERROR DETECTOR	R-Z4	422U12410	44W83036
33	COUNTER	R-Z5	422U12412	44W83037
34	CONTROL	R-Z6	422U12414	44W83038
35	POWER SUPPLY	R-Z7	422U12398	44W83039
36	DISPLAY	R-Z8	422U12418	44W83040
37	50 Ω/75 Ω TRANSDUCER	R-Z9	442U83050	44W83041
38	MOTHERBOARD	R-Z10	432U33434	44W83043
39	SWITCH	R-Z11	442U83052	44W83044
40	PRINTER UNIT	R-Z12	——	44W85802
41	PRINTER INTERFACE	R-Z12 (Z1)	432U34770	44W85804
42	PRINTER CONTROL	R-Z12 (Z2)	442U77432	44W85805
28	GP-IB	R-Z13	442U83054	44W83046
29	RS-232C	(Option 11) R-Z14	442U83056	44W83047

Parts List : ME522A Transmitter 1

CKT REF	DESCRIPTION	RATING		NOTE
F 1	Fuse,(T***A 250V)	T***A, 250V		
F 2	Fuse,(T***A 250V)	T***A, 250V		
G 1	Fan,(109S005UL)			
J 1	Panel jack, (BNC-J757-NI)			
J 2	Panel jack (BNC-PJ2-NI)			
J 3	Panel jack (BNC-PJ-1.5V-CR-NI)			
J 4	Panel jack (BNC-PJ-1.5V-CR-NI)			
J 5	Panel jack (BNC-PJ-1.5V-CR-NI)			
J 6	Panel jack (BNC-J757-NI)			
J 7	Plug,(HRM-208B)			
J 8	Plug,(HRM-208B)			
J 9	Plug,(HRM-208B)			
J10	Plug,(HRM-208B)			
J11	Plug,(MP2.5CLP)			
J12	Plug,(HRM-208B)			
J13	Plug,(27DP-LP-1.5)			
J14	Plug,(27DP-LP-1.5)			
J15	Plug,(27DP-LP-1.5)			
J16	Plug,(MP2.5CLP)			
J17	Plug,(27DP-LP-1.5)			
J18	Plug,(27DP-LP-1.5)			
J19	Plug,(27DP-LP-1.5)			
J20	Plug,(27DP-LP-1.5)			
J21	Plug,(NM11-2F)			
J22	Plug,(NM11-2F)			
J23	Plug,(NM11-2F)			
J24	Plug,(NM11-2F)			
J25	Plug,(HRM-208B)			
J26	Plug,(NM11-2F)			
J27	Plug,(NM11-2F)			
J28	Plug,(NM11-2F)			
J29	Plug,(NM11-2F)			
J30	Plug,(HRM-208B)			
J31	Socket,(DF1-5S2.5R24)			
J32	Socket,(DF1-5S2.5R24)			
J33	Socket,(DF1-2S2.5R24)			

( ): Manufacturer's part number
* : Selected at factory

Parts List : ME522A Transmitter 1

CKT REF	DESCRIPTION	RATING		NOTE
J34	Socket,(DF1-3S2.5R24)			
J35	Socket,(DF1-3S2.5R24)			
J36	Connector, (HIF3BA5B-20D-AA16S)			
J37	Connector, (HIF3BA5B-34D-AA36S)			
J38	Terminal,(A-12)			
J39	Panel jack, (BNC-J757-NI)			
J40	Panel jack, (BNC-J757-NI)			
J41	Panel jack, (BNC-J757-NI)			
J42	Plug,(MP2.5CLP)			
J43	Plug,(MP2.5CLP)			
J44	Plug,(MP2.5CLP)			
J45	Socket,(DF1-2S2.5R24)			
J46	Socket,(DF1-2S2.5R24)			
J47	Socket,(DF1-2S2.5R24)			
Q 1	Rectifier,(S15VB10)			
S 1	Pushbutton, (SDU3P2106)			
T 1	Trans,(44T82581)	308VA		
Z 1	Synthesizer Section			44W38060
Z 2	PATTERN GENERATOR I			44W83023
Z 3	PATTERN GENERATOR II			44W83024
Z 4	OUTPUT			44W83025
Z 5	CONTORL			44W83026
Z 6	POWER SUPPLY			44W83027
Z 7	DISPLAY			44W83028
Z 8	50 Ω/75 Ω TRANSDUCER			44W83029
Z 9	MOTHER BOARD			44W83031
Z10	Not assigned			
Z11	Not assigned			
Z12	Not assigned			
Z13	GP-IB			44W83046

( ): Manufacturer's part number
* : Selected at factory

Parts List : ME522A Transmitter 1

CKT REF	DESCRIPTION	RATING		NOTE
Z14	RS-232C			44W83046
Z15	NOISE FILTER			44W83047 Option 10

( ): Manufacturer's part number
* : Selected at factory

Parts List : T-21 Synthesizer Section 2

CKT REF	DESCRIPTION	RATING		NOTE
C 1	Line Filter, (ZFN5101-01R)	5000pF,50V		U1
C 2	Line Filter, (ZFN5101-01R)	5000pF,50V		U1
C 3	Line Filter, (ZFN5101-01R)	5000pF,50V		U1
C 4	Line Filter, (ZFN5101-01R)	5000pF,50V		U1
C 5	Line Filter, (ZFN5101-01R)	5000pF,50V		U1
C 6	Line Filter (ZFN5101-01R)	5000pF,50V		U1
C 7	Line Filter, (ZFN5101-01R)	5000pF,50V		U1
C 8	Line Filter, (ZFN5101-01R)	5000pF,50V		U1
C 9	Line Filter, (ZFN5101-01R)	5000pF,50V		U1
C10	Cer,(DF553F102PY50)	1000pF,+100/-0%,50V		U1
C11	Cer,(DF553F102PY50)	1000pF,+100/-0%,50V		U1
C12	Cer,(DF553F102PY50)	1000pF,+100/-0%,50V		U1
C13	Cer,(DF553F102PY50)	1000pF,+100/-0%,50V		U1
C14	Cer,(DF553F102PY50)	1000pF,+100/-0%,50V		U1
C15	Cer,(DF553F102PY50)	1000pF,+100/-0%,50V		U1
C16	Cer,(DF553YN680KY50)	68pF, 10%,50V		U1
C17	Cer,(DF553YN680KY50)	68pF, 10%,50V		U1
C18	Cer,(DF553YN680KY50)	68pF, 10%,50V		U1
C19	Line Filter, (ZFN5101-01R)	5000pF,50V		U2
C20	Line Filter, (ZFN5101-01R)	5000pF,50V		U2
C21	Line Filter, (ZFN5101-01R)	5000pF,50V		U2
C22	Line Filter, (ZFN5101-01R)	5000pF,50V		U2
C23	Line Filter, (ZFN5101-01R)	5000pF,50V		U2
C24	Line Filter, (ZFN5101-01R)	5000pF,50V		U2
C25	Line Filter, (ZFN5101-01R)	5000pF,50V		U2
C26	Line Filter, (ZFN5101-01R)	5000pF,50V		U2
C27	Line Filter, (ZFN5101-01R)	5000pF,50V		U2
C28	Line Filter, (ZFN5101-01R)	5000pF,50V		U2

( ): Manufacturer's part number
* : Selected at factory

Parts List : T-Z1 Synthesizer Section 2

CKT REF	DESCRIPTION	RATING	NOTE
C29	Cer,(DF553F102PY50)	1000pF,50V	U2
C30	Cer,(DF553F102PY50)	1000pF,50V	U2
C31	Cer,(DF553F102PY50)	1000pF,50V	U2
C32	Cer,(DF553F102PY50)	1000pF,50V	U2
C33	Cer,(DF553F102PY50)	1000pF,50V	U2
C34	Cer,(DF553F102PY50)	1000pF,50V	U2
J 1	Receptacle, (HRM-100-32S)		U1
J 2	Receptacle, (HRM-100-32S)		U1
J 3	Panel jack, (MP2.5C-PJ)		U1
J 4	Receptacle, (HRM-100-32S)		U1
J 5	Receptacle, (HRM-100-32S)		U1
J 6	Receptacle, (HRM-100-32S)		U1
J 7	Receptacle, (HRM-100-32S)		U1
J 8	Plug,(MP2.5C-LP)		U1
J 9	Plug,(AX-303-3)		U1
J10	Plug,(AX-303-3)		U1
J11	Plug,(AX-303-3)		U1
J12	Plug,(AX-303-3)		U1
J13	Socket, (DF1-10S2.5R24)		U1
J14	Not assigned		
J15	Not assigned		
J16	Not assigned		
J17	Not assigned		
J18	Not assigned		
J19	Not assigned		
J20	Not assigned		
J21	Socket, (DF1-15S2.5R24)		U2
J22	Socket, (DF1-2S2.5R28)		U2
J23	Socket, (DF1-3S2.5R28)		U2
J24	Socket, (DF1-8S2.5R28)		U2
J25	Socket, (DF1-8S2.5R28)		U2

( ) : Manufacturer's part number
* : Selected at factory

Parts List : T-Z1 Synthesizer Section 2

CKT REF	DESCRIPTION	RATING	NOTE
J25	Socket, (DF1-8S2.5R28)		U2
J26	Socket, (DF1-8S2.5R28)		U2
J27	Socket, (DF1-8S2.5R28)		U2
J28	Socket, (DF1-8S2.5R28)		U2
J29	Socket, (DF1-8S2.5R28)		U2
J30	Socket, (DF1-2S2.5R28)		U2
J31	Socket, (DF1-3S2.5R28)		U2
J32	Socket, (DF1-8S2.5R28)		U2
J33	Socket, (DF1-8S2.5R28)		U2
J34	Socket, (DF1-8S2.5R28)		U2
J35	Socket, (DF1-8S2.5R28)		U2
J36	Socket, (DF1-8S2.5R28)		U2
J37	Not assigned		
J38	Receptacle, (HRM-100-32S)		U2
J39	Receptacle, (HRM-100-32S)		U2
J40	Receptacle, (HRM-100-32S)		U2
J41	Plug,(HRM-208B)		U2
J42	Plug,(HRM-208B)		U2
J43	Plug,(HRM-208B)		U2
J44	Plug,(HRM-208B)		U2
J45	Plug,(HRM-208B)		U2
J46	Plug,(HRM-208B)		U2
Z 1	10 MHz		U1 44W83061
Z 2	100 MHz		U1 44W83062
Z 3	100 MHz X N		U1 44W83063
Z 4	OUTPUT DIVIDER		U1 44W83064
Z 5	U1 SIGNAL SUPPLY		U1 44W83065
Z 6	REFERENCE SIGNAL BRANCH		U2 44W83067

( ) : Manufacturer's part number
* : Selected at factory

Parts List : T-Z1 Synthesizer Section 2

CKT REF	DESCRIPTION	RATING	NOTE
Z 7	10 kHz/1 MHz LOOP		U2 44W83068
Z 8	100 MHz LOOP		U2 44W83069
Z 9	100 MHz VCO		U2 44W83070
Z10	10 MHz LOOP		U2 44W83071
Z11	10 MHz/20 MHz DOUBLER		U2 44W83072
Z12	MAIN LOOP		U2 44W83073
Z13	MAIN VCO		U2 44W83074
Z14	MAIN MIX 1		U2 44W83075
Z15	MAIN MIX 2		U2 44W83076
Z16	U2 MOTHER BOARD		U2 44W83077
Z17	U2 SIGNAL SUPPLY		U2 44W83078

( ) : Manufacturer's part number
* : Selected at factory

Parts List : T-Z1(Z1) 10 MHz (U1) 3

CKT REF	DESCRIPTION	RATING	NOTE
C 1	Cer,(CK732B1H103K)	0.01μF,±10%,50V	
C 2	Cer,(CK732B1H103K)	0.01μF,±10%,50V	
C 3	Not assigned		
C 4	Not assigned		
C 5	Not assigned		
C 6	Not assigned		
C 7	Elect,(CE04W1V100)	10μF,±20%,50V	
C 8	Cer,(CK924C1H103M)	0.01μF,±20%,50V	
C 9	Not assigned		
C10	Not assigned		
C11	Elect,(CE04W1V100)	10μF,±20%,35V	
C12	Cer,(CK824C1H103M)	0.01μF,±20%,50V	
C13	Not assigned		
C14	Not assigned		
C15	Cer,(CK924C1H103M)	0.01μF,±20%,50V	
C16	Elect,(CE04W1V100)	10μF,±20%,35V	
C17	Elect,(CE04W1V100)	10μF,±20%,35V	
C18	Cer,(CK924C1H103M)	0.01μF,±20%,50V	
C19	Not assigned		
C20	Not assigned		
C21	Cer,(CK45B1H102KY)	1000pF,±10%,50V	
C22	Not assigned		
C23	Not assigned		
C24	Not assigned		
C25	Not assigned		
C26	Not assigned		
C27	Not assigned		
C28	Elect,(CE04W1V100)	10μF,±20%,35V	
C29	Not assigned		
C30	Cer,(CK924C1H103M)	0.01μF,±20%,50V	
C31	Cer,(CK924F1H104Z)	0.1μF,+80/-20%,50V	
C32	Cer,(CK924F1H104Z)	0.1μF,+80/-20%,50V	
C33	Cer,(CC45CK1H010CY)	1pF,±0.25pF,50V	
C34	Cer,(CC45CH1H150JY)	15pF,±5%,50V	
C35	Cer,(CC45CH1H330JY)	33pF,±5%,50V	
C36	Cer,(CK924F1H104Z)	0.1μF,+80/-20%,50V	
L 1	Not assigned		
L 2	Not assigned		
L 3	Coil,(LF8-100K)	10μH	
L 4	Not assigned		
L 5	Coil,(LF8-100K)	10μH	
L 6	Not assigned		
L 7	Coil,(LF8-100K)	10μH	

( ) : Manufacturer's part number
* : Selected at factory

Parts List : T-Z1(Z1) 10 MHz (U1) 3

CKT REF	DESCRIPTION	RATING		NOTE
L 8	Not assigned			
L 9	Not assigned			
L10	Coil,(34L55686C)	0.158μH		
Q 1	IC,(74F00PC)			
Q 2	Not assigned			
Q 3	Not assigned			
Q 4	Not assigned			
Q 5	Not assigned			
Q 6	Not assigned			
Q 7	Not assigned			
Q 8	Tr,(2SC2369)			
Q 9	Tr,(2SC2369)			
R 1	CF,(ARD25T472J)	4.7kΩ,±5%,1/4W		
R 2	Not assigned			
R 3	Not assigned			
R 4	Not assigned			
R 5	CF,(ARD25T271J)	270Ω,±5%,1/4W		
R 6	Not assigned			
R 7	Not assigned			
R 8	Not assigned			
R 9	Not assigned			
R10	CF,(ARD25T103J)	10kΩ,±5%,1/4W		
R11	CF,(ARD25T103J)	10kΩ,±5%,1/4W		
R12	CF,(ARD25T510J)	51Ω,±5%,1/4W		
R13	CF,(ARD25T221J)	220Ω,±5%,1/4W		
R14	CF,(ARD25T103J)	10kΩ,±5%,1/4W		
R15	CF,(ARD25T103J)	10kΩ,±5%,1/4W		
R16	CF,(ARD25T101J)	100Ω,±5%,1/4W		
R17	CF,(ARD25T470J)	47Ω,±5%,1/4W		
R18	CF,(ARD25T331J)	330Ω,±5%,1/4W		
R19	CF,(ARD25T101J)	100Ω,±5%,1/4W		
R20	Var,MF,(RJ-6P 5kΩ)	5kΩ,1/2W		
Z 1	XTAL OSC,(NSA0118A)	10MHz		

( ): Manufacturer's part number
* : Selected at factory

44W83061 2/2

Parts List : T-Z1(Z2) 100 MHz (U1) 4

CKT REF	DESCRIPTION	RATING		NOTE
C 1	Cer,(CK732B1H103K)	0.01μF,±10%,50V		
C 2	Elect,(CE04W1V100)	10μF,±20%,35V		
C 3	Elect,(CE04W1V100)	10μF,±20%,35V		
C 4	Cer,(CK732B1H103K)	0.01μF,±10%,50V		
C 5	Elect,(CE04W1V100)	10μF,±20%,35V		
C 6	Elect,(CE04W1V100)	10μF,±20%,35V		
C 7	Cer,(CK732B1H103K)	0.01μF,±10%,50V		
C 8	Elect,(CE04W1V100)	10μF,±20%,35V		
C 9	Elect,(CE04W1V100)	10μF,±20%,35V		
C10	Not assigned			
C11	Not assigned			
C12	Not assigned			
C13	Elect,(CE04W1V100)	10μF,±20%,35V		
C14	Not assigned			
C15	Elect,(CE04W1E101)	100μF,+20%,25V		
C16	Elect,(CE04W1E101)	100μF,+20%,25V		
C17	Not assigned			
C18	Not assigned			
C19	Not assigned			
C20	Not assigned			
C21	Cer,(CK732B1H103K)	0.01μF, 10%,50V		
C22	Elect,(CE04W1V100)	10μF,±20%,35V		
C23	Cer,(CK45B1H102KY)	1000pF,±10%,50V		
C24	Cer,(CK732B1H103K)	0.01 F,±10%,50V		
C25	Cer,(CK45B1H102KY)	1000pF,±10%,50V		
C26	Not assigned			
C27	Not assigned			
C28	Not assigned			
C29	Not assigned			
C30	Not assigned			
C31	Cer,(CK45B1H102KY)	1000pF,±10%,50V		
C32	Cer,(CK732B1H103K)	0.01μF,±10%,50V		
C33	Cer,(CK45B1H102KY)	1000pF,±10%,50V		
C34	Cer,(CK732B1H103K)	0.01μF,±10%,50V		
C35	Cer,(CK732B1H102K)	1000pF,±10%,50V		
C36	Cer,(CC924CH1H910J)	91pF,+5%,50V		
C37	Not assigned			
C38	Not assigned			
C40	Cer,(CK45B1H102KY)	1000pF,±10%,50V		
L 1	Coil,(LF8-100K)	10μH		
L 2	Coil,(LF8-100K)	10μH		
L 3	Coil,(LF8-100K)	10μH		
L 4	Not assigned			
L 5	Beads core,(34T55682)			

( ): Manufacturer's part number
* : Selected at factory

44W83062 1/2

Parts List : T-Z1(Z2) 100 MHz (U1) 4

CKT REF	DESCRIPTION	RATING		NOTE
L 6	Not assigned			
L 7	Not assigned			
L 8	Not assigned			
L 9	Not assigned			
L10	Coil,(34L74430K)	14nH		
Q 1	IC,(NJM5534DD)			
Q 2	Not assigned			
Q 3	Not assigned			
Q 4	IC,(μPC1654A)			
Q 5	IC,(μPC1654A)			
Q 6	IC,(MWA130)			
Q 7	Di,(1S1855)			
Q 8	Not assigned			
Q 9	Not assigned			
Q10	Di,(1S953)			
Q11	Di,(1S953)			
R 1	CF,(ARD25T102J)	1kΩ,±5%,1/4W		
R 2	CF,(ARD25T102J)	1kΩ,±5%,1/4W		
R 3	CF,(ARD25T472J)	4.7kΩ,±5%,1/4W		
R 4	CF,(ARD25T182J)	1.8kΩ,±5%,1/4W		
R 5	CF,(ARD25T333J)	33kΩ,±5%,1/4W		
R 6	CF,(ARD25T333J)	33kΩ,±5%,1/4W		
R 7	CF,(ARD25T102J)	1kΩ,±5%,1/4W		
R 8	CF,(ARD25T103J)	10kΩ,±5%,1/4W		
R 9	CF,(ARD25T101J)	100Ω,±5%,1/4W		
R10	CF,(ARD25T101J)	100Ω,±5%,1/4W		
R11	CF,(ARD25T221J)	220Ω,±5%,1/4W		
R12	CF,(ARD25T680J)	68Ω,±5%,1/4W		
R13	CF,(ARD25T470J)	47Ω,±5%,1/4W		
R14	Not assigned			
R15	CF,(ARD25T470J)	47Ω,±5%,1/4W		
R16	Not assigned			
R17	CF,(ARD25T470J)	47Ω,±5%,1/4W		
T 1	Trans,(342T74421)			
Z 1	Mixer,(M8)			
Z 2	XTAL OSC,(TCO 205G)	100MHz		

( ): Manufacturer's part number
* : Selected at factory

44W83062 2/2

Parts List : T-Z1(Z3) 100 MHz X N (U1) 5

CKT REF	DESCRIPTION	RATING		NOTE
C 1	Cer,(CK45B1H102KY)	1000pF,±10%,50V		
C 2	Cer,(CK45B1H102KY)	1000pF,±10%,50V		
C 3	Cer,(CK45B1H102KY)	1000pF,±10%,50V		
C 4	Cer,(CK45B1H102KY)	1000pF,±10%,50V		
C 5	Cer,(CK45B1H102KY)	1000pF,±10%,50V		
C 6	Cer,(CK45B1H102KY)	1000pF,±10%,50V		
C 7	Cer,(CK45B1H102KY)	1000pF,±10%,50V		
C 8	Cer,(CK45B1H102KY)	1000pF,±10%,50V		
C 9	Cer,(CK45B1H102KY)	1000pF,±10%,50V		
C10 to C21	Cer,(CK732B1H103K)	0.01μF,±10%,50V		
C22	Cer,(CK45B1H102KY)	1000pF,±10%,50V		
C23	Not assigned			
C24	Not assigned			
C25	Not assigned			
C26	Elect,(CE04W1E101)	100μF,±20%,25V		
C27	Elect,(CE04W1E101)	100μF,±20%,25V		
C28	Not assigned			
C29	Not assigned			
C30	Cer,(CK45B1H102KY)	1000pF,±10%,50V		
C31	Cer,(CC732CK1H020C)	2pF,±0.25pF,50V		
L 1	Beads core,(34T55682)			
L 2	Coil,(LF8-221K)	220μH		
L 3	Not assigned			
L 4	Beads core,(34T55682)			
Q 1 to Q21	Silicon PIN diode, (1SV34)			
Q22	IC,(MC74HC595)			
Q23	IC,(MC74HC14)			
R 1	MF,(RM73B2B122JD)	1.2kΩ,±5%,1/8W		
R 2	MF,(RM73B2B122JD)	1.2kΩ,±5%,1/8W		
R 3	MF,(RM73B2B122JD)	1.2kΩ,±5%,1/8W		
R 4	MF,(RM73B2B122JD)	1.2kΩ,±5%,1/8W		
R 5	MF,(RM73B2B122JD)	1.2kΩ,±5%,1/8W		
R 6	MF,(RM73B2B122JD)	1.2kΩ,±5%,1/8W		
R 7	CF,(ARD25T122J)	1.2kΩ,±5%,1/4W		
R 8	CF,(ARD25T122J)	1.2kΩ,±5%,1/4W		
R 9	CF,(ARD25T122J)	1.2kΩ,±5%,1/4W		
R10	CF,(ARD25T122J)	1.2kΩ,±5%,1/4W		

( ): Manufacturer's part number
* : Selected at factory

44W83063 1/2

Parts List : T-Z1(Z3) 100 MHz X N (U1) 5

CKT REF	DESCRIPTION	RATING		NOTE
R11	CF,(ARD25T122J)	1.2kΩ,±5%,1/4W		
R12	CF,(ARD25T122J)	1.2kΩ,±5%,1/4W		
R13	CF,(ARD25T122J)	1.2kΩ,±5%,1/4W		
R14	MF,(RM73B2B122JD)	1.2kΩ,±5%,1/8W		
R15	CF,(ARD25T103J)	10kΩ,±5%,1/4W		
Z 1	Filter,(34Z86128)	900MHz		
Z 2	Filter,(34Z86127)	800MHz		
Z 3	Filter,(34Z86126)	700MHz		
Z 4	Filter,(34Z86125)	600MHz		
Z 5	Filter,(34Z86124)	500MHz		
Z 6	Filter,(34Z86123)	400MHz		
Z 7	Filter,(34Z86122)	300MHz		

( ) : Manufacturer's part number
* : Selected at factory

Parts List : T-Z1(Z4) OUTPUT DIVIDER (U1) 6

CKT REF	DESCRIPTION	RATING		NOTE
AT1	Att,R,(AT-806)	6dB		
C 1	Cer,(CK732B1H103K)	0.01μF, 10%,50V		
C 2	Cer,(CK924F1H104Z)	0.1μF,+80/-20%,50V		
C 3	Not assigned			
C 4	Cer,(CK732B1H103K)	0.01μF, 10%,50V		
C 5	Cer,(CK924F1H104Z)	0.1μF,+80/-20%,50V		
C 6	Cer,(CK924F1H104Z)	0.1μF,+80/-20%,50V		
C 7	Cer,(CK924F1H104Z)	0.1μF,+80/-20%,50V		
C 8	Cer,(CK924C1H103M)	0.01μF, 20%,50V		
C 9	Cer,(CK924F1H104Z)	0.1μF,+80/-20%,50V		
C10	Cer,(CK924F1H104Z)	0.1μF,+80/-20%,50V		
C11	Cer,(CK924F1H104Z)	0.1μF,+80/-20%,50V		
C12	Cer,(CK924C1H103M)	0.01μF, 20%,50V		
C13	Cer,(CK924C1H103M)	0.01μF, 20%,50V		
C14	Cer,(CK924F1H104Z)	0.1μF,+80/-20%,50V		
C15	Cer,(CK924F1H104Z)	0.1μF,+80/-20%,50V		
C16	Cer,(CK924F1H104Z)	0.1μF,+80/-20%,50V		
C17	Cer,(CK924F1H104Z)	0.1μF,+80/-20%,50V		
C18	Cer,(CK924F1H104Z)	0.1μF,+80/-20%,50V		
C19	Cer,(CK924F1H104Z)	0.1μF,+80/-20%,50V		
C20	Not assigned			
C21	Cer,(CK924F1H104Z)	0.1μF,+80/-20%,50V		
C22	Cer,(CK924F1H104Z)	0.1μF,+80/-20%,50V		
C23	Cer,(CK924F1H104Z)	0.1μF,+80/-20%,50V		
C24	Cer,(CK924F1H104Z)	0.1μF,+80/-20%,50V		
C25	Elect,(CE04W1E470)	47μF,±20%,25V		
C26	Cer,(CK924F1H104Z)	0.1μF,+80/-20%,50V		
C27	Cer,(CK924F1H104Z)	0.1μF,+80/-20%,50V		
C28	Cer,(CK924F1H104Z)	0.1μF,+80/-20%,50V		
C29	Cer,(CK924F1H104Z)	0.1μF,+80/-20%,50V		
C30	Cer,(CK924F1H104Z)	0.1μF,+80/-20%,50V		
C31	Cer,(CK924F1H104Z)	0.1μF,+80/-20%,50V		
C32	Cer,(CK924F1H104Z)	0.1μF,+80/-20%,50V		
C33	Cer,(CK924F1H104Z)	0.1μF,+80/-20%,50V		
C34	Cer,(CK924F1H104Z)	0.1μF,+80/-20%,50V		
C35	Cer,(CK924C1H103M)	0.01μF, 20%,50V		
C36	Cer,(CK924F1H104Z)	0.1μF,+80/-20%,50V		
C37	Cer,(CK924F1H104Z)	0.1μF,+80/-20%,50V		
C38	Cer,(CK924F1H104Z)	0.1μF,+80/-20%,50V		
C39	Cer,(CK924C1H103M)	0.01μF, 20%,50V		
C40	Not assigned			
C41	Cer,(CK924F1H104Z)	0.1μF,+80/-20%,50V		
C42	Cer,(CK924F1H104Z)	0.1μF,+80/-20%,50V		
C43	Cer,(CK924F1H104Z)	0.1μF,+80/-20%,50V		
C44	Not assigned			
C45	Not assigned			

( ) : Manufacturer's part number
* : Selected at factory

Parts List : T-Z1(Z4) OUTPUT DIVIDER (U1) 6

CKT REF	DESCRIPTION	RATING		NOTE
C46	Cer,(CK924F1H104Z)	0.1μF,+80/-20%,50V		
C47	Cer,(CK924F1H104Z)	0.1μF,+80/-20%,50V		
C48	Cer,(CK924F1H104Z)	0.1μF,+80/-20%,50V		
C49	Cer,(CK924F1H104Z)	0.1μF,+80/-20%,50V		
C50	Not assigned			
C51	Cer,(CK924C1H103M)	0.01μF,±20%,50V		
C52	Cer,(CK732B1H103K)	0.01μF,±10%,50V		
C53	Cer,(CK924F1H104Z)	0.1μF,+80/-20%,50V		
C54	Elect,(CE04C1C330)	33μF,±20%,16V		
C55	Cer,(CK924F1H104Z)	0.1μF,+80/-20%,50V		
C56	Cer,(CK924C1H10M)	0.1μF,±20%,50V		
C57	Cer,(CK732B1H103K)	0.01μF,±10%,50V		
C58	Cer,(CK732B1H103K)	0.01μF,±10%,50V		
C59	Cer,(CK924F1H104Z)	0.1μF,+80/-20%,50V		
C60	Cer,(CK924F1H104Z)	0.1μF,+80/-20%,50V		
C61	Elect,(CE04W1E470)	47μF,±20%,50V		
C62	Cer,(CK924F1H104Z)	0.1μF,+80/-20%,50V		
C63	Cer,(CK924F1H104Z)	0.1μF,+80/-20%,50V		
C64	Cer,(CK924F1H104Z)	0.1μF,+80/-20%,50V		
C65	Cer,(CK924F1H104Z)	0.1μF,+80/-20%,50V		
C66	Cer,(CK924F1H104Z)	0.1μF,+80/-20%,50V		
C67	Cer,(CK924F1H104Z)	0.1μF,+80/-20%,50V		
C68	Cer,(CK924F1H104Z)	0.1μF,+80/-20%,50V		
C69	Not assigned			
C70	Cer,(CK924F1H104Z)	0.1μF,+80/-20%,50V		
C71	Cer,(CK924F1H104Z)	0.1μF,+80/-20%,50V		
C72	Elect,(CE04W1E101)	100μF,±20%,25V		
C73	Elect,(CE04W1E101)	100μF,±20%,25V		
C74	Elect,(CE04W1E101)	100μF,±20%,25V		
C75	Cer,(CK924F1H104Z)	0.1μF,+80/-20%,50V		
C76	Cer,(CK924F1H104Z)	0.1μF,+80/-20%,50V		
C77	Elect,(CE04W1E470)	47μF,±20%,25V		
C78	Elect,(CE04W1E470)	47μF,±20%,25V		
C79	Cer,(RPE114C105M50V)	1μF,±20%,50V		
J 1	Plug,(DF1-10P2.5DSA)			
J 2	Receptacle, (HRM-301B)			
J 3	Receptacle, (MP-2.5CR-PC)			
J 4	Receptacle, (HRM-301B)			
J 5	Receptacle, (HRM-301B)			

( ): Manufacturer's part number
* : Selected at factory

Parts List : T-Z1(Z4) OUTPUT DIVIDER (U1) 6

CKT REF	DESCRIPTION	RATING		NOTE
J 6	Receptacle, (HRM-301B)			
K 1	Relay,(SZ-2103)			
K 2	Not assigned			
K 3	Relay,(G5Y-154P(12V))			
K 4	Relay,(SZ-2103)			
L 1	Microinductor, (LF8-100)	10μH		
L 2	Microinductor, (LF8-100)	10μH		
L 3	Microinductor, (LF8-100)	10μH		
Q 1	IC,(μPC1654A)			
Q 2	Not assigned			
Q 3	IC,(μPA102G)			
Q 4	Di,(1S953)			
Q 5	IC,(μPB581C)			
Q 6	Tr,(2SC3358)			
Q 7	Tr,(2SC3358)			
Q 8	IC,(μPA104G)			
Q 9	IC,(HD10104)			
Q10	IC,(MC74BC14)			
Q11	IC,(SP9131)			
Q12	IC,(HD10131)			
Q13	IC,(SP16F60)			
Q14	IC,(MC10H105L)			
Q15	IC,(MC74BC595)			
Q16	IC,(HD10124)			
Q17	IC,(HD10124)			
Q18	IC,(HD75451AP)			
Q19	IC,(MC10H102L)			
Q20	IC,(MC10138L)			
Q21	Di,(1S953)			
Q22	Tr,(2SC3358)			
Q23	Di,(1S953)			
Q24	Di,(1S953)			
Q25	Di,(1S953)			
Q26	IC,(μPA104G)			
Q27	Tr,(2SC3358)			
Q28	IC,(μPA102G)			

( ): Manufacturer's part number
* : Selected at factory

Parts List : T-Z1(Z4) OUTPUT DIVIDER (U1) 6

CKT REF	DESCRIPTION	RATING		NOTE
Q29	Tr,(2SC3358)			
Q30	Di,(1S953)			
Q31	IC,(μPA102G)			
Q32	Not assigned			
Q33	Tr,(2SA1151)			
Q34	Tr,(2SC3358)			
Q35	Tr,(2SC3358)			
Q36	Tr,(2SC3358)			
Q37	Tr,(2SC3358)			
Q38	Di,(ND587T-3R)			
Q39	Di,(1S953)			
Q40	Not assigned			
Q41	IC,(μPC251C)			
Q42	FET,(MGF1303GaAs)			
Q43	FET,(MGF1303GaAs)			
Q44	Not assigned			
Q45	Tr,(2SC3358)			
Q46	Tr,(2SC3358)			
Q47	Di,(1S953)			
Q48	Di,(1S953)			
R 1	Not assigned			
R 2	Not assigned			
R 3	Not assigned			
R 4	Not assigned			
R 5	CF,(ERD10TJ102A)	1kΩ,±5%,1/8W		
R 6	CF,(ERD10TJ152A)	1.5kΩ,±5%,1/8W		
R 7	Var,MF,(RJ-6P 2kΩ)	2kΩ,1/2W		
R 8	CF,(ERD10TJ * A)	1k to 1MΩ,±5%,1/8W		Q'ty 0 to 3, *
R 9	CF,(ERD10TJ331A)	330Ω,±5%,1/8W		
R10	Not assigned			
R11	CF,(ERD10TJ821A)	820Ω,±5%,1/8W		
R12	CF,(ERD10TJ * A)	10 to 100Ω,±5%,1/8W		*
R13	CF,(ERD10TJ * A)	10 to 100Ω,±5%,1/8W		*
R14	CF,(ERD10TJ510A)	51Ω,±5%,1/8W		
R15	CF,(ERD10TJ510A)	51Ω,±5%,1/8W		
R16	CF,(ERD10TJ101A)	100Ω,±5%,1/8W		
R17	CF,(ERD10TJ151A)	150Ω,±5%,1/8W		
R18	CF,(ERD10TJ331A)	330Ω,±5%,1/8W		
R19	CF,(ERD10TJ391A)	390Ω,±5%,1/8W		
R20	Not assigned			
R21	CF,(ERD10TJ333A)	33kΩ,±5%,1/8W		
R22	CF,(ERD10TJ221A)	220Ω,±5%,1/8W		

( ): Manufacturer's part number

* : Selected at factory

Parts List : T-Z1(Z4) OUTPUT DIVIDER (U1) 6

CKT REF	DESCRIPTION	RATING		NOTE
R23	CF,(ERD10TJ221A)	220Ω,±5%,1/8W		
R24	CF,(ERD10TJ * A)	10 to 100Ω,±5%,1/8W		*
R25	CF,(ERD10TJ * A)	10 to 100Ω,±5%,1/8W		*
R26	CF,(ERD10TJ510A)	51Ω,±5%,1/8W		
R27	CF,(ERD10TJ510A)	51Ω,±5%,1/8W		
R28	CF,(ERD10TJ *)	1k to 1MΩ,±5%,1/8W		Q'ty 0 to 3, *
R29	CF,(ERD10TJ331A)	330Ω,±5%,1/8W		
R30	Not assigned			
R31	CF,(ERD10TJ102A)	1kΩ,±5%,1/8W		
R32	CF,(ERD10TJ * A)	10 to 100Ω,±5%,1/8W		*
R33	CF,(ERD10TJ * A)	10 to 100Ω,±5%,1/8W		*
R34	CF,(ERD10TJ101A)	100Ω,±5%,1/8W		
R35	CF,(ERD10TJ151A)	150Ω,±5%,1/8W		
R36	Not assigned			
R37	CF,(ARD25T331J)	330Ω,±5%,1/4W		
R38	CF,(ERD10TJ820A)	82Ω,±5%,1/8W		
R39	CF,(ARD25T131J)	130Ω,±5%,1/4W		
R40	Not assigned			
R41	CF,(ERD10TJ * A)	10 to 100Ω,±5%,1/8W		*
R42	CF,(ERD10TJ * A)	10 to 100Ω,±5%,1/8W		*
R43	CF,(ERD10TJ151A)	150Ω,±5%,1/8W		
R44	CF,(ERD10TJ510A)	51Ω,±5%,1/8W		
R45	CF,(ERD10TJ510A)	51Ω,±5%,1/8W		
R46	CF,(ERD10TJ * A)	10 to 100Ω,±5%,1/8W		*
R47	CF,(ERD10TJ101A)	100Ω,±5%,1/8W		
R48	CF,(ERD10TJ510A)	51Ω,±5%,1/8W		
R49	Single in-line array, (IHR-4-103JA)	10kΩ x 4,1/8W		
R50	Not assigned			
R51	CF,(ERD10TJ222A)	2.2kΩ,±5%,1/8W		
R52	CF,(ERD10TJ222A)	2.2kΩ,±5%,1/8W		
R53	CF,(ERD10TJ222A)	2.2kΩ,±5%,1/8W		
R54	CF,(ERD10TJ222A)	2.2kΩ,±5%,1/8W		
R55	CF,(ERD10TJ222A)	2.2kΩ,±5%,1/8W		
R56	CF,(ERD10TJ222A)	2.2kΩ,±5%,1/8W		
R57	CF,(ERD10TJ222A)	2.2kΩ,±5%,1/8W		
R58	CF,(ERD10TJ471J)	470Ω,±5%,1/8W		
R59	CF,(ERD10TJ222A)	2.2kΩ,±5%,1/8W		
R60	Not assigned			
R61	CF,(ERD10TJ471A)	470Ω,±5%,1/8W		
R62	CF,(ERD10TJ222A)	2.2kΩ,±5%,1/8W		
R63	CF,(ERD10TJ222A)	2.2kΩ,±5%,1/8W		
R64	CF,(ERD10TJ222A)	2.2kΩ,±5%,1/8W		
R65	CF,(ARD25T131J)	130Ω,±5%,1/4W		

( ): Manufacturer's part number

* : Selected at factory

Parts List : T-Z1(Z4) OUTPUT DIVIDER (U1) 6

CKT REF	DESCRIPTION	RATING		NOTE
R66	CF,(ERD10TJ820A)	82Ω,±5%,1/8W		
R67	CF,(ERD10TJ820A)	82Ω,±5%,1/8W		
R68	CF,(ARD25T131J)	130Ω,±5%,1/4W		
R69	CF,(ARD25T131J)	130Ω,±5%,1/4W		
R70	CF,(ERD10TJ471A)	470Ω,±5%,1/8W		
R71	CF,(ERD10TJ820A)	82Ω,±5%,1/8W		
R72	CF,(ERD10TJ181A)	180Ω,±5%,1/8W		
R73	CF,(ERD10TJ471A)	470Ω,±5%,1/8W		
R74	CF,(ERD10TJ471A)	470Ω,±5%,1/8W		
R75	CF,(ERD10TJ471A)	470Ω,±5%,1/8W		
R76	CF,(ARD25T331J)	330Ω,±5%,1/4W		
R77	CF,(ARD25T131J)	130Ω,±5%,1/4W		
R78	CF,(ERD10TJ820A)	82Ω,±5%,1/8W		
R79	CF,(ERD10TJ510A)	51Ω,±5%,1/8W		
R80	CF,(ERD10TJ471A)	470Ω,±5%,1/8W		
R81	CF,(ERD10TJ * A)	10 to 100Ω,±5%,1/8W		*
R82	CF,(ERD10TJ * A)	10 to 100Ω,±5%,1/8W		*
R83	CF,(ERD10TJ151A)	150Ω,±5%,1/8W		
R84	CF,(ERD10TJ333A)	33kΩ,±5%,1/8W		
R85	CF,(ERD10TJ391A)	390Ω,±5%,1/8W		
R86	CF,(ERD10TJ331A)	330Ω,±5%,1/8W		
R87	CF,(ERD10TJ221A)	220Ω,±5%,1/8W		
R88	CF,(ERD10TJ * A)	1k to 1MΩ,±5%,1/8W		Q'ty 0 to 3, *
R89	CF,(ERD10TJ102A)	1kΩ,±5%,1/8W		
R90	CF,(ERD10TJ101A)	100Ω,±5%,1/8W		
R91	MF,(NRN1/4C4 75.0ΩD)	75.0Ω,±0.5%,1/4W		
R92	CF,(ERD10TJ122A)	1.2kΩ,±5%,1/8W		
R93	CF,(ERD10TJ * A)	10 to 150Ω,±5%,1/8W		*
R94	CF,(ERD10TJ682A)	6.8kΩ,±5%,1/8W		
R95	Var,MF,(RJ-6P 5kΩ)	5kΩ,1/2W		
R96	CF,(ERD10TJ510A)	51Ω,±5%,1/8W		
R97	CF,(ARD25T271J)	270Ω,±5%,1/4W		
R98	CF,(ERD10TJ * A)	10 to 100Ω,±5%,1/8W		*
R99	CF,(ERD10TJ * A)	10 to 100Ω,±5%,1/8W		*
R100	CF,(ERD10TJ121A)	120Ω,±5%,1/8W		
R101	CF,(ERD10TJ510A)	51Ω,±5%,1/8W		
R102	CF,(ERD10TJ151A)	150Ω,±5%,1/8W		
R103	CF,(ERD10TJ750A)	75Ω,±5%,1/8W		
R104	CF,(ERD10TJ * A)	10 to 100Ω,±5%,1/8W		*
R105	CF,(ERD10TJ510A)	51Ω,±5%,1/8W		
R106	CF,(ERD10TJ331A)	330Ω,±5%,1/8W		
R107	CF,(ERD10TJ681A)	680Ω,±5%,1/8W		
R108	CF,(ERD10TJ182A)	1.8kΩ,±5%,1/8W		
R109	CF,(ERD10TJ271A)	270Ω,±5%,1/8W		
R110	CF,(ERD10TJ122A)	1.2kΩ,±5%,1/8W		

( ): Manufacturer's part number

* : Selected at factory

Parts List : T-Z1(Z4) OUTPUT DIVIDER (U1) 6

CKT REF	DESCRIPTION	RATING		NOTE
R111	Not assigned			
R112	CF,(ERD10TJ510A)	51Ω,±5%,1/8W		
R113	CF,(ERD10TJ510A)	51Ω,±5%,1/8W		
R114	CF,(ERD10TJ * A)	10 to 100Ω,±5%,1/8W		*
R115	CF,(ERD10TJ * A)	10 to 100Ω,±5%,1/8W		*
R116	Not assigned			
R117	Not assigned			
R118	CF,(ERD10TJ151A)	150Ω,±5%,1/8W		
R119	CF,(ERD10TJ750A)	75Ω,±5%,1/8W		
R120	Not assigned			
R121	CF,(ERD10TJ331A)	330Ω,±5%,1/8W		
R122	CF,(ERD10TJ331A)	330Ω,±5%,1/8W		
R123	CF,(ERD10TJ510A)	51Ω,±5%,1/8W		
R124	CF,(ERD10TJ510A)	51Ω,±5%,1/8W		
R125	CF,(ERD10TJ * A)	10 to 100Ω,±5%,1/8W		*
R126	CF,(ERD10TJ * A)	10 to 100Ω,±5%,1/8W		*
R127	CF,(ERD10TJ151A)	150Ω,±5%,1/8W		
R128	CF,(ERD10TJ560A)	56Ω,±5%,1/8W		
R129	Not assigned			
R130	Not assigned			
R131	CF,(ERD10TJ471A)	470Ω,±5%,1/8W		
R132	CF,(ERD10TJ562A)	5.6kΩ,±5%,1/8W		
R133	CF,(ERD10TJ473A)	47kΩ,±5%,1/8W		
R134	CF,(ERD10TJ222A)	2.2kΩ,±5%,1/8W		
R135	Not assigned			
R136	Not assigned			
R137	Not assigned			
R138	Not assigned			
R139	Not assigned			
R140	Not assigned			
R141	CF,(ERD10TJ * A)	10 to 150Ω,±5%,1/8W		*
R142	CF,(ERD10TJ * A)	10 to 150Ω,±5%,1/8W		*
R143	CF,(ERD10TJ681A)	680Ω,±5%,1/8W		
R144	Var,MF,(RJ-6P 1kΩ)	1kΩ,1/2W		
R145	CF,(ERD10TJ821A)	820Ω,±5%,1/8W		
R146	CF,(ERD10TJ103A)	10kΩ,±5%,1/8W		
R147	CF,(ERD10TJ103A)	10kΩ,±5%,1/8W		
R148	CF,(ERD10TJ472A)	4.7kΩ,±5%,1/8W		
R149	CF,(ERD10TJ332A)	3.3kΩ,±5%,1/8W		
R150	CF,(ERD10TJ472A)	4.7kΩ,±5%,1/8W		
R151	CF,(ERD10TJ271A)	270Ω,±5%,1/8W		
R152	CF,(ERD10TJ331A)	330Ω,±5%,1/8W		
R153	CF,(ERD10TJ220A)	22Ω,±5%,1/8W		
R154	CF,(ERD10TJ * A)	10 to 100Ω,±5%,1/8W		*
R155	CF,(ERD10TJ * A)	10 to 150Ω,±5%,1/8W		*

( ): Manufacturer's part number

* : Selected at factory

Parts List : T-Z1(Z4) OUTPUT DIVIDER (U1) 6

CKT REF	DESCRIPTION	RATING		NOTE
R156	CF,(ERD10TJ121A)	120Ω,±5%,1/8W		
R157	CF,(ERD10TJ121A)	120Ω,±5%,1/8W		
R158	CF,(ARD25T561J)	560Ω,±5%,1/4W		
R159	CF,(ARD25T561J)	560Ω,±5%,1/4W		
R160	Not assigned			
R161	MF,(NRN1/4C4 292ΩD)	292Ω,±0.5%,1/4W		
R162	MF,(NRN1/4C4 292ΩD)	292Ω,±0.5%,1/4W		
R163	MF,(NRN1/4C4 17.8ΩD)	17.8Ω,±0.5%,1/4W		
R164	CF,(ERD10TJ510A)	51Ω,±5%,1/8W		
R165	CF,(ERD10TJ510A)	51Ω,±5%,1/8W		
R166	CF,(ERD10TJ510A)	51Ω,±5%,1/8W		
R167	CF,(ERD10TJ * A)	10 to 100Ω,±5%,1/8W		*
R168	CF,(ERD10TJ * A)	10 to 100Ω,±5%,1/8W		*
R169	CF,(ERD10TJ330A)	33Ω,±5%,1/8W		
R170	Not assigned			
R171	CF,(ARD25T391J)	390Ω,±5%,1/4W		
R172	CF,(ARD25T * J)	100Ω to 1kΩ,±5%,1/4		Q'ty 1 to 3, *
R173	Not assigned			
R174	Not assigned			
R175	CF,(ERD10TJ221A)	220Ω,±5%,1/8W		
R176	CF,(ERD10TJ * A)	1k to 1MΩ,±5%,1/8W		Q'ty 0 to 3, *
R177	CF,(ERD10TJ102A)	1kΩ,±5%,1/8W		
R178	CF,(ARD25T131J)	130Ω,±5%,1/4W		
R179	CF,(ERD10TJ820A)	82Ω,±5%,1/8W		
R180	CF,(ERD10TJ510A)	51Ω,±5%,1/8W		
R181	CF,(ERD10TJ820A)	82Ω,±5%,1/8W		
R182	CF,(ARD25T131J)	130Ω,±5%,1/4W		
R183	CF,(ERD10TJ * A)	10 to 150Ω,±5%,1/8W		*
R184	CF,(ERD10TJ * A)	10 to 150Ω,±5%,1/8W		*
R185	CF,(ERD10TJ471A)	470Ω,±5%,1/8W		
R186	CF,(ERD10TJ471A)	470Ω,±5%,1/8W		
R187	CF,(ERD10TJ152A)	1.5kΩ,±5%,1/8W		
R188	CF,(ERD10TJ152A)	1.5kΩ,±5%,1/8W		
R189	CF,(ERD10TJ152A)	1.5kΩ,±5%,1/8W		
R190	CF,(ERD10TJ103A)	10kΩ,±5%,1/8W		
R191	CF,(ERD10TJ102A)	1kΩ,±5%,1/8W		
R192	Var,MF,(RJ-6P 1kΩ)	1kΩ,1/2W		
R193	CF,(ERD10TJ510A)	51Ω,±5%,1/8W		
R194	CF,(ERD10TJ103A)	10kΩ,±5%,1/8W		

( ) : Manufacturer's part number
* : Selected at factory

44W83064 | 8/8

Parts List : T-Z1(Z5) U1 SIGNAL SUPPLY (U1) 7

CKT REF	DESCRIPTION	RATING		NOTE
J 1	Plug, (CNF3-20P-2.54DS)			
J 2	Connector, (CNF23A-20D-AA020S)			
J 3	Plug,(DF1-3P-2.5DS)			

( ) : Manufacturer's part number
* : Selected at factory

44W83065 | 1/1

Parts List : T-Z1(Z6) REFERENCE SIGNAL BRANCH (U2) 8

CKT REF	DESCRIPTION	RATING		NOTE
C 1	Elect,(CE04W1A101)	100μF,+20%,10V		
C 2	Elect,(CE04W1A101)	100μF,+20%,10V		
C 3	Elect,(CE04W1A101)	100μF,+20%,10V		
C 4	Elect,(CE04W1A101)	100μF,+20%,10V		
C 5	Cer,(CK732B1H103K)	0.01μF,±10%,50V		
C 6	Cer,(CK732B1H103K)	0.01μF,±10%,50V		
C 7	Cer,(CK732B1H103K)	0.01μF,±10%,50V		
C 8	Cer,(CK732B1H103K)	0.01μF,±10%,50V		
T 1	Plug,(DF1-2P-2.5DSA)			
L 1	Coil,(LF8-221K)	220μH		
L 2	Coil,(LF8-221K)	220μH		
L 3	Coil,(LF8-221K)	220μH		
Q 1	IC,(74LS00)			
Q 2	IC,(74LS00)			
Q 3	IC,(74LS390)			
Q 4	IC,(74LS00)			
R 1	CF,(ARD25T332J)	3.3kΩ,±5%,1/4W		

( ): Manufacturer's part number
* : Selected at factory

44W83067 | 1/1

Parts List : T-Z1(Z7) 10 kHz/1 MHz LOOP (U2) 9

CKT REF	DESCRIPTION	RATING		NOTE
C 1	Cer,(CK924C1H223M)	0.022μF,+20%,50V		
C 2	Cer,(CK924C1H223M)	0.022μF,+20%,50V		
C 3	Cer,(CK924C1H223M)	0.022μF,±20%,50V		
C 4	Cer,(CK924C1H223M)	0.022μF,±20%,50V		
C 5	Cer,(CK924C1H104M)	0.1μF,±20%,50V		
C 6	Cer,(CK924C1H104M)	0.1μF,±20%,50V		
C 7	Cer,(CK45B1H102KY)	1000pF,±10%,50V		
C 8	Elect,(CE04W1A101)	100μF,+20%,10V		
C 9	Elect,(CE04W1E470)	47μF,±20%,25V		
C10	Elect,(CE04W1E470)	47μF,±20%,25V		
C11	Cer,(CK924C1H223M)	0.022μF,±20%,50V		
C12	Elect,(CE04W1V100)	10μF,±20%,35V		
C13	Cer,(CK924C1H103M)	0.01μF,±20%,50V		
C14	Elect,(CE04W1A101)	100μF,±20%,10V		
C15	Elect,(CE04W1E470)	47μF,±20%,25V		
C16	Elect,(CE04W1E470)	47μF,+20%,25V		
C17	Elect,(CE04W1J2R2)	2.2μF,±20%,63V		
C18	Elect,(CE04W1J2R2)	2.2μF,±20%,63V		
C19	Elect,(CE04W1E470)	47μF,±20%,25V		
C20	Cer,(CC924CH1H331J)	330pF,±5%,50V		
C21	Cer,(CC924CH1H470J)	47pF,±5%,50V		
C22	Cer,(CC924CH1H470J)	47pF,±5%,50V		
C23	Cer,(CC45CH1H330JY)	33pF,±5%,50V		
C24	Cer,(CK45B1H102KY)	1000pF,±10%,50V		
C25	Cer,(CK45B1H102KY)	1000pF,±10%,50V		
C26	Cer,(CK45B1H102KY)	1000pF,±10%,50V		
C27	Cer,(CK45B1H102KY)	1000pF,±10%,50V		
C28	Cer,(CK45B1H102KY)	1000pF,±10%,50V		
C29	Elect,(CE04W1E470)	47μF,±20%,25V		
C30	Tant,(CS-E1D2R2M)	2.2μF,+20%,20V		
C31	Tant,(CS-E1D2R2M)	2.2μF,±20%,20V		
C32	Cer,(CK924C1H472M)	4700pF,±20%,50V		
C33	Cer,(CC924CH1H221J)	220pF,±5%,50V		
C34	Cer,(CC45CH1H100DY)	10pF,±0.5%,50V		
C35	Elect,(CE04W1J2R2)	2.2μF,±20%,63V		
C36	Elect,(CE04W1J2R2)	2.2μF,±20%,63V		
C37	Cer,(CC924CH1H331J)	330pF,±5%,50V		
C38	Cer,(CK924C1H103M)	0.01μF,±20%,50V		
C39	Elect,(SME16VB-470(M))	470μF,±20%,16V		
C40	Cer,(CK924C1H104M)	0.1μF,±20%,50V		
C41	Cer,(CK45B1H102KY)	1000pF,±10%,50V		
C42	Elect,(CE04W1A101)	100μF,±20%,10V		
C43	Elect,(CE04W1E470)	47μF,±20%,25V		
C44	Elect,(CE04W1A101)	100μF,±20%,10V		
C45	Cer,(CK45B1H102KY)	1000pF,±10%,50V		

( ): Manufacturer's part number
* : Selected at factory

44W83068 | 1/6

Parts List : T-Z1(Z7) 10 kHz/1 MHz LOOP (U2) 9

CKT REF	DESCRIPTION	RATING		NOTE
C46	Elect,(CE04W1E470)	47μF,±20%,25V		
C47	Cer,(CC924CH1H360J)	36pF,±5%,50V		
C48	Cer,(CK45B1H102KY)	1000pF,±10%,50V		
C49	Cer,(CC924CH1H331J)	330pF,±5%,50V		
C50	Cer,(CK732B1H103K)	0.01μF,±10%,50V		
C51	Cer,(CK732B1H103K)	0.01μF,±10%,50V		
C52	Cer,(CK924C1H103M)	0.01μF,±20%,50V		
C53	Cer,(CC45CH1H680JY)	68pF,±5%,50V		
C54	Elect,(CE04W1A101)	100μF,±20%,10V		
C55	Elect,(CE04W1A101)	100μF,±20%,10V		
C56	Elect,(CE04W1V100)	10μF,±20%,35V		
C57	Cer,(CC45CH1H101JY)	100pF,±5%,50V		
C58	Cer,(CK45B1H102KY)	1000pF,±10%,50V		
C59	Cer,(CK45B1H102KY)	1000pF,±10%,50V		
C60	Cer,(CK45B1H102KY)	1000pF,±10%,50V		
C61	Cer,(CK45B1H102KY)	1000pF,±10%,50V		
C62	Cer,(CK45B1H102KY)	1000pF,±10%,50V		
C63	Elect,(CE04W1E101)	100μF,±20%,25V		
C64	Cer,(CK45B1H102KY)	1000pF,±10%,50V		
C65	Cer,(CC924CH1H820J)	82pF,±5%,50V		
C66	Cer,(CK45B1H102KY)	1000pF,±10%,50V		
C67	Cer,(CK45B1H102KY)	1000pF,±10%,50V		
C68	Cer,(CK45B1H102KY)	1000pF,±10%,50V		
C69	Elect,(CE04W1V100)	10μF,±20%,35V		
C70	Elect,(CE04W1V100)	10μF,±20%,35V		
C71	Elect,(CE04W1V100)	10μF,±20%,35V		
C72	Cer,(CC924CH1H681J)	680pF,±5%,50V		
C73	Cer,(CK924C1H104M)	0.1μF,±20%,50V		
C74	Cer,(CK45B1H102KY)	1000pF,±10%,50V		
C75	Cer,(CK45B1H102KY)	1000pF,±10%,50V		
C76	Cer,(CK924C1H104M)	0.1μF,±20%,50V		
C77	Cer,(CK924C1H104M)	0.1μF,±20%,50V		
C78	Cer,(CK924C1H103M)	0.01μF,±20%,50V		
C79	Cer,(CK45B1H102KY)	1000pF,±10%,50V		
C80	Cer,(CK924C1H222M)	2200pF,±20%,50V		
C81	Cer,(CK45B1H102KY)	1000pF,±10%,50V		
C82	Elect,(CE04W1V100)	10μF,±20%,35V		
C83	Cer,(CK45B1H102KY)	1000pF,±10%,50V		
C84	Elect,(CE04W1V100)	10μF,±20%,35V		
C85	Cer,(CK924C1H103M)	0.01μF,±20%,50V		
C86	Cer,(CC924CH1H221J)	220pF,±5%,50V		
C87	Cer,(CC924CH1H471J)	470pF,±5%,50V		
C88	Cer,(CK924C1H103M)	0.01μF,±20%,50V		
C89	Cer,(CK924C1H103M)	0.01μF,±20%,50V		
C90	Cer,(CK924C1H472M)	4700pF,±20%,50V		

( ): Manufacturer's part number
* : Selected at factory

Parts List : T-Z1(Z7) 10 kHz/1 MHz LOOP (U2) 9

CKT REF	DESCRIPTION	RATING		NOTE
C91	Cer,(CK924C1H222M)	2200pF,±20%,50V		
C92	Cer,(CK732B1H103K)	0.01μF,±10%,50V		
C93	Cer,(CK732B1H103K)	0.01μF,±10%,50V		
C94	Elect,(CE04W1E470)	47μF,±20%,25V		
C95	Elect,(CE04W1E470)	47μF,±20%,25V		
C96	Elect,(CE04W1E470)	47μF,±20%,25V		
C97	Elect,(CE04W1E470)	47μF,±20%,25V		
C98	Cer,(CK924C1H104M)	0.1μF,±20%,50V		
C99	Cer,(CK924C1H223M)	0.022μF,±20%,50V		
C100	Cer,(CK924C1H103M)	0.01μF,±20%,50V		
C101	Cer,(CK45B1H102KY)	1000pF,±10%,50V		
J 1	Plug, (DF1-8P2.5DSA)			
L 1	Coil,(LF8-220K)	22μH		
L 2	Coil,(LF8-220K)	22μH		
L 3	Coil,(LF8-100K)	10μH		
L 4	Coil,(LF8-100K)	10μH		
L 5	Variable coil, (MC120 7.5T)	0.31μH		
L 6	Coil,(SP0408-6R8K)	6.8μH		
L 7	Coil,(LF8-100K)	10μH		
L 8	Coil,(LF8-101K)	100μH		
L 9	Coil,(LF8-101K)	100μH		
L 10	Beads core,(34T55682)			
L 11	Coil,(LF8-221K)	220μH		
L 12	Coil,(LF8-100K)	10μH		
L 13	Coil,(SP0408-6R8K)	6.8μH		
L 14	Variable coil, (MC120 5.5T)	0.31μH		
L 15	Coil,(LF8-100K)	10μH		
L 16	Coil,(LF8-100K)	10μH		
Q 1	IC,(74LS00)			
Q 2	IC,(74LS74A)			
Q 3	IC,(74LS196)			
Q 4	IC,(74LS196)			
Q 5	IC,(NJM5532D)			
Q 6	IC,(HD10551P)			
Q 7	IC,(MC145158P)			

( ): Manufacturer's part number
* : Selected at factory

Parts List : T-Z1(Z7) 10 kHz/1 MHz LOOP (U2) 9

CKT REF	DESCRIPTION	RATING		NOTE
Q 8	IC,(HD10551P)			
Q 9	IC,(MC145158P)			
Q10	IC,(NJM5532D)			
Q11	Di,(KV1226)			
Q12	FET,(2SK55E)			
Q13	FET,(2SK55E)			
Q14	Di,(1S953)			
Q15	Di,(1S953)			
Q16	Tr,(2SC3358)			
Q17	Tr,(2SC2368)			
Q18	Tr,(2SC3358)			
Q19	Di,breakdown, (RD5.1E(3))	4.95 to 5.2V,400mW		
Q20	Tr,(2SC2368)			
Q21	FET,(3SK59GR)			
Q22	Di,(KV1226)			
Q23	FET,(2SK55E)			
Q24	FET,(2SK55E)			
Q25	FET,(3SK59GR)			
Q26	Tr,(2SC2368)			
Q27	Di,(1S953)			
Q28	Di,(1S953)			
R 1	CF,(ARD25T510J)	51Ω,±5%,1/4W		
R 2	CF,(ARD25T181J)	180Ω,±5%,1/4W		
R 3	CF,(ARD25T510J)	51Ω,±5%,1/4W		
R 4	CF,(ARD25T181J)	180Ω,±5%,1/4W		
R 5	CF,(ARD25T103J)	10kΩ,±5%,1/4W		
R 6	CF,(ARD25T222J)	2.2kΩ,±5%,1/4W		
R 7	CF,(ARD25T472J)	4.7kΩ,±5%,1/4W		
R 8	CF,(ARD25T562J)	5.6kΩ,±5%,1/4W		
R 9	CF,(ARD25T103J)	10kΩ,±5%,1/4W		
R10	CF,(ARD25T272J)	2.7kΩ,±5%,1/4W		
R11	CF,(ARD25T122J)	1.2kΩ,±5%,1/4W		
R12	CF,(ARD25T103J)	10kΩ,±5%,1/4W		
R13	CF,(ARD25T332J)	3.3kΩ,±5%,1/4W		
R14	CF,(ARD25T562J)	5.6kΩ,±5%,1/4W		
R15	CF,(ARD25T103J)	10kΩ,±5%,1/4W		
R16	CF,(ARD25T681J)	680Ω,±5%,1/4W		
R17	CF,(ARD25T472J)	4.7kΩ,±5%,1/4W		
R18	CF,(ARD25T101J)	100Ω,±5%,1/4W		
R19	CF,(ARD25T105J)	1MΩ,±5%,1/4W		
R20	CF,(ARD25T392J)	3.9kΩ,±5%,1/4W		

( ): Manufacturer's part number
* : Selected at factory

Parts List : T-Z1(Z7) 10 kHz/1 MHz LOOP (U2) 9

CKT REF	DESCRIPTION	RATING		NOTE
R21	CF,(ARD25T272J)	2.7kΩ,±5%,1/4W		
R22	CF,(ARD25T333J)	33kΩ,±5%,1/4W		
R23	CF,(ARD25T102J)	1kΩ,±5%,1/4W		
R24	CF,(ARD25T562J)	5.6kΩ,±5%,1/4W		
R25	CF,(ARD25T272J)	2.7kΩ,±5%,1/4W		
R26	CF,(ARD25T102J)	1kΩ,±5%,1/4W		
R27	CF,(ARD25T102J)	1kΩ,±5%,1/4W		
R28	CF,(ARD25T222J)	2.2kΩ,±5%,1/4W		
R29	CF,(ARD25T333J)	33kΩ,±5%,1/4W		
R30	CF,(ARD25T471J)	470Ω,±5%,1/4W		
R31	CF,(ARD25T510J)	51Ω,±5%,1/4W		
R32	CF,(ARD25T510J)	51Ω,±5%,1/4W		
R33	CF,(ARD25T150J)	15Ω,±5%,1/4W		
R34	CF,(ARD25T150J)	15Ω,±5%,1/4W		
R35	CF,(ARD25T150J)	15Ω,±5%,1/4W		
R36	CF,(ARD25T510J)	51Ω,±5%,1/4W		
R37	CF,(ARD25T472J)	4.7kΩ,±5%,1/4W		
R38	CF,(ARD25T822J)	8.2kΩ,±5%,1/4W		
R39	CF,(ARD25T100J)	10Ω,±5%,1/4W		
R40	CF,(ARD25T101J)	100Ω,±5%,1/4W		
R41	CF,(ARD25T391J)	390Ω,±5%,1/4W		
R42	CF,(ARD25T391J)	390Ω,±5%,1/4W		
R43	CF,(ARD25T471J)	470Ω,±5%,1/4W		
R44	CF,(ARD25T331J)	330Ω,±5%,1/4W		
R45	CF,(ARD25T222J)	2.2kΩ,±5%,1/4W		
R46	CF,(ARD25T105J)	1MΩ,±5%,1/4W		
R47	CF,(ARD25T391J)	390Ω,±5%,1/4W		
R48	CF,(ARD25T391J)	390Ω,±5%,1/4W		
R49	CF,(ARD25T473J)	47kΩ,±5%,1/4W		
R50	CF,(ARD25T473J)	47kΩ,±5%,1/4W		
R51	CF,(ARD25T474J)	470kΩ,±5%,1/4W		
R52	CF,(ARD25T222J)	2.2kΩ,±5%,1/4W		
R53	CF,(ARD25T103J)	10kΩ,±5%,1/4W		
R54	CF,(ARD25T562J)	5.6kΩ,±5%,1/4W		
R55	CF,(ARD25T332J)	3.3kΩ,±5%,1/4W		
R56	CF,(ARD25T122J)	1.2kΩ,±5%,1/4W		
R57	CF,(ARD25T272J)	2.7kΩ,±5%,1/4W		
R58	CF,(ARD25T103J)	10kΩ,±5%,1/4W		
R59	CF,(ARD25T562J)	5.6kΩ,±5%,1/4W		
R60	CF,(ARD25T103J)	10kΩ,±5%,1/4W		
R61	CF,(ARD25T121J)	120Ω,±5%,1/4W		
R62	CF,(ARD25T474J)	470kΩ,±5%,1/4W		
R63	Not assigned			
R64	CF,(ARD25T392J)	3.9kΩ,±5%,1/4W		
R65	CF,(ARD25T104J)	100kΩ,±5%,1/4W		

( ): Manufacturer's part number
* : Selected at factory

Parts List : T-Z1(Z7) 10 kHz/1 MHz LOOP (U2) 9

CKT REF	DESCRIPTION	RATING		NOTE
R66	CF,(ARD25T332J)	3.3kΩ,±5%,1/4W		
R67	CF,(ERD10TJ103A)	10kΩ,±5%,1/8W		
R68	CF,(ARD25T222J)	2.2kΩ,±5%,1/4W		
R69	CF,(ARD25T473J)	47kΩ,±5%,1/4W		
R70	CF,(ARD25T391J)	390Ω,±5%,1/4W		
R71	CF,(ARD25T391J)	390Ω,±5%,1/4W		
R72	CF,(ARD25T333J)	33kΩ,±5%,1/4W		
R73	CF,(ARD25T332J)	3.3kΩ,±5%,1/4W		
R74	CF,(ARD25T332J)	3.3kΩ,±5%,1/4W		
R75	CF,(ARD25T152J)	1.5kΩ,±5%,1/4W		
R76	CF,(ARD25T102J)	1kΩ,±5%,1/4W		
R77	CF,(ARD25T222J)	2.2kΩ,±5%,1/4W		
R78	CF,(ARD25T562J)	5.6kΩ,±5%,1/4W		
R79	CF,(ARD25T102J)	1kΩ,±5%,1/4W		
R80	CF,(ARD25T331J)	330Ω,±5%,1/4W		
R81	CF,(ARD25T150J)	15Ω,±5%,1/4W		
Z 1	Hybrid,(PD03-L)			
Z 2	Mixer,(M8)			
Z 3	Mixer,(M8)			

( ): Manufacturer's part number
* : Selected at factory

44W83068 6/6

Parts List : T-Z1(Z8) 100 MHz LOOP (U2) 10

CKT REF	DESCRIPTION	RATING		NOTE
C 1	Cer,(CC45CH1H100DY)	10pF,±0.5pF,50V		
C 2	Cer,(CC45CH1H120JY)	12pF,±5%,50V		
C 3	Cer,(CK732B1H103K)	0.01μF,±10%,50V		
C 4	Cer,(CC732CH1H101J)	100pF,±5%,50V		
C 5	Cer,(CC732CH1H101J)	100pF,±5%,50V		
C 6	Cer,(CC924CH1H101J)	100pF,±5%,50V		
C 7	Cer,(CC924CH1H221J)	220pF,±5%,50V		
C 8	Cer,(CC924CH1H101J)	100pF,±5%,50V		
C 9	Cer,(CK45B1H102KY)	1000pF,±10%,50V		
C10	Cer,(CK45B1H102KY)	1000pF,±10%,50V		
C11	Cer,(CJ732B1H103K)	0.01μF,±10%,50V		
C12	Elect,(CE04W1A101)	100μF,±20%,10V		
C13	Elect,(CE04W1A101)	100μF,±20%,10V		
C14	Cer,(CK732B1H103K)	0.01μF,±10%,50V		
C15	Cer,(CC45CJ1H030CY)	3pF,±0.25pF,50V		
C16	Cer,(CC45CJ1H030CY)	3pF,±0.25pF,50V		
C17	Not assigned			
C18	Not assigned			
C19	Cer,(CC924CH1H101J)	100pF,±5%,50V		
C20	Tant,(CS-E1D2R2M)	2.2μF,±20%,20V		
C21	Tant,(CS-E1D2R2M)	2.2μF,±20%,20V		
C22	Elect,(CE04W1V100)	10μF,±20%,35V		
C23	Elect,(CE04W1V100)	10μF,±20%,35V		
C24	Elect,(CE04W1V100)	10μF,±20%,35V		
C25	Elect,(CE04W1V100)	10μF,±20%,35V		
C26	Cer,(CK732B1H103K)	0.01μF,±10%,50V		
C27	Elect,(CE04W1E470)	47μF,±20%,25V		
C28	Elect,(CE04W1E470)	47μF,±20%,25V		
C29	Cer,(CK732B1H103K)	0.01μF,±10%,50V		
C30	Cer,(CK732B1H103K)	0.01μF,±10%,50V		
C31	Elect,(CE04W1E470)	47μF,±20%,25V		
C32	Elect,(CE04W1E470)	47μF,±20%,25V		
C33	Cer,(CK732B1H103K)	0.01μF,±10%,50V		
C34	Cer,(CK732B1H103K)	0.01μF,±10%,50V		
C35	Elect,(CE04W1V100)	10μF,±20%,35V		
C36	Elect,(CE04W1V100)	10μF,±20%,35V		
C37	Cer,(CK732B1H103K)	0.01μF,±10%,50V		
C38	Cer,(CK924C1H103M)	0.01μF,±20%,50V		
C39	Cer,(CK924C1H103M)	0.01μF,±20%,50V		
C40	Cer,(CK924C1H103M)	0.01μF,±20%,50V		
C41	Cer,(CK924C1H103M)	0.01μF,±20%,50V		
C42	Cer,(CK924C1H103M)	0.01μF,±20%,50V		
C43	Elect,(CE04W1A101)	100μF,±20%,10V		
C44	Cer,(CK924C1H103M)	0.01μF,±20%,50V		
C45	Elect,(CE04W1A101)	100μF,±20%,10V		

( ): Manufacturer's part number
* : Selected at factory

44W83069 1/3

Parts List : T-Z1(Z8) 100 MHz LOOP (U2) 10

CKT REF	DESCRIPTION	RATING		NOTE
C46	Elect,(CE04W1A101)	100μF,±20%,10V		
C47	Cer,(CK732B1H103K)	0.01μF,±10%,50V		
C48	Cer,(CK45B1H102KY)	1000pF,±10%,50V		
C49	Cer,(CK45B1H102KY)	1000pF,±10%,50V		
C50	Elect,(SME6.3VB-1000(M))	1000μF,±20%,6.3V		
J 1	Plug,(DF1-8P2.5DSA)			
L 1	Coil,(34L74431P)	115nH		
L 2	Coil,(SP0408-R33K)	0.33μH		
L 3	Coil,(SP0408-R33K)	0.33μH		
L 4	Coil,(LF8-100K)	10μH		
L 5	Coil,(34L74430J)	56nH		
L 6	Not assigned			
L 7	Coil,(LF8-100K)	10μH		
L 8	Coil,(LF8-100K)	10μH		
L 9	Coil,(LF8-100K)	10μH		
L10	Coil,(LF8-100K)	10μH		
L11	Coil,(LF8-100K)	10μH		
Q 1	IC,(μPC1651G)			
Q 2	IC,(μPC1651G)			
Q 3	IC,(NJM5532D)			
Q 4	IC,(NJM5532D)			
Q 5	IC,(HI1-201-5)			
Q 6	IC,(MC74HC393N)			
Q 7	IC,(MC4044P)			
Q 8	IC,(MC4044P)			
Q 9	IC,(MC145157P)			
Q10	IC,(μPB566C)			
R 1	CF,(ARD25T * J)	4.7Ω to 1kΩ,±5%,1/4W		Q'ty 0 or 1, *
R 2	CF,(ARD25T101J)	100Ω,±5%,1/4W		
R 3	CF,(ARD25T101J)	100Ω,±5%,1/4W		
R 4	CF,(ARD25T680J)	68Ω,±5%,1/4W		
R 5	MF,(RM73B2B102JD)	1kΩ,±5%,1/8W		
R 6	MF,(RM73B2B332JD)	3.3kΩ,±5%,1/8W		
R 7	MF,(RM73B2B102JD)	1kΩ,±5%,1/8W		
R 8	MF,(RM73B2B102JD)	1kΩ,±5%,1/8W		

( ): Manufacturer's part number
* : Selected at factory

44W83069 2/3

Parts List : T-Z1(Z8) 100 MHz LOOP (U2) 10

CKT REF	DESCRIPTION	RATING		NOTE
R 9	MF,(RM73B2B471JD)	470Ω,±5%,1/8W		
R10	MF,(RM73B2B122JD)	1.2kΩ,±5%,1/8W		
R11	Not assigned			
R12	MF,(RM73B2B471JD)	470Ω,±5%,1/8W		
R13	MF,(RM73B2B472JD)	4.7kΩ,±5%,1/8W		
R14	MF,(RM73B2B472JD)	4.7kΩ,±5%,1/8W		
R15	MF,(RM73B2B223JD)	22kΩ,±5%,1/8W		
R16	Not assigned			
R17	Not assigned			
R18	MF,(RM73B2B223JD)	22kΩ,±5%,1/8W		
Z 1	Mixer,(M18X)			
Z 2	Mixer,(M8)			

( ): Manufacturer's part number
* : Selected at factory

44W83069 3/3

Parts List : T-Z1(Z9) 100 MHz VCO (U2) [11]

CKT REF	DESCRIPTION	RATING		NOTE
C 1	Elect,(CS-E1V2R2M)	2.2μF,±20%,35V		
C 2	Cer,(CC732CH1H080D)	8pF,±0.5pF,50V		
C 3	Cer,(CC732CK1H020D)	2pF,±0.5pF,50V		
C 4	Cer,(CC732CH1H040D)	4pF,±0.5pF,50V		
C 5	Cer,(CC732CJ1H030C)	3pF,±0.25pF,50V		
C 6	Cer,(CK732B1H102k)	1000pF,±10%,50V		
C 7	Cer,(CC732CK1H020C)	2pF,±0.25pF,50V		
C 8	Cer,(CC732CH1H040D)	4pF,±0.5pF,50V		
C 9	Cer,(CK732B1H102K)	1000pF,±10%,50V		
C10	Cer,(CK732B1H102K)	1000pF,±10%,50V		
C11	Cer,(CC732CH1H120J)	12pF,±5%,50V		
C12	Cer,(CC732CH1H040D)	4pF,±0.5pF,50V		
C13	Cer,(CC732CJ1H030C)	3pF,±0.25pF,50V		
C14	Cer,(CC732CH1H050D)	5pF,±0.5pF,50V		
C15	Cer,(CK732B1H102K)	1000pF,±10%,50V		
C16	Cer,(CC732CK1H020C)	2pF,±0.25pF,50V		
C17	Cer,(CC732CH1H040D)	4pF,±0.5pF,50V		
C18	Cer,(CK732B1H102K)	1000pF,±10%,50V		
C19	Cer,(CK732B1H102K)	1000pF,±10%,50V		
C20	Cer,(CC732CH1H100D)	10pF,±0.5pF,50V		
C21	Cer,(CC732CH1H180J)	18pF,±5%,50V		
C22	Cer,(CC732CH1H270J)	27pF,±5%,50V		
C23	Cer,(CK732B1H102K)	1000pF,±10%,50V		
C24	Not assigned			
C25	Cer,(CC732CH1H120J)	12pF,±5%,50V		
C26	Cer,(CK732B1H102K)	1000pF,±10%,50V		
C27	Not assigned			
C28	Cer,(CK732B1H102K)	1000pF,±10%,50V		
C29	Elect,(CE04W1V100)	10μF,±20%,35V		
C30	Elect,(CE04W1V100)	10μF,±20%,35V		
C31	Cer,(CK732B1H103K)	0.01μF,±10%,50V		
C32	Cer,(CK732B1H103K)	0.01μF,±10%,50V		
C33	Cer,(CK732B1H103K)	0.01μF,±10%,50V		
C34	Cer,(CK732B1H103K)	0.01μF,±10%,50V		
C35	Elect,(CE04W1V100)	10μF,±20%,35V		
C36	Cer,(CK732B1H103K)	0.01μF,±10%,50V		
C37	Cer,(CK732B1H103K)	0.01μF,±10%,50V		
C38	Elect,(CE04W1V100)	10μF,±20%,35V		
C39	Cer,(CK732B1H103K)	0.01μF,±10%,50V		
C40	Cer,(CK732B1H103K)	0.01μF,±10%,50V		
C41	Cer,(CK732B1H103K)	0.01μF,±10%,50V		
C42	Elect,(CE04W1V100)	10μF,±20%,35V		
C43	Cer,(CK732B1H103K)	0.01μF,±10%,50V		
C44	Cer,(CK732B1H103K)	0.01μF,±10%,50V		
C45	Elect,(CE04W1E100)	10μF,±20%,25V		

( ): Manufacturer's part number
* : Selected at factory

Parts List : T-Z1(Z9) 100 MHz VCO (U2) [11]

CKT REF	DESCRIPTION	RATING		NOTE
C46 to C59	Cer,(CK732B1H103K)	0.01μF,+10%,50V		
C60	Cer,(CC732CH1H100D)	10pF,±0.5pF,50V		
C61	Cer,(CC732CH1H100D)	10pF,±0.5pF,50V		
C62	Cer,(CK732B1H103K)	0.01μF,+10%,50V		
C63	Cer,(CK732B1H103K)	0.01μF,±10%,50V		
C64	Cer,(CK732B1H103K)	0.01μF,±10%,50V		
C65	Cer,(CC732CJ1H030C)	3pF,±0.25pF,50V		
J 1	Plug, (DF1-8P2.5DSA)			
L 1	Semirigid coil, (34L74455)			
L 2	Semirigid coil, (34L74455B)			
L 3	Semirigid coil, (34L74455C)			
L 4	Coil,(LF8-221K)	220μH		
L 5	Coil,(LF8-221K)	220μH		
L 6	Coil,(LF8-221K)	220μH		
L 7	Coil,(LF8-221K)	220μH		
L 8	Coil,(LF8-221K)	220μH		
L 9	Coil,(LF8-221K)	220μH		
L10	Coil,(342L62001)			
L11	Coil,(342L62001)			
L12	Coil,(342L62001)			
L13	Coil,(442T50126)	40μH		
Q 1	Di,(1S2208)			
Q 2	Di,(1S2208)			
Q 3	Tr,(2SC2369)			
Q 4	Tr,(2SC2369)			
Q 5	Di,(1S2208)			
Q 6	Di,(1S2208)			
Q 7	Tr,(2SC2369)			
Q 8	Tr,(2SC2369)			
Q 9	Di,(1SV50)			
Q10	Di,(1SV50)			
Q11	Di,(1SV50)			
Q12	Di,(1S2208)			

( ): Manufacturer's part number
* : Selected at factory

Parts List : T-Z1(Z9) 100 MHz VCO (U2) [11]

CKT REF	DESCRIPTION	RATING		NOTE
Q13	Di,(1S2208)			
Q14	Di,(1S2208)			
Q15	Tr,(2SC2369)			
Q16	Tr,(2SC2369)			
Q17	Photocoupler,(TLP521-1)			
Q18	Photocoupler,(TLP521-1)			
Q19	Photocoupler,(TLP521-1)			
Q20	Tr,(2SC1623)			
Q21	Tr,(2SC1623)			
Q22	Tr,(2SC1623)			
Q23	IC,(79606)			
Q24	IC,(79606)			
Q25	IC,(79606)			
Q26	IC,(μPC1651G)			
Q27	IC,(μPC1651G)			
Q28	IC,(μPC1654A)			
Q29	Not assigned			
Q30	Not assigned			
Q31	Di,(1S2208)			
Q32	Di,(2SC3358)			
Q33	Tr,(2SC2369)			
Q34	Tr,(2SC2369)			
Q35	Tr,(2SC2369)			
Q36	Di,breakdown,(RD5.1EB)	4.8 to 5.4V,400mW		
R 1	MF,(RM73B2B102JD)	1kΩ,±5%,1/8W		
R 2	MF,(RM73B2B4R7JD)	4.7Ω,±5%,1/8W		
R 3	Not assigned			
R 4	MF,(RM73B2B102JD)	1kΩ,±5%,1/8W		
R 5	MF,(RM73B2B681JD)	680Ω,±5%,1/8W		
R 6	MF,(RM73B2B681JD)	680Ω,±5%,1/8W		
R 7	MF,(RM73B2B332JD)	3.3kΩ,±5%,1/8W		
R 8	MF,(RM73B2B472JD)	4.7kΩ,±5%,1/8W		
R 9	MF,(RM73B2B103JD)	10kΩ,±5%,1/8W		
R10	MF,(RM73B2B103JD)	10kΩ,±5%,1/8W		
R11	MF,(RM73B2B * JD)	0 to 100Ω,±5%,1/8W		*
R12	MF,(RM73B2B681JD)	680Ω,±5%,1/8W		
R13	MF,(RM73B2B681JD)	680Ω,±5%,1/8W		
R14	Not assigned			
R15	Not assigned			
R16	MF,(RM73B2B102JD)	1kΩ,±5%,1/8W		
R17	MF,(RM73B2B681JD)	680Ω,±5%,1/8W		
R18	MF,(RM73B2B681JD)	680Ω,±5%,1/8W		
R19	MF,(RM73B2B332JD)	3.3kΩ,±5%,1/8W		
R20	MF,(RM73B2B472JD)	4.7kΩ,±5%,1/8W		

( ): Manufacturer's part number
* : Selected at factory

Parts List : T-Z1(Z9) 100 MHz VCO (U2) [11]

CKT REF	DESCRIPTION	RATING		NOTE
R21	MF,(RM73B2B103JD)	10kΩ,±5%,1/8W		
R22	MF,(RM73B2B103JD)	10kΩ,±5%,1/8W		
R23	MF,(RM73B2B * JD)	0 to 100Ω,±5%,1/8W		*
R24	MF,(RM73B2B681JD)	680Ω,±5%,1/8W		
R25	MF,(RM73B2B681JD)	680Ω,±5%,1/8W		
R26	Not assigned			
R27	Not assigned			
R28	MF,(RM73B2B102JD)	1kΩ,±5%,1/8W		
R29	MF,(RM73B2B681JD)	680Ω,±5%,1/8W		
R30	MF,(RM73B2B681JD)	680Ω,±5%,1/8W		
R31	MF,(RM73B2B332KD)	3.3kΩ,±5%,1/8W		
R32	MF,(RM73B2B472JD)	4.7kΩ,±5%,1/8W		
R33	MF,(RM73B2B103JD)	10kΩ,±5%,1/8W		
R34	MF,(RM73B2B103JD)	10kΩ,±5%,1/8W		
R35	MF,(RM73B2B * KD)	0 to 10Ω,±5%,1/8W		*
R36	MF,(RM73B2B681JD)	680Ω,±5%,1/8W		
R37	MF,(RM73B2B681JD)	680Ω,±5%,1/8W		
R38	Not assigned			
R39	Not assigned			
R40	MF,(RM73B2B103JD)	10kΩ,±5%,1/8W		
R41	MF,(RM73B2B471JD)	470Ω,±5%,1/8W		
R42	MF,(RM73B2B471JD)	470Ω,±5%,1/8W		
R43	MF,(RM73B2B103JD)	10kΩ,±5%,1/8W		
R44	MF,(RM73B2B471JD)	470Ω,±5%,1/8W		
R45	MF,(RM73B2B103JD)	10kΩ,±5%,1/8W		
R46	Not assigned			
R47	Not assigned			
R48	Not assigned			
R49	Not assigned			
R50	Not assigned			
R51	Not assigned			
R52	Not assigned			
R53	MF,(RM73B2B220JD)	22Ω,±5%,1/8W		
R54	MF,(RM73B2B220JD)	22Ω,±5%,1/8W		
R55	MF,(RM73B2B101JD)	100Ω,±5%,1/8W		
R56	MF,(RM73B2B680JD)	68Ω,±5%,1/8W		
R57	MF,(RM73B2B101JD)	100Ω,±5%,1/8W		
R58	MF,(RM73B2B150JD)	15Ω,±5%,1/8W		
R59	MF,(RM73B2B150JD)	15Ω,±5%,1/8W		
R60	MF,(RM73B2B221JD)	220Ω,±5%,1/8W		
R61	MF,(RM73B2B221JD)	220Ω,±5%,1/8W		
R62	MF,(RM73B2B101JD)	100Ω,±5%,1/8W		
R63	MF,(RM73B2B680JD)	68Ω,±5%,1/8W		
R64	MF,(RM73B2B101JD)	100Ω,±5%,1/8W		
R65	MF,(RM73B2B * JD)	0 to 150Ω,±5%,1/8W		*

( ): Manufacturer's part number
* : Selected at factory

Parts List : T-Z1(Z9) 100 MHz VCO (U2) 11

CKT REF	DESCRIPTION	RATING		NOTE
R66	MF,(RM73B2B102JD)	1kΩ,±5%,1/8W		
R67	MF,(RM73B2B471JD)	470Ω,±5%,1/8W		
R68	MF,(RM73B2B472JD)	4.7kΩ,±5%,1/8W		
R69	MF,(RM73B2B471JD)	470Ω,±5%,1/8W		
R70	MF,(RM73B2B101JD)	100Ω,±5%,1/8W		
R71	MF,(RM73B2B * JD)	0 to 150Ω,±5%,1/8W		*
R72	MF,(RM73B2B102JD)	1kΩ,±5%,1/8W		
R73	MF,(RM73B2B * JD)	0 to 150Ω,±5%,1/8W		*
R74	MF,(RM73B2B102JD)	1kΩ,±5%,1/8W		
R75	MF,(RM73B2B221JD)	220Ω,±5%,1/8W		
R76	Not assigned			
R77	Not assigned			
R78	Not assigned			
R79	Not assigned			
R80	MF,(RM73B2B221JD)	220Ω,±5%,1/8W		
R81	MF,(RM73B2B221JD)	220Ω,±5%,1/8W		
R82	MF,(RM73B2B510JD)	51Ω,±5%,1/8W		
R83	MF,(RM73B2B331JD)	330Ω,±5%,1/8W		
R84	MF,(RM73B2B331JD)	330Ω,±5%,1/8W		
R85	MF,(RM73B2B331JD)	330Ω,±5%,1/8W		

( ): Manufacturer's part number
* : Selected at factory

44W83070 4/4

Parts List : T-Z1(Z10) 10 MHz LOOP (U2) 12

CKT REF	DESCRIPTION	RATING		NOTE
C 1	Cer,(CK924C1H103M)	0.01μF,±20%,50V		
C 2	Cer,(CK924C1H103M)	0.01μF,±20%,50V		
C 3	Cer,(CK924C1H103M)	0.01μF,±20%,50V		
C 4	Cer,(CK924C1H103M)	0.01μF,±20%,50V		
C 5	Cer,(CK924C1H103M)	0.01μF,±20%,50V		
C 6	Elect,(CE04W1A101)	100μ,±20%,10V		
C 8	Elect,(CE04W1A101)	100μ,±20%,10V		
C 9	Cer,(CK732B1H103K)	0.01μF,±10%,50V		
C10	Cer,(CK732B1H103K)	0.01μF,±10%,50V		
C11	Cer,(CK732B1H103K)	0.01μF,±10%,50V		
C12	Cer,(CK732B1H103K)	0.01μF,±10%,50V		
C13	Elect,(CE04W1A101)	100μ,±20%,10V		
C14	Elect,(CE04W1E470)	47μF,±20%,25V		
C15	Elect,(CE04W1E470)	47μF,±20%,25V		
C16	Tant,(CS-E1V010M)	1μF,±20%,35V		
C17	Tant,(CS-E1V010M)	1μF,±20%,35V		
C18	Elect,(CE04W1E470)	47μF,±20%,25V		
C19	Elect,(CE04W1E470)	47μF,±20%,25V		
C20	Cer,(CK732B1H103K)	0.01μF,±10%,50V		
C21	Cer,(CK732B1H103K)	0.01μF,±10%,50V		
C22	Elect,(CE04W1E470)	47μF,±20%,25V		
C23	Elect,(CE04W1E470)	47μF,±20%,25V		
C24	Elect,(CE04W1A101)	100μ,±20%,10V		
C25	Cer,(CC732CH1H150J)	15pF,±5%,50V		
C26	Cer,(CC45CH1H330JY)	33pF,±5%,50V		
C27	Cer,(CK924C1H104M)	0.1μF,±20%,50V		
C28	Cer,(CK732B1H103K)	0.01μF,±10%,50V		
C29	Cer,(CK732B1H103K)	0.01μF,±10%,50V		
C30	Cer,(CK732B1H103K)	0.01μF,±10%,50V		
C31	Cer,(CK732B1H103K)	0.01μF,±10%,50V		
C32	Elect,(CE04W1E470)	47μF,±20%,25V		
C33	Elect,(CE04W1E470)	47μF,±20%,25V		
C34	Elect,(CE04W1E470)	47μF,±20%,25V		
C35	Elect,(CE04W1E470)	47μF,±20%,25V		
C36	Cer,(CK924C1H103M)	0.01μF,±20%,50V		
C37	Cer,(CK45B1H102KY)	1000pF,±10%,50V		
C38	Cer,(CK45B1H102KY)	1000pF,±10%,50V		
C39	Cer,(CC45CH1H330JY)	33pF,±5%,50V		
C40	Cer,(CK924C1H104M)	0.1μF,±20%,50V		
C41	Cer,(CK45B1H102KY)	1000pF,±10%,50V		
C42	Cer,(CK924C1H103M)	0.01μF,±20%,50V		
C43	Elect,(CE04W1E470)	47μF,±20%,25V		
C44	Cer,(CC924CH1H681J)	680pF,±5%,50V		
C45	Cer,(CK45B1H102KY)	1000pF,±10%,50V		

( ): Manufacturer's part number
* : Selected at factory

44W83071 1/4

Parts List : T-Z1(Z10) 10 MHz LOOP (U2) 12

CKT REF	DESCRIPTION	RATING		NOTE
C46	Cer,(CK924C1H103M)	0.01μF,±20%,50V		
C47	Cer,(CK45B1H102KY)	1000pF,±10%,50V		
C48	Cer,(CK45B1H102KY)	1000pF,±10%,50V		
C49	Cer,(CK45B1H102KY)	1000pF,±10%,50V		
C50	Cer,(CK45B1H102KY)	1000pF,±10%,50V		
C51	Cer,(CC45CH1H330JY)	33pF,±5%,50V		
C52	Cer,(CK45B1H102KY)	1000pF,±10%,50V		
C53	Cer,(CC45CH1H330JY)	33pF,±5%,50V		
C54	Cer,(CK45B1H102KY)	1000pF,±10%,50V		
C55	Cer,(CK45B1H102KY)	1000pF,±10%,50V		
C56	Cer,(CK45B1H102KY)	1000pF,±10%,50V		
C57	Cer,(CK924C1H103M)	0.01μF,±20%,50V		
C58	Cer,(CK45B1H102KY)	1000pF,±10%,50V		
J 1	Plug, (DF1-BP2.5DSA)			
L 1	Coil,(LF8-101K)	100μH		
L 2	Coil,(LF8-221K)	220μH		
L 3	Coil,(LF8-101K)	100μH		
L 4	Coil,(LF8-101K)	100μH		
L 5	Beads core,(34T55682)			
L 6	Coil,(SP0408-6R8K)	6.8μH		
L 7	Coil,(LF8-221K)	220μH		
L 8	Coil,(LF8-100K)	10μH		
L 9	Coil,(MC120 2.5T)			
L10	Coil,(SP0408-6R8K)	6.8μH		
Q 1	IC,(MC74HC390N)			
Q 2	IC,(MC4044P)			
Q 3	IC,(MC4044P)			
Q 4	IC,(MC14515?P)			
Q 5	IC,(HD10551P)			
Q 6	IC,(NJM5532D)			
Q 7	IC,(HI-201-5)			
Q 8	IC,(74S00N)			
Q 9	Tr,(2SC2368)			
Q10	Tr,(2SC2368)			
Q11	Tr,(2SC2368)			
Q12	FET,(3SK59GR)			
Q13	FET,(3SK59GR)			
Q14	FET,(3SK59GR)			
Q15	FET,(2SK55E)			

( ): Manufacturer's part number
* : Selected at factory

44W83071 2/4

Parts List : T-Z1(Z10) 10 MHz LOOP (U2) 12

CKT REF	DESCRIPTION	RATING		NOTE
Q16	FET,(2SK55E)			
Q17	FET,(2SK55E)			
Q18	Di,(1SV50)			Q'ty 3, Series connection
R 1	CF,(ARD25T332J)	3.3kΩ,±5%,1/4W		
R 2	CF,(ARD25T103J)	10kΩ,±5%,1/4W		
R 3	CF,(ARD25T103J)	10kΩ,±5%,1/4W		
R 4	CF,(ARD25T102J)	1kΩ,±5%,1/4W		
R 5	CF,(ARD25T103J)	1kΩ,±5%,1/4W		
R 6	CF,(ARD25T821J)	820Ω,±5%,1/4W		
R 7	CF,(ARD25T821J)	820Ω,±5%,1/4W		
R 8	CF,(ARD25T102J)	1kΩ,±5%,1/4W		
R 9	CF,(ARD25T221J)	220Ω,±5%,1/4W		
R10	CF,(ARD25T471J)	470Ω,±5%,1/4W		
R11	CF,(ARD25T222J)	2.2kΩ,±5%,1/4W		
R12	CF,(ARD25T391J)	390Ω,±5%,1/4W		
R13	CF,(ARD25T222J)	2.2kΩ,±5%,1/4W		
R14	CF,(ARD25T470J)	47Ω,±5%,1/4W		
R15	CF,(ARD25T391J)	390Ω,±5%,1/4W		
R16	CF,(ARD25T473J)	47kΩ,±5%,1/4W		
R17	CF,(ARD25T473J)	47kΩ,±5%,1/4W		
R18	CF,(ARD25T223J)	22kΩ,±5%,1/4W		
R19	CF,(ARD25T102J)	1kΩ,±5%,1/4W		
R20	CF,(ARD25T153J)	15kΩ,±5%,1/4W		
R21	CF,(ARD25T471J)	470Ω,±5%,1/4W		
R22	CF,(ARD25T562J)	5.6kΩ,±5%,1/4W		
R23	CF,(ARD25T101J)	100Ω,±5%,1/4W		
R24	CF,(ARD25T391J)	390Ω,±5%,1/4W		
R25	CF,(ARD25T473J)	47kΩ,±5%,1/4W		
R26	CF,(ARD25T332J)	3.3kΩ,±5%,1/4W		
R27	CF,(ARD25T103J)	10kΩ,±5%,1/4W		
R28	CF,(ARD25T272J)	2.7kΩ,±5%,1/4W		
R29	CF,(ARD25T122J)	1.2kΩ,±5%,1/4W		
R30	CF,(ARD25T332J)	3.3kΩ,±5%,1/4W		
R31	CF,(ARD25T103J)	10kΩ,±5%,1/4W		
R32	CF,(ARD25T562J)	5.6kΩ,±5%,1/4W		
R33	CF,(ARD25T391J)	390Ω,±5%,1/4W		
R34	CF,(ARD25T474J)	470kΩ,±5%,1/4W		
R35	CF,(ARD25T222J)	2.2kΩ,±5%,1/4W		
R36	CF,(ARD25T473J)	47kΩ,±5%,1/4W		
R37	CF,(ARD25T391J)	390Ω,±5%,1/4W		
R38	CF,(ARD25T474J)	470kΩ,±5%,1/4W		

( ): Manufacturer's part number
* : Selected at factory

44W83071 3/4

Parts Lit : T-Z1(Z10) 10 MHz LOOP (U2) 12

CKT REF	DESCRIPTION	RATING		NOTE
R39	CF,(ARD25T391J)	390Ω,±5%,1/4W		
Z 1	Mixer,(M8)			

( ): Manufacturer's part number
* : Selected at factory

44W83071 4/4

Parts List : T-Z1(Z11) 10 MHz/20 MHz DOUBLER (U2) 13

CKT REF	DESCRIPTION	RATING		NOTE
C 1	Elect,(CE04W1V100)	10μF,+20%,35V		
C 2	Cer,(CK924F1H104Z)	0.1μF,+80/-20%,50V		
C 3	Elect,(CE04W1V100)	10μF,+20%,35V		
C 4	Elect,(CE04W1V100)	10μF,±20%,35V		
C 5	Cer,(CK924F1H104Z)	0.1μF,+80/-20%,50V		
C 6	Elect,(CE04W1V100)	10μF, 20%,50V		
C 7	Cer,(CK924F1H104Z)	0.1μF,+80/-20%,50V		
C 8	Not assigned			
C 9	Not assigned			
C10	Not assigned			
C11	Not assigned			
C12	Not assigned			
C13	Cer,(CK924F1H104Z)	0.1μF,+80/-20%,50V		
C14	Not assigned			
C15	Cer,(CC45CK1H020CY)	2pF,±0.25pF,50V		
C16	Cer,(CC45CH1H101JY)	100pF,±5%,50V		
C17	Cer,(CC45CH1H390JY)	39pF,±5%,50V		
C18	Var,cer,(TZ03R300A)	30pF,+0.05pF,100V		
C19	Cer,(CC45CJ1H030CY)	3pF,±0.25pF,50V		
C20	Cer,(CK924F1H104Z)	0.1μF,+80/-20%,50V		
C21	Cer,(CK924F1H104Z)	0.1μF,+80/-20%,50V		
C22	Cer,(CK924F1H104Z)	0.1μF,+80/-20%,50V		
C23	Cer,(CK924F1H104Z)	0.1μF,+80/-20%,50V		
C24	Cer,(CK45CH1H151JY)	150pF,±5%,50V		
C25	Cer,(CK45CH1H151JY)	150pF,±5%,50V		
J 1	Plug,(DF1-3P2.5DSA)			
L 1	Coil,(LF8-100K)	10μH		
L 2	Coil,(LF8-100K)	10μH		
L 3	Coil,(SP0408-R47K)	0.47μH		
L 4	Coil,(SP0408-R47K)	0.47μH		
Q 1	FET,(2SK55E)			
Q 2	Tr,(2SC2369)			
Z 1	Doubler,(CDM103)	20MHz		

( ): Manufacturer's part number
* : Selected at factory

44W83072 1/2

Parts List : T-Z1(Z11) 10 MHz/20 MHz DOUBLER (U2) 13

CKT REF	DESCRIPTION	RATING		NOTE
R 1	CF,(ARD25T332J)	3.3kΩ,±5%,1/4W		
R 2	CF,(ARD25T474J)	470kΩ,±5%,1/4W		
R 3	CF,(ARD25T152J)	1.5kΩ,±5%,1/4W		
R 4	CF,(ARD25T102J)	1kΩ,±5%,1/4W		
R 5	CF,(ARD25T472J)	4.7kΩ,+5%,1/4W		
R 6	CF,(ARD25T221J)	220Ω,±5%,1/4W		
R 7	CF,(ARD25T681J)	680Ω,±5%,1/4W		
R 8	CF,(ARD25T510J)	51Ω,+5%,1/4W		

( ): Manufacturer's part number
* : Selected at factory

44W83072 2/2

Parts List : T-Z1(Z12) MAIN LOOP (U2) 14

CKT REF	DESCRIPTION	RATING		NOTE
C 1	Cer,(CK924C1H103M)	0.01μF,±20%,50V		
C 2	Cer,(CK924C1H103M)	0.01μF,±20%,50V		
C 3	Cer,(CK924C1H103M)	0.01μF,±20%,50V		
C 4	Cer,(CK924C1H103M)	0.01μF,±20%,50V		
C 5	Cer,(CK924C1H103M)	0.01μF,±20%,50V		
C 6	Elect,(CE04W1A101)	100μ,±20%,10V		
C 7	Cer,(CK924C1H103M)	0.01μF,±20%,50V		
C 8	Elect,(CE04W1A101)	100μ,±20%,10V		
C 9	Elect,(CE04W1A101)	100μ,±20%,10V		
C10	Cer,(CK732B1H103K)	0.01μF,±10%,50V		
C11	Cer,(CK45B1H102KY)	1000pF,±10%,50V		
C12	Cer,(CK45B1H102KY)	1000pF,±10%,50V		
C13	Cer,(CK924C1H103M)	0.01μF,±20%,50V		
C14	Cer,(CK924C1H103M)	0.01μF,±20%,50V		
C15	Not assigned			
C16	Not assigned			
C17	Cer,(CC924C1H101J)	100pF,+5%,50V		
C18	Tant,(CS-E1D2R2M)	2.2μF,±20%,20V		
C19	Tant,(CS-E1D2R2M)	2.2μF,±20%,20V		
C20	Elect,(CE04W1V100)	10μF,±20%,35V		
C21	Elect,(CE04W1V100)	10μF,±20%,35V		
C22	Elect,(CE04W1V100)	10μF,±20%,35V		
C23	Elect,(CE04W1V100)	10μF,±20%,35V		
C24	Cer,(CK732B1H103K)	0.01μF,±10%,50V		
C25	Elect,(CE04W1E470)	47μF,+20%,25V		
C26	Elect,(CE04W1E470)	47μF,±20%,25V		
C27	Cer,(CK732B1H103K)	0.01μF,±10%,50V		
C28	Cer,(CK732B1H103K)	0.01μF,±10%,50V		
C29	Elect,(CE04W1E470)	47μF,+20%,25V		
C30	Elect,(CE04W1E470)	47μF,+20%,25V		
C31	Cer,(CK732B1H103K)	0.01μF,±10%,50V		
C32	Cer,(CK732B1H103K)	0.01μF,±10%,50V		
C33	Elect,(CE04W1V100)	10μF,±20%,35V		
C34	Elect,(CE04W1V100)	10μF,±20%,35V		
C35	Cer,(CK732B1H103K)	0.01μF,±10%,50V		
C36	Cer,(CK732B1H103K)	0.01μF,±10%,50V		
C37	Elect,(SME6.3VB-1000(M))	1000μF,±20%,6.3V		
J 1	Plug, (DF1-8P2.5DSA)			

( ): Manufacturer's part number
* : Selected at factory

44W83073 1/2

Parts List : T-Z1(Z12) MAIN LOOP (U2) 14

CKT REF	DESCRIPTION	RATING		NOTE
L 1	Coil,(LF8-221K)			
L 2	Coil,(LF8-221K)			
L 3	Coil,(LF8-100K)			
L 4	Coil,(LF8-100K)			
L 5	Coil,(LF8-100K)			
L 6	Coil,(LF8-100K)			
Q 1	IC,(MC74HC393N)			
Q 2	IC,(MC4044P)			
Q 3	IC,(MC4044P)			
Q 4	IC,(MC145157P)			
Q 5	IC,(μPB566C)			
Q 6	IC,(μPC1651G)			
Q 7	IC,(NJM5532D)			
Q 8	IC,(NJM5532D)			
Q 9	IC,(HI1-201-5)			
R 1	MF,(RM73B2B102JD)	1kΩ,±5%,1/8W		
R 2	MF,(RM73B2B332JD)	3.3kΩ,±5%,1/8W		
R 3	MF,(RM73B2B102JD)	1kΩ,±5%,1/8W		
R 4	MF,(RM73B2B102JD)	1kΩ,±5%,1/8W		
R 5	MF,(RM73B2B471JD)	470Ω,±5%,1/8W		
R 6	MF,(RM73B2B122JD)	1.2kΩ,±5%,1/8W		
R 7	MF,(RM73B2B560JD)	56Ω,±5%,1/8W		
R 8	MF,(RM73B2B471JD)	470Ω,±5%,1/8W		
R 9	MF,(RM73B2B472JD)	4.7kΩ,±5%,1/8W		
R10	MF,(RM73B2B472JD)	4.7kΩ,±5%,1/8W		
R11	MF,(RM73B2B223JD)	22kΩ,±5%,1/8W		
R12	Not assigned			
R13	Not assigned			
R14	MF,(RM73B2B223JD)	22kΩ,±5%,1/8W		
Z 1	Mixer,(M8)			

( ): Manufacturer's part number
* : Selected at factory

44W83073 2/2

Parts List : T-Z1(Z13) MAIN VCO (U2) 15

CKT REF	DESCRIPTION	RATING		NOTE
C 1	Tant,(CS-E1V2R2M)	2.2μF,±20%,35V		
C 2	Cer,(CC732CH1H080D)	8pF,±0.5pF,50V		
C 3	Cer,(CC732CK1H020C)	2pF,±0.25pF,50V		
C 4	Cer,(CC732CH1H040D)	4pF,±0.5pF,50V		
C 5	Cer,(CC732CH1H030C)	3pF,±0.25pF,50V		
C 6	Cer,(CK732B1H102K)	1000pF,±10%,50V		
C 7	Cer,(CC732CK1H020C)	2pF,±0.25pF,50V		
C 8	Cer,(CC732CH1H040D)	4pF,±0.5pF,50V		
C 9	Cer,(CK732B1H102K)	1000pF,±10%,50V		
C10	Cer,(CK732B1H102K)	1000pF,±10%,50V		
C11	Cer,(CC732CH1H120J)	12pF,±5%,50V		
C12	Cer,(CC732CH1H040D)	4pF,±0.5pF,50V		
C13	Cer,(CC732CJ1H030C)	3pF,±0.25pF,50V		
C14	Cer,(CC732CH1H050D)	5pF,±0.5pF,50V		
C15	Cer,(CK732B1H102K)	1000pF,±10%,50V		
C16	Cer,(CC732CK1H030C)	3pF,±0.25pF,50V		
C17	Cer,(CC732CH1H060D)	6pF,±0.5pF,50V		
C18	Cer,(CK732B1H102K)	1000pF,±10%,50V		
C19	Cer,(CK732B1H102K)	1000pF,±10%,50V		
C20	Cer,(CC732CH1H100D)	10pF,±0.5pF,50V		
C21	Cer,(CC732CH1H180J)	18pF,±5%,50V		
C22	Cer,(CC732CH1H270J)	27pF,±5%,50V		
C23	Cer,(CK732B1H102k)	1000pF,±10%,50V		
C24	Not assigned			
C25	Cer,(CC732CH1H150J)	15pF,±5%,50V		
C26	Cer,(CK732B1H102k)	1000pF,±10%,50V		
C27	Not assigned			
C28	Cer,(CK732B1H102k)	1000pF,±10%,50V		
C29	Elect,(CE04W1J100)	10μF,±20%,63V		
C30	Elect,(CE04W1J100)	10μF,±20%,63V		
C31	Cer,(CK732B1H103K)	0.01μF,±10%,50V		
C32	Not assigned			
C33	Cer,(CK732B1H103K)	0.01μF,±10%,50V		
C34	Cer,(CK732B1H103K)	0.01μF,±10%,50V		
C35	Elect,(CE04W1J100)	10μF,±20%,63V		
C36	Cer,(CK732B1H103K)	0.01μF,±10%,50V		
C37	Cer,(CK732B1H103K)	0.01μF,±10%,50V		
C38	Elect,(CE04W1J100)	10μF,±20%,63V		
C39	Cer,(CK732B1H103K)	0.01μF,±10%,50V		
C40	Cer,(CK732B1H103K)	0.01μF,±10%,50V		
C41	Cer,(CK732B1H103K)	0.01μF,±10%,50V		
C42	Elect,(CE04W1J100)	10μF,±20%,63V		
C43	Cer,(CK732B1H103K)	0.01μF,±10%,50V		
C44	Cer,(CK732B1H103K)	0.01μF,±10%,50V		
C45	Elect,(CE04W1J100)	10μF,±20%,63V		

( ): Manufacturer's part number
* : Selected at factory

44W83074 1/5

Parts List : T-Z1(Z13) MAIN VCO (U2) 15

CKT REF	DESCRIPTION	RATING		NOTE
C46	Cer,(CK732B1H103K)	0.01μF,±10%,50V		
C47	Cer,(CK732B1H103K)	0.01μF,±10%,50V		
C48	Cer,(CK732B1H103K)	0.01μF,±10%,50V		
C49	Cer,(CK732B1H103K)	0.01μF,±10%,50V		
C50	Cer,(CK732B1H103K)	0.01μF,±10%,50V		
C51	Cer,(CK732B1H103K)	0.01μF,±10%,50V		
C52	Cer,(CK732B1H103K)	0.01μF,±10%,50V		
C53	Not assigned			
C54	Cer,(CK732B1H103K)	0.01μF,±10%,50V		
C55	Cer,(CK732B1H103K)	0.01μF,±10%,50V		
C56	Cer,(CK732B1H103K)	0.01μF,±10%,50V		
C57	Cer,(CK732B1H103K)	0.01μF,±10%,50V		
C58	Cer,(CK732B1H103K)	0.01μF,±10%,50V		
C59	Cer,(CK732B1H103K)	0.01μF,±10%,50V		
C60	Cer,(CC732CH1H100D)	10pF,±0.5pF,50V		
C61	Cer,(CC732CH1H100D)	10pF,±0.5pF,50V		
C62	Cer,(CK732B1H103K)	0.01μF,±10%,50V		
C63	Cer,(CK732B1H103K)	0.01μF,±10%,50V		
C64	Cer,(CK732B1H103K)	0.01μF,±10%,50V		
C65	Not assigned			
C66	Not assigned			
C67	Not assigned			
C68	Not assigned			
C69	Not assigned			
C70	Cer,(CK732CJ1H030C)	3pF,±0.25pF,50V		
C71	Cer,(CK732CK1H010C)	1pF,±0.25pF,50V		
C72	Cer,(CK732CK1H020C)	2pF,±0.25pF,50V		
C73	Cer,(CK732CK1H010C)	1pF,±0.25pF,50V		
C74	Cer,(CK732CK1H010C)	1pF,±0.25pF,50V		
C75	Cer,(CK732CH1H050D)	5pF,±0.5pF,50V		
L 1	Semirigid coil, (34L74455)			
L 2	Semirigid coil (34L74455B)			
L 3	Semirigid coil, (34L74455C)			
L 4	Coil,(LF8-221K)	220μH		
L 5	Coil,(LF8-221K)	220μH		
L 6	Not assigned			
L 7	Coil,(LF8-221K)	220μH		
L 8	Not assigned			
L 9	Coil,(LF8-221K)	220μH		
L10	Coil,(342L62001)			

( ): Manufacturer's part number
* : Selected at factory

44W83074 2/5

Parts List : T-Z1(Z13) MAIN VCO (U2) 15

CKT REF	DESCRIPTION	RATING		NOTE
L11	Coil,(342L62001)			
L12	Coil,(342L62001)			
L13	Coil,(442T40126)	40μH		
L14	Coil,(34L74433B)	18nH		
Q 1	Di,(1S2208)			
Q 2	Di,(1S2208)			
Q 3	Tr,(2SC2369)			
Q 4	Tr,(2SC2369)			
Q 5	Di,(1S2208)			
Q 6	Di,(1S2208)			
Q 7	Tr,(2SC2369)			
Q 8	Tr,(2SC2369)			
Q 9	Di,(1SV50)			
Q10	Di,(1SV50)			
Q11	Di,(1SV50)			
Q12	Di,(1S2208)			
Q13	Di,(1S2208)			
Q14	Di,(1S2208)			
Q15	Tr,(2SC2369)			
Q16	Tr,(2SC2369)			
Q17	Photocoupler, (TLP521-1)			
Q18	Photocoupler, (TLP521-1)			
Q19	Photocopuple, (TLP521-1)			
Q20	Tr,(2SC1623)			
Q21	Tr,(2SC1623)			
Q22	Tr,(2SC1623)			
Q23	Not assigned			
Q24	Not assigned			
Q25	IC,(79606)			
Q26	IC,(μPC1651G)			
Q27	IC,(μPC1651G)			
Q28	IC,(μPC1654A)			
Q29	Not assigned			
Q30	Not assigned			
Q31	Di,(1S2208)			
Q32	Tr,(2SC3358)			
Q33	Tr,(2SC2369)			
Q34	Tr,(2SC2369)			
Q35	Tr,(2SC2369)			
Q36	Di,breakdown,(RD5.1EB)	4.8 to 5.4V,400mW		

( ): Manufacturer's part number
* : Selected at factory

44W83074 3/5

Parts List : T-Z1(Z13) MAIN VCO (U2) 15

CKT REF	DESCRIPTION	RATING		NOTE
R 1	MF,(RM73B2B102JD)	1kΩ,±5%,1/8W		
R 2	MF,(RM73B2B4R7JD)	4.7Ω,±5%,1/8W		
R 3	Not assigned			
R 4	MF,(RM73B2B102JD)	1kΩ,±5%,1/8W		
R 5	MF,(RM73B2B681JD)	680Ω,±5%,1/8W		
R 6	MF,(RM73B2B681JD)	680Ω,±5%,1/8W		
R 7	MF,(RM73B2B332JD)	3.3kΩ,±5%,1/8W		
R 8	MF,(RM73B2B472JD)	4.7kΩ,±5%,1/8W		
R 9	MF,(RM73B2B103JD)	10kΩ,±5%,1/8W		
R10	MF,(RM73B2B103JD)	10kΩ,±5%,1/8W		
R11	MF,(RM73B2B * JD)	0 to 100Ω,±5%,1/8W		*
R12	MF,(RM73B2B681JD)	680Ω,±5%,1/8W		
R13	MF,(RM73B2B681JD)	680Ω,±5%,1/8W		
R14	Not assigned			
R15	Not assigned			
R16	MF,(RM73B2B102JD)	1kΩ,±5%,1/8W		
R17	MF,(RM73B2B681JD)	680Ω,±5%,1/8W		
R18	MF,(RM73B2B681JD)	680Ω,±5%,1/8W		
R19	MF,(RM73B2B332JD)	3.3kΩ,±5%,1/8W		
R20	MF,(RM73B2B472JD)	4.7kΩ,±5%,1/8W		
R21	MF,(RM73B2B103JD)	10kΩ,±5%,1/8W		
R22	MF,(RM73B2B103JD)	10kΩ,±5%,1/8W		
R23	MF,(RM73B2B * JD)	0 to 100Ω,±5%,1/8W		*
R24	MF,(RM73B2B681JD)	680Ω,±5%,1/8W		
R25	MF,(RM73B2B681JD)	680Ω,±5%,1/8W		
R26	Not assigned			
R27	Not assigned			
R28	MF,(RM73B2B102JD)	1kΩ,±5%,1/8W		
R29	MF,(RM73B2B681JD)	680Ω,±5%,1/8W		
R30	MF,(RM73B2B681JD)	680Ω,±5%,1/8W		
R31	MF,(RM73B2B332JD)	3.3kΩ,±5%,1/8W		
R32	MF,(RM73B2B472JD)	4.7kΩ,±5%,1/8W		
R33	MF,(RM73B2B103JD)	10kΩ,±5%,1/8W		
R34	MF,(RM73B2B103JD)	10kΩ,±5%,1/8W		
R35	MF,(RM73B2B * JD)	0 to 100Ω,±5%,1/8W		*
R36	MF,(RM73B2B681JD)	680Ω,±5%,1/8W		
R37	MF,(RM73B2B681JD)	680Ω,±5%,1/8W		
R38	Not assigned			
R39	Not assigned			
R40	MF,(RM73B2B103JD)	10kΩ,±5%,1/8W		
R41	MF,(RM73B2B471JD)	470Ω,±5%,1/8W		
R42	MF,(RM73B2B471JD)	470Ω,±5%,1/8W		
R43	MF,(RM73B2B103JD)	10kΩ,±5%,1/8W		
R44	MF,(RM73B2B471JD)	470Ω,±5%,1/8W		
R45	MF,(RM73B2B103JD)	10kΩ,±5%,1/8W		

( ): Manufacturer's part number
* : Selected at factory

44W83074 4/5

Parts List : T-Z1(Z13) MAIN VCO (U2) 15

CKT REF	DESCRIPTION	RATING		NOTE
R46	Not assigned			
R47	Not assigned			
R48	Not assigned			
R49	Not assigned			
R50	Not assigned			
R51	Not assigned			
R52	Not assigned			
R53	MF,(RM73B2B220JD)	22Ω,±5%,1/8W		
R54	MF,(RM73B2B220JD)	22Ω,±5%,1/8W		
R55	MF,(RM73B2B151JD)	150Ω,±5%,1/8W		
R56	MF,(RM73B2B390JD)	39Ω,±5%,1/8W		
R57	MF,(RM73B2B151JD)	150Ω,±5%,1/8W		
R58	MF,(RM73B2B150JD)	15Ω,±5%,1/8W		
R59	MF,(RM73B2B150JD)	15Ω,±5%,1/8W		
R60	MF,(RM73B2B221JD)	220Ω,±5%,1/8W		
R61	MF,(RM73B2B221JD)	220Ω,±5%,1/8W		
R62	MF,(RM73B2B221JD)	220Ω,±5%,1/8W		
R63	MF,(RM73B2B680JD)	68Ω,±5%,1/8W		
R64	MF,(RM73B2B101JD)	100Ω,±5%,1/8W		
R65	MF,(RM73B2B * JD)	0 to 150Ω,±5%,1/8W		*
R66	MF,(RM73B2B102JD)	1kΩ,±5%,1/8W		
R67	MF,(RM73B2B221JD)	220Ω,±5%,1/8W		
R68	MF,(RM73B2B472JD)	4.7kΩ,±5%,1/8W		
R69	MF,(RM73B2B471JD)	470Ω,±5%,1/8W		
R70	Not assigned			
R71	MF,(RM73B2B * JD)	0 to 150Ω,±5%,1/8W		*
R72	MF,(RM73B2B102JD)	1kΩ,±5%,1/8W		
R73	MF,(RM73B2B * JD)	0 to 150Ω,±5%,1/8W		*
R74	MF,(RM73B2B102JD)	1kΩ,±5%,1/8W		
R75	MF,(RM73B2B221JD)	220Ω,±5%,1/8W		
R76	MF,(RM73B2B * JD)	0 to 100Ω,±5%,1/8W		*
R77	Not assigned			
R78	Not assigned			
R79	Not assigned			
R80	MF,(RM73B2B221JD)	220Ω,±5%,1/8W		
R81	MF,(RM73B2B221JD)	220Ω,±5%,1/8W		
R82	MF,(RM73B2B101JD)	100Ω,±5%,1/8W		
R83	MF,(RM73B2B101JD)	100Ω,±5%,1/8W		
R84	MF,(RM73B2B510JD)	51Ω,±5%,1/8W		
R85	MF,(RM73B2B101JD)	100Ω,±5%,1/8W		
R86	MF,(RM73B2B101JD)	100Ω,±5%,1/8W		
R87	MF,(RM73B2B331JD)	330Ω,±5%,1/8W		
R88	MF,(RM73B2B510JD)	51Ω,±5%,1/8W		
R89	MF,(RM73B2B510JD)	51Ω,±5%,1/8W		
R90	MF,(RM73B2B331JD)	330Ω,±5%,1/8W		
R91	MF,(RM73B2B331JD)	330Ω,±5%,1/8W		

( ): Manufacturer's part number
* : Selected at factory

44W83074 5/5

Parts List T-Z1(Z14) MAIN MIX 1 (U2)

CKT REF	DESCRIPTION	RATING		NOTE
C 1	Cer,(CC732CH220J)	22pF,±5%,50V		
C 2	Cer,(CC732CH390J)	39pF,±5%,50V		
C 3	Cer,(CC732CH220J)	22pF,±5%,50V		
C 4	Cer,(CK732B1H102KY)	1000pF,±10%,50V		
C 5	Cer,(CK732B1H102KY)	1000pF,±10%,50V		
C 6	Cer,(CK732B1H103K)	0.01μF,±10%,50V		
C 7	Elect,(CE04W1A101)	100μF,±20%,10V		
C 8	Elect,(CE04W1A101)	100μF,±20%,10V		
C 9	Cer,(CK732B1H103K)	0.01μF,±10%,50V		
C10	Cer,(CC45CH1H080DY)	8pF,±0.5pF,50V		
C11	Cer,(CC732CK1H020C)	2pF,±0.25pF,50V		
C12	Cer,(CC45CJ1H030CY)	3pF,±0.25pF,50V		
C13	Cer,(CC45CH1H470JY)	47pF,±5%,50V		
C14				
L 1	Coil,(34L74431E)	70nH		
L 2	Coil,(34L74431E)	70nH		
Q 1	IC,(μPC1651G)			
R 1	CF,(ARD25T * J)	10k to 1MΩ,±5%,1/4W		Q'ty 0 or 1, *
R 2	CF,(ARD25T470J)	47Ω,±5%,1/4W		
Z 1	Mixer,(M18X)			

( ): Manufacturer's part number
* : Selected at factory

44W83075 1/1

CKT REF	DESCRIPTION	RATING		NOTE
C 1	Cer,(CC924CH1H151J)	150pF,±5%,50V		
C 2	Cer,(CC924CH1H271J)	270pF,±5%,50V		
C 3	Cer,(CC924CH1H271J)	270pF,±5%,50V		
C 4	Cer,(CC924CH1H151J)	150pF,±5%,50V		
C 5	Cer,(CK45B1H102KY)	1000pF,±10%,50V		
C 6	Cer,(CK45B1H102KY)	1000pF,±10%,50V		
C 7	Cer,(CK732B1H103K)	0.01μF,±10%,50V		
C 8	Elect,(CE04W1A101)	100μF,±20%,10V		
C 9	Elect,(CE04W1V100)	10μF,±20%,35V		
C10	Cer,(CK732B1H103K)	0.01μF,±10%,50V		
L 1	Coil,(SP0408-R47K)	0.47μH		
L 2	Coil,(SP0408-R47K)	0.47μH		
L 3	Coil,(SP0408-R47K)	0.47μH		
Q 1	IC,(μPC1651G)			
R 1	CF,(ARD25T * J)	10k to 1MΩ,±5%,1/4W		Q'ty 0 or 1, *
R 2	CF,(ARD25T470J)	47Ω,±5%,1/4W		
Z 1	Mixer,(M-8)			

( ): Manufacturer's part number
* : Selected at factory

44W83076 1/1

Parts List : T-Z1(Z16) U2 MOTHER BOARD (U2) 18

CKT REF	DESCRIPTION	RATING		NOTE
C 1	Cer,(CK924C1H103M)	0.01μF,±20%,50V		
C 2	Elect,(CE04W1A101)	100μF,±20%,10V		
C 3	Elect,(CE04W1A101)	100μF,±20%,10V		
C 4	Cer,(CK924C1H103M)	0.01μF,±20%,50V		
C 5	Cer,(CK924C1H103M)	0.01μF,±20%,50V		
C 6	Cer,(CK924C1H103M)	0.01μF,±20%,50V		
J 1	Plug,(DF1-15P2.5DS)			
J 2	Plug,(DF1-2P2.5DS)			
J 3	Plug,(DF1-3P2.5DS)			
J 4	Plug,(DF1-8P2.5DS)			
J 5	Plug,(DF1-8P2.5DS)			
J 6	Plug,(DF1-8P2.5DS)			
J 7	Plug,(DF1-8P2.5DS)			
J 8	Plug,(DF1-8P2.5DS)			
J 9	Plug,(DF1-8P2.5DS)			
L 1	Coil,(SP04086R8)	6.8μH		
Q 1	IC,(MC74HC14)			
Q 2	IC,(MC74HC14)			
Q 3	IC,(MC74HC595)			
R 1	Single in-line array, (IHR-6-103JA)	10kΩ x 6,1/8W		

( ) : Manufacturer's part number
* : Selected at factory

44W83077 1/1

Parts List : T-Z1(Z17) U2 SIGNAL SUPPLY (U2) 19

CKT REF	DESCRIPTION	RATING		NOTE
J 1	Plug, (CNF3-20P-2.54DSA)			

( ) : Manufacturer's part number
* : Selected at factory

44W83078 1/1

Parts List : T-Z2 PATTERN GENERATOR I 20

CKT REF	DESCRIPTION	RATING		NOTE
C 1	Elect,(CE04W1A470)	47μF,±20%,10V		
C 2	Elect,(CE04W1A470)	47μF,±20%,10V		
C 3	Elect,(CE04W1A470)	47μF,±20%,10V		
C 4	Elect,(CE04W1A470)	47μF,±20%,10V		
C 5	Cer,(CK924F1H104Z)	0.1μF,+80/-20%,50V		
C 6	Cer,(CK924F1H104Z)	0.1μF,+80/-20%,50V		
C 7	Cer,(CK924F1H104Z)	0.1μF,+80/-20%,50V		
C 8	Not assigned			
C 9	Cer,(CK924F1H104Z)	0.1μF,+80/-20%,50V		
C10	Cer,(CK924F1H104Z)	0.1μF,+80/-20%,50V		
C11	Not assigned			
C12	Not assigned			
C13	Not assigned			
C14	Cer,(CK924F1H104Z)	0.1μF,+80/-20%,50V		
C15	Not assigned			
C16	Not assigned			
C17	Not assigned			
C18 to C34	Cer,(CK924F1H104Z)	0.1μF,+80/-20%,50V		
C35	Not assigned			
C36	Cer,(CK924F1H104Z)	0.1μF,+80/-20%,50V		
C37	Elect,(CE02W1A102)	1000μF,±20%,10V		
C38 to C59	Cer,(CK924F1H104Z)	0.1μF,+80/-20%,50V		
C60	Not assigned			
C61 to C75	Cer,(CK924F1H104Z)	0.1μF,+80/-20%,50V		
C76	Cer,(CC45CK1H * CY)	0.5 to 2pF,±0.25pF, 50V		Q'ty 0 or 3, *
J 1	Pattern			
J 2	Receptacle,(HRM-301B)			
J 3	Receptacle, (27DP-R-PC-1)			
J 4	Receptacle, (27DP-R-PC-1)			
J 5	Receptacle, (27DP-R-PC-1)			
L 1	Coil,(LH1-102K)	1mH		

( ) : Manufacturer's part number
* : Selected at factory

44W83023 1/5

Parts List : T-Z2 PATTERN GENERATOR I 20

CKT REF	DESCRIPTION	RATING		NOTE
Q 1	IC,(74LS139)			
Q 2	IC,(74LS244)			
Q 3	IC,(74LS244)			
Q 4	IC,(74LS244)			
Q 5	IC,(74LS32)			
Q 6	IC,(74LS273)			
Q 7	IC,(HD10124)			
Q 8	IC,(HD10124)			
Q 9	IC,(μPD8253C-2)			
Q10	IC,(74LS273)			
Q11	IC,(HD10124)			
Q12	IC,(HD10124)			
Q13	IC,(74LS10)			
Q14	IC,(74LS390)			
Q15	IC,(HD10124)			
Q16	IC,(HD10124)			
Q17	IC,(HD10124)			
Q18	Not assigned			
Q19	IC,(HD10131)			
Q20	IC,(HD10125)			
Q21	IC,(HD10131)			
Q22	IC,(HD10124)			
Q23	IC,(HD10124)			
Q24	IC,(HD10131)			
Q25	IC,(F100155)			
Q26	IC,(F100155)			
Q27	IC,(HM10422-7)			
Q28	IC,(HM10422-7)			
Q29	IC,(HD100102)			
Q30	IC,(HM10422-7)			
Q31	IC,(HM10422-7)			
Q32	IC,(HD100102)			
Q33	IC,(F100136)			
Q34	IC,(F100136)			
Q35	IC,(HD100102)			
Q36	IC,(F100131)			
Q37	Di,(1S953)			
Q38	Di,(1S953)			
Q39	Di,(1S953)			
Q40	Di,(1S953)			
Q41	Di,(1S953)			
Q42	IC,(μPB581C)			
Q43	IC,(μPA102G)			
Q44	IC,(μPB581C)			
Q45	Tr,(2SC2369)			

( ) : Manufacturer's part number
* : Selected at factory

44W83023 2/5

Parts List : T-Z2 PATTERN GENERATOR I 20

CKT REF	DESCRIPTION	RATING		NOTE
Q46	Tr,(2SC2369)			
Q47	IC,(μPA102G)			
R 1	Not assigned			
R 2	CF,(ERD10TJ471A)	470Ω,±5%,1/8W		
R 3	CF,(ERD10TJ471A)	470Ω,±5%,1/8W		
R 4	CF,(ERD10TJ471A)	470Ω,±5%,1/8W		
R 5	CF,(ERD10TJ471A)	470Ω,±5%,1/8W		
R 6	CF,(ERD10TJ471A)	470Ω,±5%,1/8W		
R 7	CF,(ERD10TJ271A)	270Ω,±5%,1/8W		
R 8	CF,(ERD10TJ181A)	180Ω,±5%,1/8W		
R 9	CF,(ARD25T331J)	330Ω,±5%,1/4W		
R10	CF,(ARD25T472J)	4.7kΩ,±5%,1/4W		
R11	CF,(ARD25T471J)	470Ω,±5%,1/4W		
R12	CF,(ARD25T472J)	4.7kΩ,±5%,1/4W		
R13	CF,(ARD25T471J)	470Ω,±5%,1/4W		
R14	CF,(ARD25T330J)	33Ω,±5%,1/4W		
R15	CF,(ERD10TJ181A)	180Ω,±5%,1/8W		
R16	CF,(ERD10TJ271A)	270Ω,±5%,1/8W		
R17	CF,(ERD10TJ471A)	470Ω,±5%,1/8W		
R18	Single in-line array, (IHR-4-18JA)	180Ω x 4,1/8W		
R19	CF,(ERD10TJ181A)	180Ω,±5%,1/8W		
R20	CF,(ERD10TJ221A)	220Ω,±5%,1/8W		
R21	Single in-line array, (IHR-4-181JA)	180Ω x 4,1/8W		
R22	Single in-line array, (IHR-4-181JA)	180Ω x 4,1/8W		
R23	CF,(ERD10TJ181A)	180Ω,±5%,1/8W		
R24	CF,(ERD10TJ221A)	220Ω,±5%,1/8W		
R25	Single in-line array, (IHR-4-181JA)	180Ω x 4,1/8W		
R26	Single in-line array, (IHR-6-471JA)	470Ω x 6,1/8W		
R27	Single in-line array, (IHR-4-471JA)	470Ω x 4,1/8W		
R28	CF,(ARD25T121J)	120Ω,±5%,1/4W		
R29	CF,(ERD10TJ101A)	100Ω,±5%,1/8W		
R30	Single in-line array, (IHR-6-331JA)	330Ω x 6,1/8W		
R31	Single in-line array, (IHR-4-102JA)	1kΩ x 4,1/8W		
R32	Single in-line array, (IHR-8-471JA)	470Ω x 8,1/8W		

( ): Manufacturer's part number
* : Selected at factory

Parts List : T-Z2 PATTERN GENERATOR I 20

CKT REF	DESCRIPTION	RATING		NOTE
R36	CF,(ERD10TJ471A)	470Ω,±5%,1/8W		
R37	CF,(ERD10TJ102A)	1kΩ,±5%,1/8W		
R38	CF,(ERD10TJ151A)	150Ω,±5%,1/8W		
R39	CF,(ERD10TJ181A)	180Ω,±5%,1/8W		
R40	Single in-line array, (IHR-4-102JA)	1kΩ x 4,1/8W		
R41	Single in-line array, (IHR-4-102JA)	1kΩ x 4,1/8W		
R42	CF,(ERD10TJ181A)	180Ω,±5%,1/8W		
R43	CF,(ERD10TJ221A)	220Ω,±5%,1/8W		
R44	CF,(ERD10TJ271A)	270Ω,±5%,1/8W		
R45	CF,(ERD10TJ221A)	220Ω,±5%,1/8W		
R46	CF,(ERD10TJ181A)	180Ω,±5%,1/8W		
R47	CF,(ERD10TJ471A)	470Ω,±5%,1/8W		
R48	CF,(ERD10TJ102A)	1kΩ,±5%,1/8W		
R49	CF,(ERD10TJ151A)	150Ω,±5%,1/8W		
R50	CF,(ERD10TJ181A)	180Ω,±5%,1/8W		
R51	CF,(ERD10TJ471A)	470Ω,±5%,1/8W		
R52	CF,(ERD10TJ101A)	100Ω,±5%,1/8W		
R53	CF,(ARD25T121J)	120Ω,±5%,1/4W		
R54	CF,(ERD10TJ510A)	51Ω,±5%,1/8W		
R55	CF,(ARD25T181J)	180Ω,±5%,1/4W		
R56	CF,(ARD25T221J)	220Ω,±5%,1/4W		
R57	CF,(ARD25T331J)	330Ω,±5%,1/4W		
R58	CF,(ARD25T * J)	51Ω to 2.2kΩ,±5%, 1/4W		Q'ty 1 to 3, *
R59	CF,(ERD10TJ510A)	51Ω,±5%,1/8W		
R60	CF,(ERD10TJ221A)	220Ω,±5%,1/8W		
R61	CF,(ERD10TJ510A)	51Ω,±5%,1/8W		
R62	CF,(ERD10TJ101A)	100Ω,±5%,1/8W		
R63	CF,(ERD10TJ151A)	150Ω,±5%,1/8W		
R64	CF,(ERD10TJ510A)	51Ω,±5%,1/8W		
R65	CF,(ERD10TJ221A)	220Ω,±5%,1/8W		
R66	CF,(ERD10TJ510A)	51Ω,±5%,1/8W		
R67	CF,(ERD10TJ151A)	150Ω,±5%,1/8W		
R68	CF,(ERD10TJ101A)	100Ω,±5%,1/8W		
R69	CF,(ERD10TJ510A)	51Ω,±5%,1/8W		
R70	CF,(ERD10TJ510A)	51Ω,±5%,1/8W		
R71	CF,(ERD10TJ221A)	220Ω,±5%,1/8W		
R72	CF,(ERD10TJ221A)	220Ω,±5%,1/8W		
R73	CF,(ARD25T131J)	130Ω,±5%,1/4W		
R74	CF,(ERD10TJ820A)	82Ω,±5%,1/8W		
R75	CF,(ERD10TJ331A)	330Ω,±5%,1/8W		

( ): Manufacturer's part number
* : Selected at factory

Parts List : T-Z2 PATTERN GENERATOR I 20

CKT REF	DESCRIPTION	RATING		NOTE
R76	CF,(ERD10TJ181A)	180Ω,±5%,1/8W		
R77	CF,(ERD10TJ101A)	100Ω,±5%,1/8W		
R78	CF,(ERD10TJ151A)	150Ω,±5%,1/8W		
R79	Single in-line array, (IHR-4-151JA)	150Ω x 4,1/8W		
R80	Single in-line array, (IHR-4-151JA)	150Ω x 4,1/8W		
R81	Single in-line array, (IHR-4-151JA)	150Ω x 4,1/8W		
R82	Single in-line array, (IHR-4-151JA)	150Ω x 4,1/8W		
R83	CF,(ERD10TJ101A)	100Ω,±5%,1/8W		
R84	CF,(ERD10TJ331A)	330Ω,±5%,1/8W		
R85	CF,(ERD10TJ181A)	180Ω,±5%,1/8W		
R86	CF,(ERD10TJ221A)	220Ω,±5%,1/8W		
R87	CF,(ERD10TJ181A)	180Ω,±5%,1/8W		
R88	CF,(ERD10TJ221A)	220Ω,±5%,1/8W		
R89	CF,(ERD10TJ*A)	2.2 to 6.8Ω,±5%,1/8W		Q'ty 0 o. 3, *
Z 1	Delay line, (IL4-F41 0.3nS)	0.3nS		

( ): Manufacturer's part number
* : Selected at factory

Parts List : T-Z3 PATTERN GENERATOR II 21

CKT REF	DESCRIPTION	RATING		NOTE
C 1	Elect,(CE04C1A330)	33μF,±20%,10V		
C 2	Elect,(CE04C1A330)	33μF,±20%,10V		
C 3	Elect,(CE04C1E330)	33μF,±20%,25V		
C 4 to C23	Cer,(CK924F1H104Z)	0.1μF,+80/-20%,50V		
C24	Cer,(CK924C1H103M)	0.01μF,±20%,50V		
C25 to C76	Cer,(CK924F1H104Z)	0.1μF,+80/-20%,50V		
C77	Not assigned			
C78	Cer,(CK924F1H104Z)	0.1μF,+80/-20%,50V		
C79	Cer,(CK924F1H104Z)	0.1μF,+80/-20%,50V		
C80	Cer,(CK924F1H104Z)	0.1μF,+80/-20%,50V		
C81	Not assigned			
C82	Cer,(CK924F1H104Z)	0.1μF,+80/-20%,50V		
C83	Cer,(CK924F1H104Z)	0.1μF,+80/-20%,50V		
C84	Cer,(CK924F1H104Z)	0.1μF,+80/-20%,50V		
C85	Cer,(CK924F1H104Z)	0.1μF,+80/-20%,50V		
C86	Cer,(CK924F1H104Z)	0.1μF,+80/-20%,50V		
J 1	Pattern			
J 2	Receptacle,(HRM301B)			
J 3	Receptacle, (MP2.5CR-PC)			
J 4	Receptacle, (MP2.5CR-PC)			
J 5	Receptacle, (MP2.5CR-PC)			
J 6	Receptacle, (27DP-R-PC-1)			
J 7	Receptacle, (27DP-R-PC-1)			
J 8	Receptacle, (MP2.5CR-PC)			
Q 1	Tr,(2SC3358)			
Q 2	Tr,(2SC3358)			
Q 3	Tr,(2SC3358)			
Q 4	Tr,(2SC3358)			
Q 5	Tr,(2SC3358)			
Q 6	Tr,(2SC3358)			
Q 7	Tr,(2SC3358)			
Q 8	Tr,(2SC3358)			

( ): Manufacturer's part number
* : Selected at factory

Parts List : T-Z3 PATTERN GENERATOR II 21

CKT REF	DESCRIPTION	RATING		NOTE
Q 9	Not assigned			
Q10	Not assigned			
Q11	Not assigned			
Q12	Not assigned			
Q13	Not assigned			
Q14	Not assigned			
Q15	Not assigned			
Q16	Not assigned			
Q17	Tr,(2SC3358)			
Q18	Tr,(2SC3358)			
Q19	Tr,(2SC3358)			
Q20	Tr,(2SC3358)			
Q21	Tr,(2SC3358)			
Q22	Tr,(2SC3358)			
Q23	Tr,(2SC3358)			
Q24	Tr,(2SC3358)			
Q25	IC,(HD100102)			
Q26	IC,(HD100102)			
Q27	IC,(HD100101)			
Q28	IC,(HD100101)			
Q29	IC,(F100131)			
Q30	IC,(HD100102)			
Q31	Tr,(2SC2369)			
Q32	IC,(μPA102G)			
Q33	IC,(μPB662)			
Q34	Tr,(2SC2369)			
Q35	Tr,(2SC2369)			
Q36	IC,(IIC06)			
Q37	Tr,(2SC2369)			
Q38	Tr,(2SC2369)			
Q39	IC,(SP16F60)			
Q40	IC,(μPA102G)			
Q41	Tr,(2SC2369)			
Q42	IC,(SP16F60)			
Q43	IC,(IIC06)			
Q44	Tr,(2SC2369)			
Q45	Tr,(2SC2369)			
Q46	IC,(F100131)			
Q47	IC,(F100155)			
Q48	Tr,(2SC2369)			
Q49	IC,(HD100102)			
Q50	IC,(F100107)			
Q51	IC,(F100107)			
Q52	Tr,(2SC2369)			
Q53	IC,(ANE101GC01)			

( ): Manufacturer's part number
* : Selected at factory

Parts List : T-Z3 PATTERN GENERATOR II 21

CKT REF	DESCRIPTION	RATING		NOTE
Q54	IC,(F100107)			
Q55	IC,(F100141)			
Q56	IC,(HD10131)			
Q57	IC,(SP16F60)			
Q58	IC,(IIC06)			
Q59	IC,(IIC06)			
R 1	CF,(ERD10TJ330A)	33Ω,±5%,1/8W		
R 2	CF,(ERD10TJ510A)	51Ω,±5%,1/8W		
R 3	CF,(ERD10TJ330A)	33Ω,±5%,1/8W		
R 4	CF,(ERD10TJ510A)	51Ω,±5%,1/8W		
R 5	CF,(ERD10TJ510A)	51Ω,±5%,1/8W		
R 6	CF,(ERD10TJ330A)	33Ω,±5%,1/8W		
R 7	CF,(ERD10TJ510A)	51Ω,±5%,1/8W		
R 8	CF,(ERD10TJ330A)	33Ω,±5%,1/8W		
R 9	CF,(ERD10TJ101A)	100Ω,±5%,1/8W		
R10	CF,(ERD10TJ101A)	100Ω,±5%,1/8W		
R11	MF,(RN14K2H151J)	150Ω,±5%,1/2W		
R12	CF,(ERD10TJ101A)	100Ω,±5%,1/8W		
R13	CF,(ERD10TJ101A)	100Ω,±5%,1/8W		
R14	MF,(RN14K2H151J)	150Ω,±5%,1/2W		
R15	CF,(ERD10TJ101A)	100Ω,±5%,1/8W		
R16	CF,(ERD10TJ101A)	100Ω,±5%,1/8W		
R17	MF,(RN14K2H151J)	150Ω,±5%,1/2W		
R18	CF,(ERD10TJ101A)	100Ω,±5%,1/8W		
R19	CF,(ERD10TJ101A)	100Ω,±5%,1/8W		
R20	MF,(RN14K2H151J)	150Ω,±5%,1/2W		
R21	CF,(ARD25T102J)	1kΩ,±5%,1/4W		
R22	CF,(ARD25T102J)	1kΩ,±5%,1/4W		
R23	Var,MF,(RJ-6P 200Ω)	200Ω,1/2W		
R24	CF,(ARD25T102J)	1kΩ,±5%,1/4W		
R25	CF,(ARD25T102J)	1kΩ,±5%,1/4W		
R26	Var,MF,(RJ-6P 200Ω)	200Ω,1/2W		
R27	CF,(ARD25T102J)	1kΩ,±5%,1/4W		
R28	CF,(ARD25T102J)	1kΩ,±5%,1/4W		
R29	Var,MF,(RJ-6P 200Ω)	200Ω,1/2W		
R30	CF,(ARD25T102J)	1kΩ,±5%,1/4W		
R31	CF,(ARD25T102J)	1kΩ,±5%,1/4W		
R32	Var,MF,(RJ-6P 200Ω)	200Ω,1/2W		
R33	CF,(ERD10TJ151A)	150Ω,±5%,1/8W		
R34	CF,(ERD10TJ331A)	330Ω,±5%,1/8W		
R35	CF,(ERD10TJ151A)	150Ω,±5%,1/8W		
R36	CF,(ERD10TJ331A)	330Ω,±5%,1/8W		

( ): Manufacturer's part number
* : Selected at factory

Parts List : T-Z3 PATTERN GENERATOR II 21

CKT REF	DESCRIPTION	RATING		NOTE
R37	CF,(ERD10TJ331A)	330Ω,±5%,1/8W		
R38	CF,(ERD10TJ151A)	150Ω,±5%,1/8W		
R39	CF,(ERD10TJ151A)	150Ω,±5%,1/8W		
R40	CF,(ERD10TJ331A)	330Ω,±5%,1/8W		
R41	CF,(ERD10TJ151A)	150Ω,±5%,1/8W		
R42	CF,(ERD10TJ331A)	330Ω,±5%,1/8W		
R43	CF,(ERD10TJ151A)	150Ω,±5%,1/8W		
R44	CF,(ERD10TJ331A)	330Ω,±5%,1/8W		
R45	CF,(ERD10TJ151A)	150Ω,±5%,1/8W		
R46	CF,(ERD10TJ331A)	330Ω,±5%,1/8W		
R47	CF,(ERD10TJ151A)	150Ω,±5%,1/8W		
R48	CF,(ERD10TJ331A)	330Ω,±5%,1/8W		
R49	CF,(ERD10TJ151A)	150Ω,±5%,1/8W		
R50	CF,(ERD10TJ181A)	180Ω,±5%,1/8W		
R51	CF,(ERD10TJ151A)	150Ω,±5%,1/8W		
R52	CF,(ERD10TJ181A)	180Ω,±5%,1/8W		
R53	CF,(ERD10TJ101A)	100Ω,±5%,1/8W		
R54	CF,(ARD25T121J)	120Ω,±5%,1/4W		
R55	Not assigned			
R56	CF,(ERD10TJ151A)	150Ω,±5%,1/8W		
R57	CF,(ERD10TJ181A)	180Ω,±5%,1/8W		
R58	CF,(ARD25T121J)	120Ω,±5%,1/4W		
R59	CF,(ERD10TJ101A)	100Ω,±5%,1/8W		
R60	CF,(ERD10TJ151A)	150Ω,±5%,1/8W		
R61	CF,(ERD10TJ181A)	180Ω,±5%,1/8W		
R62	CF,(ERD10TJ101A)	100Ω,±5%,1/8W		
R63	CF,(ARD25T121J)	120Ω,±5%,/14W		
R64	CF,(ERD10TJ272A)	2.7kΩ,±5%,1/8W		
R65	CF,(ERD10TJ471A)	470Ω,±5%,1/8W		
R66	Var,MF,(RJ-6P 1kΩ)	1kΩ,1/2W		
R67	CF,(ERD10TJ510A)	51Ω,±5%,1/8W		
R68	Not assigned			
R69	CF,(ERD10TJ151A)	150Ω,±5%,1/8W		
R70	CF,(ERD10TJ181A)	180Ω,±5%,1/8W		
R71	CF,(ERD10TJ151A)	150Ω,±5%,1/8W		
R72	CF,(ERD10TJ181A)	180Ω,±5%,1/8W		
R73	CF,(ERD10TJ151A)	150Ω,±5%,1/8W		
R74	CF,(ERD10TJ181A)	180Ω,±5%,1/8W		
R75	CF,(ERD10TJ151A)	150Ω,±5%,1/8W		
R76	CF,(ERD10TJ181A)	180Ω,±5%,1/8W		
R77	CF,(ERD10TJ331A)	330Ω,±5%,1/8W		
R78	CF,(ERD10TJ331A)	330Ω,±5%,1/8W		
R79	CF,(ERD10TJ101A)	100Ω,±5%,1/8W		
R80	CF,(ARD25T121J)	120Ω,±5%,1/4W		

( ): Manufacturer's part number
* : Selected at factory

Parts List : T-Z3 PATTERN GENERATOR II 21

CKT REF	DESCRIPTION	RATING		NOTE
R81	CF,(ERD10TJ * A)	10 to 220Ω,±5%,1/8W		*
R82	CF,(ERD10TJ510A)	51Ω,±5%,1/8W		
R83	CF,(ERD10TJ331A)	330Ω,±5%,1/8W		
R84	CF,(ERD10TJ510A)	51Ω,±5%,1/8W		
R85	CF,(ERD10TJ101A)	100Ω,±5%,1/8W		
R86	CF,(ARD25T131J)	130Ω,±5%,1/4W		
R87	CF,(ERD10TJ471A)	470Ω,±5%,1/8W		
R88	CF,(ERD10TJ510A)	51Ω,±5%,1/8W		
R89	CF,(ERD10TJ151A)	150Ω,±5%,1/8W		
R90	CF,(ERD10TJ820A)	82Ω,±5%,1/8W		
R91	CF,(ERD10TJ510A)	51Ω,±5%,1/8W		
R92	CF,(ERD10TJ471A)	470Ω,±5%,1/8W		
R93	CF,(ARD25T131J)	130Ω,±5%,1/4W		
R94	CF,(ARD25T131J)	130Ω,±5%,1/4W		
R95	CF,(ERD10TJ820A)	82Ω,±5%,1/8W		
R96	CF,(ERD10TJ181A)	180Ω,±5%,1/8W		
R97	SIL type,(EXB-F4E820J)	82Ω x 4,1/8W		
R98	CF,(ARD25T131J)	130Ω,±5%,1/4W		
R99	CF,(ARD25T131J)	130Ω,±5%,1/4W		
R100	CF,(ERD10TJ101A)	100Ω,±5%,1/8W		
R101	CF,(ARD25T * J)	51 to 220Ω,±5%,1/4W		*
R102	CF,(ARD25T331J)	330Ω,±5%,1/4W		
R103	CF,(ARD25T181J)	180Ω,±5%,1/4W		
R104	CF,(ARD25T221J)	220Ω,±5%,1/4W		
R105	CF,(ERD10TJ510A)	51Ω,±5%,1/8W		
R106	CF,(ERD10TJ471A)	470Ω,±5%,1/8W		
R107	CF,(ERD10TJ510A)	51Ω,±5%,1/8W		*
R108	CF,(ERD10TJ * A)	10 to 220Ω,±5%,1/8W		
R109	CF,(ARD25T131J)	130Ω,±5%,1/4W		
R110	CF,(ERD10TJ101A)	100Ω,±5%,1/8W		
R111	CF,(ERD10TJ510A)	51Ω,±5%,1/8W		
R112	SIL type,(EXB-F4E820J)	82Ω x 4,1/8W		
R113	CF(ERD10TJ181A)	180Ω,±5%,1/8W		
R114	CF,(ERD10TJ820A)	82Ω,±5%,1/8W		
R115	CF,(ARD25T131J)	130Ω,±5%,1/4W		
R116	CF,(ARD25T131J)	130Ω,±5%,1/4W		
R117	CF(ERD10TJ101A)	100Ω,±5%,1/8W		
R118	CF(ERD10TJ680A)	68Ω,±5%,1/8W		
R119	CF(ERD10TJ101A)	100Ω,±5%,1/8W		
R120	CF(ERD10TJ151A)	150Ω,±5%,1/8W		
R121	CF(ERD10TJ * A)	10 to 100Ω,±5%,1/8W		*
R122	CF(ERD10TJ331A)	330Ω,±5%,1/8W		
R123	CF(ERD10TJ * A)	10 to 100Ω,±5%,1/8W		
R124	CF(ARD25T131J)	130Ω,±5%,1/4W		
R125	CF(ERD10TJ820A)	82Ω,±5%,1/8W		

( ): Manufacturer's part number
* : Selected at factory

Parts List : T-Z3 PATTERN GENERATOR II 21

CKT REF	DESCRIPTION	RATING		NOTE
R126	CF,(ERD10TJ820A)	82Ω,±5%,1/8W		
R127	CF,(ERD10TJ181A)	180Ω,±5%,1/8W		
R128	CF,(ERD10TJ101A)	100Ω,±5%,1/8W		
R129	CF,(ERD10TJ510A)	51Ω,±5%,1/8W		
R130	CF,(ERD10TJ680A)	68Ω,±5%,1/8W		
R131	CF,(ERD10TJ151A)	150Ω,±5%,1/8W		
R132	CF,(ERD10TJ101A)	100Ω,±5%,1/8W		
R133	CF,(ERD10TJ510A)	51Ω,±5%,1/8W		
R134	CF,(ERD10TJ471A)	470Ω,±5%,1/8W		
R135	CF,(ERD10TJ471A)	470Ω,±5%,1/8W		
R136	CF,(ERD10TJ471A)	470Ω,±5%,1/8W		
R137	CF,(ERD10TJ820A)	82Ω,±5%,1/8W		
R138	CF,(ARD25T131J)	130Ω,±5%,1/4W		
R139	CF,(ARD25T131J)	130Ω,±5%,1/4W		
R140	CF,(ARD25T131J)	130Ω,±5%,1/4W		
R141	CF,(ARD25T131J)	130Ω,±5%,1/4W		
R142	CF,(ERD10TJ471A)	470Ω,±5%,1/8W		
R143	CF,(ARD25T121J)	120Ω,±5%,1/4W		
R144	CF,(ERD10TJ101A)	100Ω,±5%,1/8W		
R145	CF,(ERD10TJ820A)	82Ω,±5%,1/8W		
R146	CF,(ARD25T131J)	130Ω,±5%,1/4W		
R147	CF,(ERD10TJ181A)	180Ω,±5%,1/8W		
R148	CF,(ARD25T131J)	130Ω,±5%,1/4W		
R149	CF,(ERD10TJ820A)	82Ω,±5%,1/8W		
R150	CF,(ERD10TJ101A)	100Ω,±5%,1/8W		
R151	CF,(ERD10TJ101A)	100Ω,±5%,1/8W		
R152	CF,(ERD10TJ510A)	51Ω,±5%,1/8W		
R153	CF,(ARD25T131J)	130Ω,±5%,1/4W		
R154	CF,(ERD10TJ271A)	270Ω,±5%,1/8W		
R155	Not assigned			
R156	CF,(ARD25T121J)	120Ω,±5%,1/4W		
R157	CF,(ERD10TJ101A)	100Ω,±5%,1/8W		
R158	CF,(ERD10TJ471A)	470Ω,±5%,1/8W		
R159	CF,(ERD10TJ151A)	150Ω,±5%,1/8W		
R160	CF,(ERD10TJ181A)	180Ω,±5%,1/8W		
R161	CF,(ARD25T121J)	120Ω,±5%,1/4W		
R162	CF,(ERD10TJ101A)	100Ω,±5%,1/8W		
R163	CF,(ERD10TJ331A)	330Ω,±5%,1/8W		
R164	CF,(ERD10TJ151A)	150Ω,±5%,1/8W		
R165	CF,(ERD10TJ181A)	180Ω,±5%,1/8W		
R166	Single in-line array, (IHR-4-102JA)	1kΩ x 4,1/8W		
R167	CF,(ARD25T121J)	120Ω,±5%,1/4W		
R168	CF,(ERD10TJ101A)	100Ω,±5%,1/8W		
R169	SIL type,(EXB-F4E181J)	180Ω x 4,1/8W		

( ): Manufacturer's part number
* : Selected at factory

Parts List : T-Z3 PATTERN GENERATOR II 21

CKT REF	DESCRIPTION	RATING		NOTE
R170	SIL type,(EXB-F4E151J)	150Ω x 4,1/8W		
R171	CF,(ERD10TJ181A)	180Ω,±5%,1/8W		
R172	CF,(ERD10TJ151A)	150Ω,±5%,1/8W		
R173	CF,(ERD10TJ181A)	180Ω,±5%,1/8W		
R174	CF,(ERD10TJ151A)	150Ω,±5%,1/8W		
R175	CF,(ERD10TJ181A)	180Ω,±5%,1/8W		
R176	CF,(ERD10TJ151A)	150Ω,±5%,1/8W		
R177	CF,(ERD10TJ181A)	180Ω,±5%,1/8W		
R178	CF,(ERD10TJ151A)	150Ω,±5%,1/8W		
R179	CF,(ARD25T121J)	120Ω,±5%,1/4W		
R180	CF,(ERD10TJ101A)	100Ω,±5%,1/8W		
R181	CF,(ERD10TJ102A)	1kΩ,±5%,1/8W		
R182	CF,(ERD10TJ151A)	150Ω,±5%,1/8W		
R183	CF,(ERD10TJ750A)	75Ω,±5%,1/8W		
R184	SIL type,(EXB-F4E181J)	180Ω x 4,1/8W		
R185	CF,(ERD10TJ151A)	150Ω,±5%,1/8W		
R186	CF,(ERD10TJ181A)	180Ω,±5%,1/8W		
R187	CF,(ERD10TJ151A)	150Ω,±5%,1/8W		
R188	CF,(ERD10TJ331A)	330Ω,±5%,1/8W		
R189	CF,(ERD10TJ331A)	330Ω,±5%,1/8W		
R190	CF,(ARD25T121J)	120Ω,±5%,1/4W		
R191	CF,(ARD25T121J)	120Ω,±5%,1/4W		
R192	CF,(ARD25T121J)	120Ω,±5%,1/4W		
R193	CF,(ARD25T121J)	120Ω,±5%,1/4W		
R194	Single in-line array, (IHR-4-101JA)	100Ω x 4,1/8W		
R195	CF,(ERD10TJ101A)	100Ω,±5%,1/8W		
R196	CF,(ARD25T121J)	120Ω,±5%,1/4W		
R197	CF,(ARD25T121J)	120Ω,±5%,1/4W		
R198	CF,(ERD10TJ102A)	1kΩ,±5%,1/8W		
R199	Single in-line array, (IHR-4-101JA)	100Ω x 4,1/8W		
R200	CF,(ARD25T121J)	120Ω,±5%,1/4W		
R201	CF,(ARD25T121J)	120Ω,±5%,1/4W		
R202	CF,(ARD25T121J)	120Ω,±5%,1/4W		
R203	CF,(ERD10TJ471A)	470Ω,±5%,1/8W		
R204	Not assigned			
R205	Not assigned			
R206	Not assigned			
R207	Not assigned			
R208	Not assigned			
R209	Not assigned			
R210	CF,(ERD10TJ220A)	22Ω,±5%,1/8W		
R211	CF,(ERD10TJ470A)	47Ω,±5%,1/8W		
R212	CF,(ERD10TJ470A)	47Ω,±5%,1/8W		

( ): Manufacturer's part number
* : Selected at factory

Parts List : T-Z3 PATTERN GENERATOR II 21

CKT REF	DESCRIPTION	RATING		NOTE
R213	CF,(ERD10TJ470A)	47Ω,±5%,1/8W		
R214	CF,(ERD10TJ4R7A)	4.7Ω,±5%,1/8W		
R215	CF,(ERD10TJ4R7A)	4.7Ω,±5%,1/8W		
R216	CF,(ERD10TJ121A)	120Ω,±5%,1/8W		
R217	CF,(ERD10TJ121A)	120Ω,±5%,1/8W		
R218	CF,(ERD10TJ121A)	120Ω,±5%,1/8W		
R219	CF,(ERD10TJ121A)	120Ω,±5%,1/8W		
R220	CF,(ERD10TJ820A)	82Ω,±5%,1/8W		
R221	CF,(ERD10TJ820A)	82Ω,±5%,1/8W		
R222	CF,(ERD10TJ272A)	2.7kΩ,±5%,1/8W		
R223	CF,(ERD10TJ681A)	680Ω,±5%,1/8W		
R224	Var,MF,(RJ-6P 500Ω)	500Ω,1/2W		
R225	SIL type,(EXB-F4E151J)	150Ω x 4,1/8W		
R226	SIL type,(EXB-F4E181J)	180Ω x 4,1/8W		
R227	CF,(ERD10TJ820A)	82Ω,±5%,1/8W		
R228	CF,(ERD10TJ151A)	150Ω,±5%,1/8W		
R229	CF,(ERD10TJ181A)	180Ω,±5%,1/8W		
R230	CF,(ERD10TJ151A)	150Ω,±5%,1/8W		
R231	CF,(ERD10TJ181A)	180Ω,±5%,1/8W		
R232	CF,(ERD10TJ101A)	100Ω,±5%,1/8W		
R233	CF,(ARD25T121J)	120Ω,±5%,1/8W		
R234	CF,(ERD10TJ151A)	150Ω,±5%,1/8W		
R235	CF,(ERD10TJ181A)	180Ω,±5%,1/8W		
R236	CF,(ERD10TJ101A)	100Ω,±5%,1/8W		
R237	CF,(ARD25T121J)	120Ω,±5%,1/4W		
R238	CF,(ERD10TJ151A)	150Ω,±5%,1/4W		
R239	CF,(ERD10TJ181A)	180Ω,±5%,1/4W		
Z 1	Delay line, (1L4-F412.3NS)			
Z 2	Delay line, (1L4-F412.0NS)			
Z 3	Delay line, (1L4-F412.5NS)			
Z 4	Delay line, (1L4-F412.4NS)			
Z 5	Delay line, (1L4-F411.5NS)			
Z 6	Delay line, (1L4-F411.5NS)			
Z 7	Delay line, (1L4-F411.5NS)			

( ): Manufacturer's part number
* : Selected at factory

Parts List : T-Z4 OUTPUT 22

CKT REF	DESCRIPTION	RATING		NOTE
C 1	Elect,(CE04C1E330)	33μF,±20%,25V		
C 2	Elect,(CE04C1C330)	33μF,±20%,16V		
C 3	Cer,(RPE114C105M50V)	1μF,±20%,50V		
C 4	Cer,(CK924C1H104M)	0.1μF,±20%,50V		
C 5	Cer,(CK924F1H104Z)	0.1μF,+80/-20%,50V		
C 6	Cer,(CK924F1H104Z)	0.1μF,+80/-20%,50V		
C 7	Cer,(RPE114C105M50V)	1μF,±20%,50V		
C 8	Cer,(RPE114C105M50V)	1μF,±20%,50V		
C 9	Cer,(CK924F1H104Z)	0.1μF,+80/-20%,50V		
C10	Elect,(CE04C1A470)	47μF,±20%,10V		
C11	Elect,(CE04C1A470)	47μF,±20%,10V		
C12	Not assigned			
C13	Not assigned			
C14	Elect,(CE04C1C330)	33μF,±20%,16V		
C15	Cer,(CK924C1H103M)	0.01μF,±20%,50V		
C16	Cer,(RPE114C105M50V)	1μF,±20%,50V		
C17	Cer,(CK924C1H104M)	0.1μF,±20%,50V		
C18	Cer,(CK924C1H103M)	0.01μF,±20%,50V		
C19	Cer,(CK924F1H104Z)	0.1μF,+80/-20%,50V		
C20	Elect,(CE04C1C330)	33μF,±20%,16V		
C21	Cer,(CK924F1H104Z)	0.1μF,+80/-20%,50V		
C22	Elect,(CE04C1C330)	33μF,±20%,16V		
C23	Cer,(CK924F1H104Z)	0.1μF,+80/-20%,50V		
C24	Cer,(CK733F1H104Z)	0.1μF,+80/-20%,50V		
C25	Cer,(CK733F1H104Z)	0.1μF,+80/-20%,50V		
C26	Cer,(CK733F1H104Z)	0.1μF,+80/-20%,50V		
C27	Cer,(CK733F1H104Z)	0.1μF,+80/-20%,50V		
C28	Cer,(CK733F1H104Z)	0.1μF,+80/-20%,50V		
C29	Cer,(CK733F1H104Z)	0.1μF,+80/-20%,50V		
C30	Cer,(CK733F1H104Z)	0.1μF,+80/-20%,50V		
C31	Not assigned			
C32	Not assigned			
C33	Cer,(CK924F1H104Z)	0.1μF,+80/-20%,50V		
C34	Cer,(CK924F1H104Z)	0.1μF,+80/-20%,50V		
C35	Cer,(CK733F1H104Z)	0.1μF,+80/-20%,50V		
C36	Cer,(CK733F1H104Z)	0.1μF,+80/-20%,50V		
C37	Cer,(CK733F1H104Z)	0.1μF,+80/-20%,50V		
C38	Cer,(CK733F1H104Z)	0.1μF,+80/-20%,50V		
C39	Cer,(CK733F1H104Z)	0.1μF,+80/-20%,50V		
C40	Cer,(CK924F1H104Z)	0.1μF,+80/-20%,50V		
C41	Cer,(CK733F1H104Z)	0.1μF,+80/-20%,50V		
C42	Cer,(CK733F1H104Z)	0.1μF,+80/-20%,50V		
C43	Cer,(CK733F1H104Z)	0.1μF,+80/-20%,50V		
C44	Cer,(CK733F1H104Z)	0.1μF,+80/-20%,50V		
C45	Cer,(CK924F1H104Z)	0.1μF,+80/-20%,50V		

( ): Manufacturer's part number
* : Selected at factory

Parts List : T-Z4 OUTPUT 22

CKT REF	DESCRIPTION	RATING		NOTE
C46	Not assigned			
C47	Not assigned			
C48	Cer,(CC45CH1H101JY)	100pF,±5%,50V		
C49	Cer,(CK924C1H103M)	0.01μF,±20%,50V		
C50	Cer,(CK924C1H103M)	0.01μF,±20%,50V		
C51	Cer,(CK924C1H103M)	0.01μF,±20%,50V		
C52	Cer,(CK924F1H104Z)	0.1μF,+80/-20%,50V		
C53	Cer,(CK924C1H103M)	0.01μF,±20%,50V		
C54	Cer,(CK924C1H103M)	0.01μF,±20%,50V		
C55	Cer,(CK924C1H103M)	0.01μF,±20%,50V		
C56	Cer,(CC45CH1H101JY)	100pF,±5%,50V		
C57	Elect,(CE04C1E330)	33μF,±20%,25V		
C58	Cer,(CK924F1H104Z)	0.1μF,+80/-20%,50V		
C59	Cer,(CK924F1H104Z)	0.1μF,+80/-20%,50V		
C60	Cer,(CK924F1H104Z)	0.1μF,+80/-20%,50V		
C61	Cer,(CK924F1H104Z)	0.1μF,+80/-20%,50V		
C62	Cer,(CK924F1H104Z)	0.1μF,+80/-20%,50V		
C63	Cer,(CK733F1H104Z)	0.1μF,+80/-20%,50V		
C64	Cer,(CK733F1H104Z)	0.1μF,+80/-20%,50V		
C65	Cer,(CK737B1H224K)	0.22μF,±10%,50V		
C66	Not assigned			
C67	Not assigned			
C68	Cer,(CK737B1H224K)	0.22μF,±10%,50V		
C69	Cer,(CK733F1H104Z)	0.1μF,+80/-20%,50V		
C70	Cer,(CK733F1H104Z)	0.1μF,+80/-20%,50V		
C71	Cer,(CK733F1H104Z)	0.1μF,+80/-20%,50V		
C72	Cer,(CK733F1H104Z)	0.1μF,+80/-20%,50V		
C73	Cer,(CK924F1H104Z)	0.1μF,+80/-20%,50V		
C74	Cer,(CK924F1H104Z)	0.1μF,+80/-20%,50V		
C75	Cer,(CK924F1H104Z)	0.1μF,+80/-20%,50V		
C76	Cer,(CK924F1H104Z)	0.1μF,+80/-20%,50V		
C77	Cer,(CK924F1H104Z)	0.1μF,+80/-20%,50V		
C78	Cer,(CK924F1H104Z)	0.1μF,+80/-20%,50V		
C79	Cer,(CK924F1H104Z)	0.1μF,+80/-20%,50V		
C80	Cer,(CK924F1H104Z)	0.1μF,+80/-20%,50V		
C81	Cer,(CK924F1H104Z)	0.1μF,+80/-20%,50V		
C82	Cer,(CK924F1H104Z)	0.1μF,+80/-20%,50V		
C83	Not assigned			
C84	Not assigned			
C85	Cer,(CK924F1H104Z)	0.1μF,+80/-20%,50V		
C86	Cer,(CK924F1H104Z)	0.1μF,+80/-20%,50V		
C87	Elect,(CE04C1C330)	33μF,±20%,16V		
C88	Cer,(CK924F1H104Z)	0.1μF,+80/-20%,50V		
C89	Elect,(CE04C1A470)	47μF,±20%,10V		
C90	Cer,(CK924F1H104Z)	0.1μF,+80/-20%,50V		

( ) : Manufacturer's part number
* : Selected at factory

Parts List : T-Z4 OUTPUT 22

CKT REF	DESCRIPTION	RATING		NOTE
C91	Elect,(CE04C1C330)	33μF,±20%,16V		
C92	Cer,(CK924F1H104Z)	0.1μF,+80/-20%,50V		
C93	Elect,(CE04C1A470)	47μF,±20%,10V		
C94	Cer,(CK924F1H104Z)	0.1μF,+80/-20%,50V		
C95	Elect,(CE04C1C470)	47μF,±20%,16V		
C96	Cer,(CK924F1H104Z)	0.1μF,+80/-20%,50V		
C97	Elect,(CE04W1E220)	22μF,±20%,25V		
C98	Cer,(CK924F1H104Z)	0.1μF,+80/-20%,50V		
C99	Cer,(CK924F1H104Z)	0.1μF,+80/-20%,50V		
C100	Cer,(CK924F1H104Z)	0.1μF,+80/-20%,50V		
C101	Cer,(CK924F1H104Z)	0.1μF,+80/-20%,50V		
C102	Cer,(CK733F1H104Z)	0.1μF,+80/-20%,50V		
C103	Cer,(CK733F1H104Z)	0.1μF,+80/-20%,50V		
C104	Cer,(CK924F1H104Z)	0.1μF,+80/-20%,50V		
C105	Cer,(CK924F1H104Z)	0.1μF,+80/-20%,50V		
C106	Cer,(CK924F1H104Z)	0.1μF,+80/-20%,50V		
C107	Cer,(CK924F1H104Z)	0.1μF,+80/-20%,50V		
C108	Cer,(CK924F1H104Z)	0.1μF,+80/-20%,50V		
C109	Cer,(CK924F1H104Z)	0.1μF,+80/-20%,50V		
C110	Cer,(CK924F1H104Z)	0.1μF,+80/-20%,50V		
C111	Cer,(CK924F1H104Z)	0.1μF,+80/-20%,50V		
C112	Cer,(CK732B1H103K)	0.01μF,±10%,50V		
C113	Cer,(CK924F1H104Z)	0.1μF,+80/-20%,50V		
C114	Not assigned			
C115	Cer,(CK924F1H104Z)	0.1μF,+80/-20%,50V		
C116	Cer,(CK924F1H104Z)	0.1μF,+80/-20%,50V		
C117	Elect,(CE04C1A470)	47μ,±20%,10V		
C118	Cer,(CK924F1H104Z)	0.1μF,+80/-20%,50V		
C119	Cer,(CK924F1H104Z)	0.1μF,+80/-20%,50V		
C120	Elect,(CE04C1A470)	47μF,±20%,10V		
C121 to C135	Cer,(CK924F1H104Z)	0.1μF,+80/-20%,50V		
C136	Cer,(CK734B1H104K)	0.1μF,±10%,50V		
C137	Cer,(CK924F1H104Z)	0.1μF,+80/-20%,50V		
C138	Cer,(CK924F1H104Z)	0.1μF,+80/-20%,50V		
C139	Cer,(CK924F1H104Z)	0.1μF,+80/-20%,50V		
C140	Cer,(CK734B1H104K)	0.1μF,±10%,50V		
C141	Cer,(CK924F1H104Z)	0.1μF,+80/-20%,50V		
C142	Cer,(CK924F1H104Z)	0.1μF,+80/-20%,50V		
C143	Cer,(CK924F1H104Z)	0.1μF,+80/-20%,50V		
C144	Cer,(CK734B1H104K)	0.1μF,±10%,50V		
C145	Cer,(CK924F1H104Z)	0.1μF,+80/-20%,50V		
C146	Cer,(CK734B1H104K)	0.1μF,±10%,50V		
C147 to C157	Cer,(CK924F1H104Z)	0.1μF,+80/-20%,50V		

( ) : Manufacturer's part number
* : Selected at factory

Parts List : T-Z4 OUTPUT 22

CKT REF	DESCRIPTION	RATING		NOTE
C158	Not assigned			
C159	Cer,(CK924F1H104Z)	0.1μF,+80/-20%,50V		
C160	Cer,(CK924F1H104Z)	0.1μF,+80/-20%,50V		
C161	Cer,(CK924F1H104Z)	0.1μF,+80/-20%,50V		
C162	Cer,(CK924F1H104Z)	0.1μF,+80/-20%,50V		
C163	Not assigned			
C164	Cer,(CK924F1H104Z)	0.1μF,+80/-20%,50V		
C165	Cer,(CK924F1H104Z)	0.1μF,+80/-20%,50V		
C166	Cer,(CK924F1H104Z)	0.1μF,+80/-20%,50V		
C167	Cer,(CK924F1H104Z)	0.1μF,+80/-20%,50V		
C168	Cer,(CK924F1H104Z)	0.1μF,+80/-20%,50V		
C169	Cer,(CK924F1H104Z)	0.1μF,+80/-20%,50V		
C170	Cer,(RPE114C105M50V)	1μF,±20%,50V		
C171	Cer,(CK924F1H104Z)	0.1μF,+80/-20%,50V		
C172	Cer,(CK924F1H104Z)	0.1μF,+80/-20%,50V		
C173	Cer,(RPE114C105M50V)	1μF,±20%,50V		
C174	Cer,(CK924F1H104Z)	0.1μF,+80/-20%,50V		
C175	Cer,(CK924F1H104Z)	0.1μF,+80/-20%,50V		
C176	Cer,(CK733F1H104Z)	0.1μF,+80/-20%,50V		
C177	Cer,(CK733F1H104Z)	0.1μF,+80/-20%,50V		
C178	Cer,(CK733F1H104Z)	0.1μF,+80/-20%,50V		
C179	Cer,(CK924F1H104Z)	0.1μF,+80/-20%,50V		
C180	Not assigned			
C181	Cer,(CK924F1H104Z)	0.1μF,+80/-20%,50V		
C182	Not assigned			
C183	Cer,(CK924F1H104Z)	0.1μF,+80/-20%,50V		
C184	Cer,(CK924F1H104Z)	0.1μF,+80/-20%,50V		
C185	Cer,(CK924F1H104Z)	0.1μF,+80/-20%,50V		
C186	Cer,(CK924F1H104Z)	0.1μF,+80/-20%,50V		
C187	Cer,(CK733F1H104Z)	0.1μF,+80/-20%,50V		
C188	Cer,(CK733F1H104Z)	0.1μF,+80/-20%,50V		
C189	Cer,(CK924F1H104Z)	0.1μF,+80/-20%,50V		
C190	Cer,(CK924F1H104Z)	0.1μF,+80/-20%,50V		
C191	Cer,(CK733F1H104Z)	0.1μF,+80/-20%,50V		
C192	Cer,(CK733F1H104Z)	0.1μF,+80/-20%,50V		
C193	Cer,(CK733F1H104Z)	0.1μF,+80/-20%,50V		
C194	Cer,(CK924F1H104Z)	0.1μF,+80/-20%,50V		
C195	Cer,(CK924F1H104Z)	0.1μF,+80/-20%,50V		
C196	Cer,(CK924F1H104Z)	0.1μF,+80/-20%,50V		
C197	Cer,(CK924F1H104Z)	0.1μF,+80/-20%,50V		
C198	Cer,(CK924F1H104Z)	0.1μF,+80/-20%,50V		
C199	Cer,(CK924F1H104Z)	0.1μF,+80/-20%,50V		
C200	Cer,(CK924F1H104Z)	0.1μF,+80/-20%,50V		

( ) : Manufacturer's part number
* : Selected at factory

Parts List : T-Z4 OUTPUT 22

CKT REF	DESCRIPTION	RATING		NOTE
J 1	Pattern			
J 2	Receptacle, (27DP-R-PC-1)			
J 3	Receptacle, (27DP-R-PC-1)			
J 4	Receptacel,(HRM301B)			
J 5	Not assigned			
J 6	Receptacle, (HRM-100-32S)			
J 7	Receptacle, (HRM-100-32S)			
J 8	Receptacle, (HRM-100-32S)			
J 9	Receptacle, (HRM-100-32S)			
K 1	Relay,(SZ-2103)			
K 2	Relay,(SZ-2103)			
K 3	Relay,(SZ-2103)			
K 4	Relay,(SZ-2103)			
K 5	Relay,(SZ-2103)			
K 6	Relay,(SZ-2103)			
K 7	Relay,(SZ-2103)			
Q 1	Tr,(2SC1826 Ⓢ)			
Q 2	Di,(1S953)			
Q 3	Di,(1S953)			
Q 4	IC,(μPC451C)			
Q 5	IC,(μPC451C)			
Q 6	IC,(μPC1251C)			
Q 7	Tr,(2SA1151)			
Q 8	Tr,(2SA1154)			
Q 9	Tr,(2SA1151)			
Q10	Not assigned			
Q11	Tr,(2SD571)			
Q12	Di,breakdown,(RD2.0E)	1.88 to 2.24V,400mW		
Q13	Di,breakdown,(RD3.9E)	3.7 to 4.16V,400mW		
Q14	Tr,(2SD571)			
Q15	IC,(μPC451C)			
Q16	Di,(1S953)			
Q17	Di,(1S953)			
Q18	IC,(μPC451C)			
Q19	Di,breakdown,(RD3.9E)	3.7 to 4.16V,400mW		
Q20	Di,breakdown,(RD2.0E)	1.88 to 2.24V,400mW		

( ) : Manufacturer's part number
* : Selected at factory

Parts List : T-Z4 OUTPUT 22

CKT REF	DESCRIPTION	RATING		NOTE
Q21	Tr,(2SD571)			
Q22	Tr,(2SD571)			
Q23	Di,breakdwon,(1SZ52)	5.9 to .6.5V,250mW		
Q24	Not assigned			
Q25	Not assigned			
Q26	FET,(MGF1032)			
Q27	FET,(MGF1032)			
Q28	FET,(MGF1032)			
Q29	FET,(MGF1032)			
Q30	FET,(MGF1032)			
Q31	GaAs Di,(ND587T-3P)			
Q32	FET,(MGF1032)			
Q33	Not assigned			
Q34	Not assigned			
Q35	Not assigned			
Q36	Di,(1S953)			
Q37	Di,(1S953)			
Q38	Tr,(2SA1151)			
Q39	Tr,(2SC1826Ⓢ)			
Q40	Not assigned			
Q41	Not assigned			
Q42	GaAs Di,(ND587T-3P)			
Q43	FET,(MGF1302)			
Q44	FET,(MGF1302)			
Q45	Tr,(2SD571)			
Q46	Di,(1S953)			
Q47	Di,(1S953)			
Q48	FET,(2SK569)			
Q49	FET,(2SK569)			
Q50	Not assigned			
Q51	Not assigned			
Q52	Tr,(2SC3584)			
Q53	Tr,(2SC3584)			
Q54	GaAs Di,(ND587T-3P)			
Q55	FET,(MGF1302)			
Q56	FET,(MGF1302)			
Q57	FET,(MGF1302)			
Q58	FET,(MGF1302)			
Q59	FET,(MGF1302)			
Q60	FET,(MGF1302)			
Q61	FET,(2SK569)			
Q62	FET,(2SK569)			
Q63	GaAs Di,(ND587T-3R)			
Q64	GaAs Di,(ND587T-3R)			
Q65	Tr,(2SC3584)			

( ): Manufacturer's part number
* : Selected at factory

44W83025 6/21

Parts List : T-Z4 OUTPUT 22

CKT REF	DESCRIPTION	RATING		NOTE
Q66	Tr,(2SC3584)			
Q67	IC,(μPA101G)			
Q68	Di,(1S953)			
Q69	Di,(1S953)			
Q70	Tr,(2SC3584)			
Q71	Tr,(2SC3584)			
Q72	IC,(μPA102G)			
Q73	Di,(1S953)			
Q74	Not assigned			
Q75	Not assigned			
Q76	IC,(74LS244)			
Q77	IC,(μPC451C)			
Q78	IC,(HA17408P)			
Q79	IC,(HA17408P)			
Q80	IC,(μPC451C)			
Q81	IC,(HA17408P)			
Q82	IC,(HA17408P)			
Q83	IC,(TD61083AP)			
Q84	IC,(74LS123)			
Q85	IC,(HD75107AP)			
Q86	Not assigned			
Q87	Not assigned			
Q88	Not assigned			
Q89	FET,(2SK569)			
Q90	Tr,(2SC3584)			
Q91	Tr,(2SC3584)			
Q92	FET,(2SK569)			
Q93	Not assigned			
Q94	Tr,(2SC3584)			
Q95	Not assigned			
Q96	IC,(μPA101G)			
Q97	Tr,(2SC3584)			
Q98	Di,(1S953)			
Q99	Di,(1S953)			
Q100	GaAs Di,(ND587T-3P)			
Q101	FET,(MGF1302)			
Q102	FET,(MGF1302)			
Q103	GaAs Di,(ND587T-3R)			
Q104	GaAs Di,(ND587T-3R)			
Q105	Tr,(2SC3604)			
Q106	Tr,(2SC3604)			
Q107	GaAs Di,(ND587T-3R)			
Q108	GaAs Di,(ND587T-3R)			
Q109	Tr,(2SC3584)			
Q110	Tr,(2SC3584)			

( ): Manufacturer's part number
* : Selected at factory

44W83025 7/21

Parts List : T-Z4 OUTPUT 22

CKT REF	DESCRIPTION	RATING		NOTE
Q111	Di,(1S953)			
Q112	IC,(μPA103G)			
Q113	Di,(1S953)			
Q114	Tr,(2SC3584)			
Q115	Not assigned			
Q116	IC,(74LS138)			
Q117	IC,(74LS244)			
Q118	IC,(74LS273)			
Q119	IC,(74LS273)			
Q120	IC,(74LS273)			
Q121	IC,(74LS273)			
Q122	IC,(74LS273)			
Q123	IC,(μPA104G)			
Q124	IC,(μPA104G)			
Q125	Tr,(2SC3584)			
Q126	IC,(μPA104G)			
Q127	FET,(2SK569)			
Q128	FET,(2SK569)			
Q129	IC,(μPA104G)			
Q130	Tr,(2SC3584)			
Q131	Tr,(2SC3584)			
Q132	Di,(1S953)			
Q133	Di,(1S953)			
Q134	Di,(1S953)			
Q135	Tr,(2SC3584)			
Q136	Tr,(2SC3584)			
Q137	Not assigned			
Q138	IC,(μPA104G)			
Q139	Tr,(2SC3584)			
Q140	Di,(1S953)			
Q141	Tr,(2SD571)			
Q142	Di,(1S953)			
Q143	IC,(μPA102G)			
Q144	IC,(μPB636B)			
Q145	Not assigned			
Q146	Di,(1S953)			
Q147	IC,(μPA102G)			
Q148	IC,(μPB636B)			
Q149	Tr,(2SC3584)			
Q150	Tr,(2SC3584)			
Q151	Tr,(2SC3584)			
Q152	Not assigned			
Q153	Di,(1S953)			
Q154	Tr,(2SC3584)			
Q155	Tr,(2SC3584)			

( ): Manufacturer's part number
* : Selected at factory

44W83025 8/21

Parts List : T-Z4 OUTPUT 22

CKT REF	DESCRIPTION	RATING		NOTE
Q156	Di,(1S953)			
Q157	IC,(μPA104G)			
Q158	Di,(1S953)			
Q159	IC,(μPA104G)			
Q160	Tr,(2SC3584)			
Q161	IC,(μPC1251C)			
Q162	Tr,(2SC3584)			
Q163	Tr,(2SC3604)			
Q164	Tr,(2SC3604)			
Q165	Di,(1S953)			
Q166	Di,(1S953)			
Q167	Di,(1S953)			
Q168	Di,(1S953)			
Q169	Di,(1S953)			
Q170	Di,(1S953)			
Q171	Tr,(2SC3584)			
Q172	Tr,(2SC3584)			
Q173	FET,(2SK569)			
Q174	FET,(2SK569)			
Q175	Di,(1S953)			
Q176	Di,(1S953)			
Q177	Tr,(2SC2718)			
Q178	Tr,(2SC2718)			
R 1	MF,(RN14K2E1002D)	10.0kΩ,±0.5%,1/4W		
R 2	CF,(ERD10TJ2R2A)	2.2Ω,±5%,1/8 W		
R 3	CF,(ERD10TJ2R2A)	2.2Ω,±5%,1/8W		
R 4	Not assigned			
R 5	CF,(ERD10TJ100A)	10Ω,±5%,1/8W		
R 6	CF,(ERD10TJ152A)	1.5kΩ,±5%,1/8W		
R 7	CF,(ERD10TJ152A)	1.5kΩ,±5%,1/8W		
R 8	CF,(ERD10TJ153A)	15kΩ,±5%,1/8W		
R 9	CF,(ERD10TJ153A)	15kΩ,±5%,1/8W		
R10	MF,(RN14K2E1002D)	10.0kΩ,±0.5%,1/4W		
R11	CF,(ERD10TJ153A)	15kΩ,±5%,1/8W		
R12	MF,(RN14K2E1002D)	10.0kΩ,±0.5%,1/4W		
R13	MF,(RN14K2E1002D)	10.0kΩ,±0.5%,1/4W		
R14	MF,(RN14K2E1002D)	10.0kΩ,±0.5%,1/4W		
R15	MF,(RN14K2E1002D)	10.0kΩ,±0.5%,1/4W		
R16	Var,MF,(RJ-6P 5kΩ)	5kΩ,1/2W		
R17	MF,(RN14K2E1002D)	10.0kΩ,±0.5%,1/4W		
R18	Not assigned			
R19	CF,(ARD25T102J)	1kΩ,±5%,1/4W		
R20	CF,(ERD10TJ472A)	4.7kΩ,±5%,1/8W		

( ): Manufacturer's part number
* : Selected at factory

44W83025 9/21

Parts List : T-24 OUTPUT 22

CKT REF	DESCRIPTION	RATING		NOTE
R21	CF,(ERD10TJ332A)	3.3kΩ,±5%,1/8W		
R22	Var,MF,(RJ-6P 2kΩ)	2kΩ,1/2W		
R23	Var,MF,(RJ-6P 500Ω)	500Ω,1/2W		
R24	CF,(ERD10TJ470A)	47Ω,±5%,1/8W		
R25	CF,(ERD10TJ470A)	47Ω,±5%,1/8W		
R26	Not assigned			
R27	Not assigned			
R28	CF,(ERD10TJ * A)	100Ω to 10kΩ,±5%, 1/8W		*
R29	CF,(ERD10TJ680A)	68Ω,±5%,1/8W		
R30	Var,MF,(RJ-6P 1kΩ)	1kΩ,1/2W		
R31	CF,(ERD10TJ471A)	470Ω,±5%,1/8W		
R32	MF,(RN14K2E1002D)	10.0kΩ,±0.5%,1/4W		
R33	MF,(RN14K2E1002D)	10.0kΩ,±0.5%,1/4W		
R34	MF,(RN14K2E1002D)	10.0kΩ,±0.5%,1/4W		
R35	MF,(RN14K2E1002D)	10.0kΩ,±0.5%,1/4W		
R36	MF,(RN14K2E1002D)	10.0kΩ,±0.5%,1/4W		
R37	MF,(RN14K2E4991D)	4.99kΩ,±0.5%,1/4W		
R38	MF,(RN14K2E1002D)	10.0kΩ,±0.5%,1/4W		
R39	MF,(RN14K2E1002D)	10.0kΩ,±0.5%,1/4W		
R40	MF,(RN14K2E1002D)	10.0kΩ,±0.5%,1/4W		
R41	MF,(RN14K2E1002D)	10.0kΩ,±0.5%,1/4W		
R42	CF,(ERD10TJ153A)	15kΩ,±5%,1/8W		
R43	CF,(ERD10TJ153A)	15kΩ,±5%,1/8W		
R44	CF,(ERD10TJ153A)	15kΩ,±5%,1/8W		
R45	MF,(RN14K2E1002D)	10.0kΩ,±0.5%,1/4W		
R46	MF,(RN14K2E1002D)	10.0kΩ,±0.5%,1/4W		
R47	MF,(RN14K2E1002D)	10.0kΩ,±0.5%,1/4W		
R48	MF,(RN14K2E1002D)	10.0kΩ,±0.5%,1/4W		
R49	MF,(RN14K2E1002D)	[illegible],±0.5%,1/4W		
R50	CF,(ERD10TJ471A)	470Ω,±5%,1/8W		
R51	MF,(RN14K2E1002D)	[illegible],±0.5%,1/4W		
R52	MF,(RN14K2E4991D)	[illegible],±0.5%,1/4W		
R53	MF,(RN14K2E1002D)	[illegible],±0.5%,1/4W		
R54	MF,(RN14K2E1002D)	[illegible],±0.5%,1/4W		
R55	MF,(RN14K2E1002D)	10.0kΩ,±0.5%,1/4W		
R56	MF,(RN14K2E1002D)	10.0kΩ,±0.5%,1/4W		
R57	MF,(RN14K2E1002D)	10.0kΩ,±0.5%,1/4W		
R58	CF,(ERD10TJ680A)	68Ω,±5%,1/8W		
R59	CF,(ERD10TJ * A)	100Ω to 1kΩ,±5%,1/8W		Q'ty 1 to 3, *
R60	MF,(RN14K2E16R9D)	16.9Ω,±0.5%,1/4W		
R61	Var,MF,(RJ-6P 100Ω)	100Ω,1/2W		
R62	CF,(ERD10TJ220A)	22Ω,±5%,1/8W		

( ): Manufacturer's part number
* : Selected at factory

Parts List : T-24 OUTPUT 22

CKT REF	DESCRIPTION	RATING		NOTE
R63	MF,(RN14K2E2611D)	2.61kΩ,±0.5%,1/4W		
R64	MF,(RN14K2E2001D)	2.00kΩ,±0.5%,1/4W		
R65	CF,(ERD10TJ102A)	1kΩ,±5%,1/8W		
R66	Var,MF,(RJ-6P 1kΩ)	1kΩ,1/2W		
R67	Not assigned			
R68	Terminator,(H-2)	50Ω,10W		
R69	CF,(ERD10TJ * A)	10 to 100Ω,±5%,1/8W		*
R70	CF,(ERD10TJ472A)	4.7kΩ,±5%,1/8W		
R71	CF,(ARD25T330J)	33Ω,±5%,1/4W		
R72	CF,(ERD10TJ * A)	10 to 100Ω,±5%,1/8W		*
R73	CF,(ARD25T330J)	33Ω,±5%,1/4W		
R74	CF,(ARD25T330J)	33Ω,±5%,1/4W		
R75	CF,(ARD25T330J)	33Ω,±5%,1/4W		
R76	CF,(ERD10TJ472A)	4.7kΩ,±5%,1/8W		
R77	CF,(ERD10TJ * A)	10 to 100Ω,±5%,1/8W		*
R78	CF,(ERD10TJ * A)	10 to 100Ω,±5%,1/8W		*
R79	Terminator,(H-2)	50Ω,10W		
R80	Terminator,(H-2)	50Ω,10W		
R81	MF,(NRTF1/2C 470ΩJ)	470Ω,±5%,1/2W		
R82	Not assigned			
R83	Not assigned			
R84	MF,(NRTF1/2C 470ΩJ)	470Ω,±5%,1/2W		
R85	Not assigned			
R86	Not assigned			
R87	MF,(NRTF1/2C 470ΩJ)	470Ω,±5%,1/2W		
R88	Not assigned			
R89	CF,(ERD10TJ * A)	1kΩ to 1MΩ,±5%,1/8W		Q'ty 0 to 3, *
R90	CF,(ERD10TJ471A)	470Ω,±5%,1/8W		
R91	Var,MF,(RJ-6P 100Ω)	100Ω,1/2W		
R92	Not assigned			
R93	MF,(RN14K2E1002D)	10.0kΩ,±0.5%,1/4W		
R94	MF,(RN14K2E16R9D)	16.9Ω,±0.5%,1/4W		
R95	Var,MF,(RJ-6P 100Ω)	100Ω,1/2W		
R96	CF,(ERD10TJ220A)	22Ω,±5%,1/8W		
R97	MF,(RN14K2E1002D)	10.0kΩ,±0.5%,1/4W		
R98	Not assigned			
R99	Var,MF,(RJ-6P 500Ω)	500Ω,1/2W		
R100	Var,MF,(RJ-6P 1kΩ)	1kΩ,1/2W		
R101	MF,(RN14K2E1003D)	100kΩ,±0.5%,1/4W		
R102	MF,(RN14K2E1003D)	100kΩ,±0.5%,1/4W		
R103	Not assigned			
R104	MF,(RN14K2E1003D)	100kΩ,±0.5%,1/4W		
R105	MF,(RN14K2E1003D)	100kΩ,±0.5%,1/4W		

( ): Manufacturer's part number
* : Selected at factory

Parts List : T-24 OUTPUT 22

CKT REF	DESCRIPTION	RATING		NOTE
R106	Not assigned			
R107	MF,(RN14K2E1002D)	10.0kΩ,±0.5%,1/4W		
R108	CF,(ARD25T102J)	1kΩ,±5%,1/4W		
R109	MF,(RN14K2E1002D)	10.0kΩ,±0.5%,1/4W		
R110	MF,(RN14K2E9311D)	9.31kΩ,±0.5%,1/4W		
R111	MF,(RN14K2E1003D)	100kΩ,±0.5%,1/4W		
R112	MF,(RN14K2E1003D)	100kΩ,±0.5%,1/4W		
R113	Not assigned			
R114	MF,(RN14K2E1003D)	100kΩ,±0.5%,1/4W		
R115	MF,(RN14K2E1003D)	100kΩ,±0.5%,1/4W		
R116	Not assigned			
R117	MF,(RN14K2E1002D)	10.0kΩ,±0.5%,1/4W		
R118	CF,(ARD25T102J)	1kΩ,±5%,1/4W		
R119	Not assigned			
R120	Var,MF,(RJ-6P 500Ω)	500Ω,1/2W		
R121	Var,MF,(RJ-6P 1kΩ)	1kΩ,1/2W		
R122	MF,(RN14K2E1002D)	10.0kΩ,±0.5%,1/4W		
R123	MF,(RN14K2E1002D)	10.0kΩ,±0.5%,1/4W		
R124	MF,(RN14K2E1002D)	10.0kΩ,±0.5%,1/4W		
R125	MF,(RN14K2E9311D)	9.31kΩ,±0.5%,1/4W		
R126	CF,(ERD10TJ152A)	1.5kΩ,±5%,1/8W		
R127	CF,(ERD10TJ152A)	1.5kΩ,±5%,1/8W		
R128	MF,(RN14K2E1002D)	10.0kΩ,±0.5%,1/4W		
R129	CF,(ERD10TJ2R2A)	2.2Ω,±5%,1/8W		
R130	CF,(ERD10TJ2R2A)	2.2Ω,±5%,1/8W		
R131	CF,(ERD10TJ100A)	10Ω,±5%,1/8W		
R132	Not assigned			
R133	Not assigned			
R134	Not assigned			
R135	CF,(ERD10TJ510A)	51Ω,±5%,1/8W		
R136	CF,(ERD10TJ101A)	100Ω,±5%,1/8W		
R137	CF,(ERD10TJ182A)	1.8kΩ,±5%,1/8W		
R138	Var,MF,(RJ-6P 500Ω)	500Ω,1/2W		
R139	CF,(ERD10TJ391A)	390Ω,±5%,1/8W		
R140	CF,(ERD10TJ470A)	47Ω,±5%,1/8W		
R141	CF,(ERD10TJ510A)	51Ω,±5%,1/8W		
R142	MF,(NRTF1/2C 470ΩJ)	470Ω,±5%,1/2W		
R143	CF,(ERD10TJ101A)	100Ω,±5%,1/8W		
R144	CF,(ERD10TJ510A)	51Ω,±5%,1/8W		
R145	CF,(ARD25T820J)	82Ω,±5%,1/4W		
R146	Not assigned			
R147	CF,(ERD10TJ510A)	51Ω,±5%,1/8W		
R148	CF,(ERD10TJ101A)	100Ω,±5%,1/8W		
R149	CF,(ERD10TJ * A)	10 to 100Ω,±5%,1/8W		*
R150	CF,(ERD10TJ * A)	10 to 100Ω,±5%,1/8W		*

( ): Manufacturer's part number
* : Selected at factory

Parts List : T-24 OUTPUT 22

CKT REF	DESCRIPTION	RATING		NOTE
R151	MF,(NRTF1/2C 470ΩJ)	470Ω,±5%,1/2W		
R152	CF,(ERD10TJ331A)	330Ω,±5%,1/8W		
R153	Not assigned			
R154	Not assigned			
R155	CF,(ERD10TJ331A)	330Ω,±5%,1/8W		
R156	Terminator,(H-2)	50Ω,10W		
R157	Terminator,(H-2)	50Ω,10W		
R158	Terminator,(H-2)	50Ω,10W		
R159	CF,(ERD10TJ * A)	10 to 100Ω,±5%,1/8W		*
R160	CF,(ERD10TJ * A)	10 to 100Ω,±5%,1/8W		*
R161	CF,(ERD10TJ153A)	15kΩ,±5%,1/8W		
R162	CF,(ARD25T330J)	33Ω,±5%,1/4W		
R163	CF,(ARD25T330J)	33Ω,±5%,1/4W		
R164	CF,(ARD25T330J)	33Ω,±5%,1/4W		
R165	CF,(ERD10TJ * A)	10 to 100Ω,±5%,1/8W		*
R166	CF,(ERD10TJ * A)	10 to 100Ω,±5%,1/8W		*
R167	CF,(ERD10TJ153A)	15kΩ,±5%,1/8W		
R168	CF,(ARD25T330J)	33Ω,±5%,1/4W		
R169	MF,(NRTF1/2C 470ΩJ)	470Ω,±5%,1/2W		
R170	Not assigned			
R171	CF,(ERD10TJ * A)	1k to 10kΩ,±5%,1/8W		Q'ty 1 to 3, *
R172	CF,(ERD10TJ123A)	12kΩ,±5%,1/8W		
R173	CF,(ERD10TJ101A)	100Ω,±5%,1/8W		
R174	CF,(ERD10TJ510A)	51Ω,±5%,1/8W		
R175	CF,(ARD25T820J)	82Ω,±5%,1/4W		
R176	CF,(ERD10TJ * A)	1k to 10kΩ,±5%,1/8W		Q'ty 1 to 3, *
R177	CF,(ERD10TJ510A)	51Ω,±5%,1/8W		
R178	CF,(ERD10TJ101A)	100Ω,±5%,1/8W		
R179	CF,(ERD10TJ123A)	12kΩ,±5%,1/8W		
R180	MF,(NRTF1/2C 470ΩJ)	470Ω,±5%,1/2W		
R181	CF,(ERD10TJ * A)	10 to 150Ω,±5%,1/8W		*
R182	CF,(ERD10TJ * A)	10 to 150Ω,±5%,1/8W		*
R183	MF,(NRTF1/2C 470ΩJ)	470Ω,±5%,1/2W		
R184	CF,(ERD10TJ331A)	330Ω,±5%,1/8W		
R185	CF,(ERD10TJ101A)	100Ω,±5%,1/8W		
R186	CF,(ERD10TJ510A)	51Ω,±5%,1/8W		
R187	CF,(ERD10TJ510A)	51Ω,±5%,1/8W		
R188	CF,(ERD10TJ101A)	100Ω,±5%,1/8W		
R189	CF,(ERD10TJ331A)	330Ω,±5%,1/8W		
R190	CF,(ERD10TJ151A)	150Ω,±5%,1/8W		
R191	CF,(ERD10TJ560A)	56Ω,±5%,1/8W		
R192	CF,(ERD10TJ560A)	56Ω,±5%,1/8W		

( ): Manufacturer's part number
* : Selected at factory

Parts List : T-24 OUTPUT 22

CKT REF	DESCRIPTION	RATING		NOTE
R193	CF,(ERD10TJ151A)	150Ω,±5%,1/8W		
R194	CF,(ERD10TJ221A)	220Ω,±5%,1/8W		
R195	CF,(ERD10TJ * A)	10 to 100Ω,±5%,1/8W		*
R196	CF,(ERD10TJ * A)	10 to 100Ω,±5%,1/8W		*
R197	CF,(ERD10TJ221A)	220Ω,±5%,1/8W		
R198	CF,(ERD10TJ101A)	100Ω,±5%,1/8W		
R199	CF,(ERD10TJ101A)	100Ω,±5%,1/8W		
R200	CF,(ERD10TJ680A)	68Ω,±5%,1/8W		
R201	CF,(ERD10TJ510A)	51Ω,±5%,1/8W		
R202	CF,(ERD10TJ510A)	51Ω,±5%,1/8W		
R203	CF,(ERD10TJ102A)	1kΩ,±5%,1/8W		
R204	CF,(ERD10TJ102A)	1kΩ,±5%,1/8W		
R205	CF,(ERD10TJ151A)	150Ω,±5%,1/8W		
R206	Not assigned			
R207	Not assigned			
R208	MF,(RN14K2E2002D)	20.0kΩ,±0.5%,1/4W		
R209	MF,(RN14K2E1102D)	11.0kΩ,±0.5%,1/4W		
R210	MF,(RN14K2E1102D)	11.0kΩ,±0.5%,1/4W		
R211	MF,(RN14K2E2002D)	20.0kΩ,±0.5%,1/4W		
R212	MF,(RN14K2E5491D)	5.49kΩ,±0.5%,1/4W		
R213	MF,(RN14K2E5491D)	5.49kΩ,±0.5%,1/4W		
R214	MF,(RN14K2E2002D)	20.0kΩ,±0.5%,1/4W		
R215	MF,(RN14K2E1102D)	11.0kΩ,±0.5%,1/4W		
R216	MF,(RN14K2E1102D)	11.0kΩ,±0.5%,1/4W		
R217	MF,(RN14K2E2002D)	20.0kΩ,±0.5%,1/4W		
R218	MF,(RN14K2E5491D)	5.49kΩ,±0.5%,1/4W		
R219	MF,(RN14K2E5491D)	5.49kΩ,±0.5%,1/4W		
R220	CF,(ERD10TJ473A)	47kΩ,±5%,1/8W		
R221	CF,(ERD10TJ182A)	1.8kΩ,±5%,1/8W		
R222	CF,(ERD10TJ561A)	560Ω,±5%,1/8W		
R223	Not assigned			
R224	Not assigned			
R225	CF,(ERD10TJ * A)	10 to 100Ω,±5%,1/8W		*
R226	CF,(ARD25T511J)	510Ω,±5%,1/4W		
R227	Not assigned			
R228	CF,(ERD10TJ101A)	100Ω,±5%,1/8W		
R229	CF,(ERD10TJ510A)	51Ω,±5%,1/8W		
R230	MF,(NRTF1/2C 470ΩJ)	470Ω,±5%,1/2W		
R231	CF,(ERD10TJ * A)	10 to 100Ω,±5%,1/8W		*
R232	CF,(ERD10TJ331A)	330Ω,±5%,1/8W		
R233	CF,(ARD25T561J)	560Ω,±5%,1/4W		
R234	CF,(ARD25T561J)	560Ω,±5%,1/4W		
R235	CF,(ERD10TJ * A)	10 to 100Ω,±5%,1/8W		*
R236	CF,(ARD25T511J)	510Ω,±5%,1/4W		
R237	Not assigned			

( ): Manufacturer's part number
* : Selected at factory

Parts List : T-24 OUTPUT 22

CKT REF	DESCRIPTION	RATING		NOTE
R238	CF,(ERD10TJ101A)	100Ω,±5%,1/8W		
R239	CF,(ERD10TJ510A)	51Ω,±5%,1/8W		
R240	CF,(ERD10TJ * A)	10 to 100Ω,±5%,1/8W		*
R241	MF,(NRTF1/2C 470ΩJ)	470Ω,±5%,1/2W		
R242	CF,(ERD10TJ331A)	330Ω,±5%,1/8W		
R243	Not assigned			
R244	CF,(ERD10TJ330A)	33Ω,±5%,1/8W		
R245	CF,(ERD10TJ330A)	33Ω,±5%,1/8W		
R246	Not assigned			
R247	CF,(ERD10TJ102A)	1kΩ,±5%,1/8W		
R248	CF,(ERD10TJ331A)	330Ω,±5%,1/8W		
R249	CF,(ERD10TJ102A)	1kΩ,±5%,1/8W		
R250	CF,(ERD10TJ821A)	820Ω,±5%,1/8W		
R251	CF,(ERD10TJ151A)	150Ω,±5%,1/8W		
R252	CF,(ERD10TJ560A)	56Ω,±5%,1/8W		
R253	CF,(ERD10TJ560A)	56Ω,±5%,1/8W		
R254	CF,(ERD10TJ151A)	150Ω,±5%,1/8W		
R255	CF,(ERD10TJ510A)	51Ω,±5%,1/8W		
R256	CF,(ERD10TJ151A)	150Ω,±5%,1/8W		
R257	CF,(ERD10TJ510A)	51Ω,±5%,1/8W		
R258	CF,(ERD10TJ510A)	51Ω,±5%,1/8W		
R259	CF,(ERD10TJ510A)	51Ω,±5%,1/8W		
R260	CF,(ERD10TJ510A)	51Ω,±5%,1/8W		
R261	CF,(ERD10TJ510A)	51Ω,±5%,1/8W		
R262	CF,(ERD10TJ510A)	51Ω,±5%,1/8W		
R263	CF,(ERD10TJ330A)	33Ω,±5%,1/8W		
R264	CF,(ERD10TJ221A)	220Ω,±5%,1/8W		
R265	CF,(ERD10TJ221A)	220Ω,±5%,1/8W		
R266	CF,(ERD10TJ330A)	33Ω,±5%,1/8W		
R267	CF,(ARD25T101J)	100Ω,±5%,1/4W		
R268	CF,(ERD10TJ330A)	33Ω,±5%,1/8W		
R269	CF,(ERD10TJ510A)	51Ω,±5%,1/8W		
R270	CF,(ERD10TJ122A)	1.2kΩ,±5%,1/8W		
R271	CF,(ERD10TJ * A)	10 to 100Ω,±5%,1/8W		*
R272	CF,(ERD10TJ * A)	10 to 100Ω,±5%,1/8W		*
R273	CF,(ERD10TJ122A)	1.2kΩ,±5%,1/8W		
R274	CF,(ERD10TJ151A)	150Ω,±5%,1/8W		
R275	CF,(ERD10TJ220A)	22Ω,±5%,1/8W		
R276	CF,(ERD10TJ750A)	75Ω,±5%,1/8W		
R277	CF,(ERD10TJ750A)	75Ω,±5%,1/8W		
R278	CF,(ERD10TJ220A)	22Ω,±5%,1/8W		
R279	CR,(ERD10TJ151A)	150Ω,±5%,1/8W		
R280	CF,(ARD25T561J)	560Ω,±5%,1/4W		
R281	CF,(ERD10TJ680A)	68Ω,±5%,1/8W		
R282	CF,(ARD25T471J)	470Ω,±5%,1/4W		

( ): Manufacturer's part number
* : Selected at factory

Parts List : T-24 OUTPUT 22

CKT REF	DESCRIPTION	RATING		NOTE
R283	CF,(ARD25T * J)	100Ω to10kΩ,±5%,1/4W		Q'ty 1 to 3, *
R284	CF,(ERD10TJ680A)	68Ω,±5%,1/8W		
R285	CF,(ARD25T561J)	560Ω,±5%,1/4W		
R286	CF,(ERD10TJ271A)	270Ω,±5%,1/8W		
R287	CF,(ERD10TJ271A)	270Ω,±5%,1/8W		
R288	CF,(ERD10TJ101A)	100Ω,±5%,1/8W		
R289	CF,(ERD10TJ101A)	100Ω,±5%,1/8W		
R290	CF,(ERD10TJ681A)	680Ω,±5%,1/8W		
R291	CF,(ERD10TJ510A)	51Ω,±5%,1/8W		
R292	CF,(ERD10TJ510A)	51Ω,±5%,1/8W		
R293	CF,(ERD10TJ152A)	1.5kΩ,±5%,1/8W		
R294	CF,(ERD10TJ101A)	100Ω,±5%,1/8W		
R295	CF,(ERD10TJ681A)	680Ω,±5%,1/8W		
R296	CF,(ERD10TJ821A)	820Ω,±5%,1/8W		
R297	CF,(ERD10TJ151A)	150Ω,±5%,1/8W		
R298	CF,(ERD10TJ391A)	390Ω,±5%,1/8W		
R299	Var,MF,(RJ-6P 500Ω)	500Ω,1/2W		
R300	CF,(ERD10TJ101A)	100Ω,±5%,1/8W		
R301	CF,(ERD10TJ271A)	270Ω,±5%,1/8W		
R302	CF,(ERD10TJ471A)	470Ω,±5%,1/8W		
R303	CF,(ERD10TJ510A)	51Ω,±5%,1/8W		
R304	CF,(ERD10TJ510A)	51Ω,±5%,1/8W		
R305	Not assigned			
R306	CF,(ERD10TJ510A)	51Ω,±5%,1/8W		
R307	Not assigned			
R308	CF,(ERD10TJ681A)	680Ω,±5%,1/8W		
R309	CF,(ERD10TJ101A)	100Ω,±5%,1/8W		
R310	CF,(ERD10TJ510A)	51Ω,±5%,1/8W		
R311	CF,(ERD10TJ510A)	51Ω,±5%,1/8W		
R312	CF,(ERD10TJ152A)	1.5kΩ,±5%,1/8W		
R313	Not assigned			
R314	CF,(ERD10TJ154A)	150kΩ,±5%,1/8W		
R315	Not assigned			
R316	CF,(ERD10TJ510A)	51Ω,±5%,1/8W		
R317	Not assigned			
R318	Not assigned			
R319	Not assigned			
R320	Not assigned			
R321	CF,(ERD10TJ510A)	51Ω,±5%,1/8W		
R322	CF,(ERD10TJ151A)	150Ω,±5%,1/8W		
R323	CF,(ERD10TJ560A)	56Ω,±5%,1/8W		
R324	CF,(ERD10TJ510A)	51Ω,±5%,1/8W		
R325	CF,(ERD10TJ510A)	51Ω,±5%,1/8W		

( ): Manufacturer's part number
* : Selected at factory

Parts List : T-24 OUTPUT 22

CKT REF	DESCRIPTION	RATING		NOTE
R326	CF,(ERD10TJ510A)	51Ω,±5%,1/8W		
R327	CF,(ERD10TJ560A)	56Ω,±5%,1/8W		
R328	CF,(ERD10TJ151A)	150Ω,±5%,1/8W		
R329	CF,(ERD10TJ510A)	51Ω,±5%,1/8W		
R330	CF,(ERD10TJ330A)	33Ω,±5%,1/8W		
R331	CF,(ERD10TJ330A)	33Ω,±5%,1/8W		
R332	CF,(ERD10TJ330A)	33Ω,±5%,1/8W		
R333	CF,(ERD10TJ330A)	33Ω,±5%,1/8W		
R334	CF,(ERD10TJ102A)	1kΩ,±5%,1/8W		
R335	CF,(ERD10TJ821A)	820Ω,±5%,1/8W		
R336	CF,(ERD10TJ221A)	220Ω,±5%,1/8W		
R337	CF,(ERD10TJ221A)	220Ω,±5%,1/8W		
R338	CF,(ERD10TJ151A)	150Ω,±5%,1/8W		
R339	CF,(ERD10TJ750A)	75Ω,±5%,1/8W		
R340	CF,(ERD10TJ510A)	51Ω,±5%,1/8W		
R341	CF,(ERD10TJ510A)	51Ω,±5%,1/8W		
R342	CF,(ERD10TJ510A)	51Ω,±5%,1/8W		
R3431	CF,(ERD10TJ510A)	51Ω,±5%,1/8W		
R344	Not assigned	51Ω,±5%,1/8W		
R345	CF,(ERD10TJ331A)	330Ω,±5%,1/8W		
R346	Var,MF,(RJ-6P 500Ω)	500Ω,1/2W		
R347	CF,(ERD10TJ510A)	51Ω,±5%,1/8W		
R348	CF,(ERD10TJ510A)	51Ω,±5%,1/8W		
R349	CF,(ERD10TJ510A)	51Ω,±5%,1/8W		
R350	CF,(ERD10TJ510A)	51Ω,±5%,1/8W		
R351	CF,(ERD10TJ510A)	51Ω,±5%,1/8W		
R352	CF,(ERD10TJ510A)	51Ω,±5%,1/8W		
R353	CF,(ERD10TJ510A)	51Ω,±5%,1/8W		
R354	CF,(ERD10TJ750A)	75Ω,±5%,1/8W		
R355	CF,(ERD10TJ151A)	150Ω,±5%,1/8W		
R356	CF,(ERD10TJ821A)	820Ω,±5%,1/8W		
R357	CF,(ERD10TJ102A)	1kΩ,±5%,1/8W		
R358	CF,(ERD10TJ510A)	51Ω,±5%,1/8W		
R359	CF,(ERD10TJ510A)	51Ω,±5%,1/8W		
R360	CF,(ERD10TJ102A)	1kΩ,±5%,1/8W		
R361	CF,(ERD10TJ152A)	1.5kΩ,±5%,1/8W		
R362	Var,MF,(RJ-6P 500Ω)	500Ω,1/2W		
R363	CF,(ERD10TJ391A)	390Ω,±5%,1/8W		
R364	CF,(ERD10TJ470A)	47Ω,±5%,1/8W		
R365	CF,(ARD25T131J)	130Ω,±5%,1/4W		
R366	CF,(ARD25T131J)	130Ω,±5%,1/4W		
R367	CF,(ERD10TJ510A)	51Ω,±5%,1/8W		
R368	CF,(ERD10TJ471A)	470Ω,±5%,1/8W		
R369	CF,(ERD10TJ102A)	1kΩ,±5%,1/8W		
R370	CF,(ERD10TJ560A)	56Ω,±5%,1/8W		

( ): Manufacturer's part number
* : Selected at factory

Parts List : T-24 OUTPUT 22

CKT REF	DESCRIPTION	RATING		NOTE
R371	Var,MF,(6P 1kΩ)	1kΩ,1/2W		
R372	CF,(ARD25T131J)	130Ω,±5%,1/4W		
R373	CF,(ERD10TJ330A)	33Ω,±5%,1/8W		
R374	CF,(ERD10TJ330A)	33Ω,±5%,1/8W		
R375	CF,(ERD10TJ151A)	150Ω,±5%,1/8W		
R376	CF,(ARD25T131J)	130Ω,±5%,1/4W		
R377	CF,(ERD10TJ820A)	82Ω,±5%,1/8W		
R378	Var,MF,(RJ-6P 100Ω)	100Ω,1/2W		
R379	CF,(ARD25T131J)	130Ω,±5%,1/4W		
R380	CF,(ERD10TJ510A)	51Ω,±5%,1/8W		
R381	CF,(ERD10TJ471A)	470Ω,±5%,1/8W		
R382	CF,(ERD10TJ102A)	1kΩ,±5%,1/8W		
R383	CF,(ERD10TJ510A)	51Ω,±5%,1/8W		
R384	Var,MF,(RJ-6P 1kΩ)	1kΩ,1/2W		
R385	CF,(ARD25T131J)	130Ω,±5%,1/4W		
R386	CF,(ERD10TJ330A)	33Ω,±5%,1/8W		
R387	CF,(ERD10TJ330A)	33Ω,±5%,1/8W		
R388	CF,(ERD10TJ153A)	15kΩ,±5%,1/8W		
R389	CF,(ARD25T131J)	130Ω,±5%,1/4W		
R390	CF,(ERD10TJ820A)	82Ω,±5%,1/8W		
R391	CF,(ERD10TJ * A)	470Ω to 47kΩ,±5%, 1/8W		Q'ty 1 to 3, *
R392	CF,(ERD10TJ821A)	820Ω,±5%,1/8W		
R393	CF,(ERD10TJ510A)	51Ω,±5%,1/8W		
R394	CF,(ERD10TJ820A)	82Ω,±5%,1/8W		
R395	CF,(ERD10TJ510A)	51Ω,±5%,1/8W		
R396	CF,(ERD10TJ271A)	270Ω,±5%,1/8W		
R397	CF,(ERD10TJ510A)	51Ω,±5%,1/8W		
R398	CF,(ERD10TJ820A)	82Ω,±5%,1/8W		
R399	CF,(ARD25T131J)	130Ω,±5%,1/4W		
R400	Var,MF,(RJ-6P 100Ω)	100Ω,1/2W		
R401	CF,(ERD10TJ820A)	82Ω,±5%,1/8W		
R402	CF,(ERD10TJ820A)	82Ω,±5%,1/8W		
R403	CF,(ERD10TJ221A)	220Ω,±5%,1/8W		
R404	CF,(ERD10TJ221A)	220Ω,±5%,1/8W		
R405	CF,(ERD10TJ * A)	100 to 330Ω,±5%,1/8W		Q'ty 1 to 3, *
R406	CF,(ERD10TJ102A)	1kΩ,±5%,1/8W		
R407	CF,(ERD10TJ510A)	51Ω,±5%,1/8W		
R408	CF,(ERD10TJ151A)	150Ω,±5%,1/8W		
R409	CF,(ERD10TJ102A)	1kΩ,±5%,1/8W		
R410	CF,(ERD10TJ821A)	820Ω,±5%,1/8W		
R411	CF,(ERD10TJ750A)	75Ω,±5%,1/8W		
R412	CF,(ERD10TJ510A)	51Ω,±5%,1/8W		
R413	CF,(ERD10TJ510A)	51Ω,±5%,1/8W		

( ): Manufacturer's part number 44W83025 18/21
* : Selected at factory

Parts List : T-24 OUTPUT 22

CKT REF	DESCRIPTION	RATING		NOTE
R413	CF,(ERD10TJ510A)	51Ω,±5%,1/8W		
R414	Not assigned			
R415	CF,(ARD25T271J)	270Ω,±5%,1/4W		
R416	CF,(ERD10TJ680A)	68Ω,±5%,1/8W		
R417	CF,(ERD10TJ510A)	51Ω,±5%,1/8W		
R418	CF,(ERD10TJ510A)	51Ω,±5%,1/8W		
R419	CF,(ERD10TJ271A)	270Ω,±5%,1/8W		
R420	Var,MF,(RJ-6P 500Ω)	500Ω,1/2W		
R421	CF,(ERD10TJ681A)	680Ω,±5%,1/8W		
R422	CF,(ERD10TJ510A)	51Ω,±5%,1/8W		
R423	CF,(ERD10TJ151A)	150Ω,±5%,1/8W		
R424	CF,(ERD10TJ680A)	68Ω,±5%,1/8W		
R425	CF,(ERD10TJ510A)	51Ω,±5%,1/8W		
R426	CF,(ERD10TJ820A)	82Ω,±5%,1/8W		
R427	CF,(ERD10TJ330A)	33Ω,±5%,1/8W		
R428	CF,(ARD25T131J)	130Ω,±5%,1/4W		
R429	CF,(ERD10TJ151A)	150Ω,±5%,1/8W		
R430	CF,(ERD10TJ471A)	470Ω,±5%,1/8W		
R431	CF,(ERD10TJ330A)	33Ω,±5%,1/8W		
R432	CF,(ERD10TJ471A)	470Ω,±5%,1/8W		
R433	Var,MF,(RJ-6P 500Ω)	500Ω,1/2W		
R434	CF,(ERD10TJ681A)	680Ω,±5%,1/8W		
R435	CF,(ERD10TJ510A)	51Ω,±5%,1/8W		
R436	CF,(ERD10TJ151A)	150Ω,±5%,1/8W		
R437	CF,(ERD10TJ680A)	68Ω,±5%,1/8W		
R438	CF,(ERD10TJ510A)	51Ω,±5%,1/8W		
R439	CF,(ERD10TJ820A)	82Ω,±5%,1/8W		
R440	CF,(ERD10TJ330A)	33Ω,±5%,1/8W		
R441	CF,(ARD25T131J)	130Ω,±5%,1/4W		
R442	CF,(ERD10TJ151A)	150Ω,±5%,1/8W		
R443	CF,(ERD10TJ471A)	470Ω,±5%,1/8W		
R444	CF,(ERD10TJ330A)	33Ω,±5%,1/8W		
R445	CF,(ERD10TJ471A)	470Ω,±5%,1/8W		
R446	Not assigned			
R447	Not assigned			
R448	Not assigned			
R449	CF,(ERD10TJ101A)	100Ω,±5%,1/8W		
R450	CF,(ERD10TJ101A)	100Ω,±5%,1/8W		
R451	CF,(ERD10TJ122A)	1.2kΩ,±5%,1/8W		
R452	CF,(ERD10TJ122A)	1.2kΩ,±5%,1/8W		
R453	CF,(ERD10TJ392A)	3.9kΩ,±5%,1/8W		
R454	CF,(ERD10TJ * A)	4.7k to 47kΩ,±5%, 1/8W		Q'ty 1 to 3, *
R455	CF,(ERD10TJ * A)	470Ω to 4.7kΩ,±5%, 1/8W		Q'ty 1 to 3, *

( ): Manufacturer's part number 44W83025 19/21
* : Selected at factory

Parts List : T-24 OUTPUT 22

CKT REF	DESCRIPTION	RATING		NOTE
R456	Var,MF,(RJ-6P 2kΩ)	2kΩ,1/2W		
R457	CF,(ERD10TJ272A)	2.7kΩ,±5%,1/8W		
R458	CF,(ERD10TJ510A)	51Ω,±5%,1/8W		
R459	CF,(ERD10TJ820A)	82Ω,±5%,1/8W		
R460	CF,(ERD10TJ820A)	82Ω,±5%,1/8W		
R461	CF,(ERD10TJ510A)	51Ω,±5%,1/8W		
R462	CF,(ERD10TJ510A)	51Ω,±5%,1/8W		
R463	CF,(ERD10TJ * A)	10 to 100Ω,±5%,1/8W		*
R464	CF,(ERD10TJ * A)	10 to 100Ω,±5%,1/8W		*
R465	Not assigned			
R466	Not assigned			
R467	CF,(ERD10TJ820A)	82Ω,±5%,1/8W		
R468	CF,(ERD10TJ820A)	82Ω,±5%,1/8W		
R469	CF,(ERD10TJ101A)	100Ω,±5%,1/8W		
R470	CF,(ERD10TJ222A)	2.2kΩ,±5%,1/8W		
R471	CF,(ERD10TJ103A)	10kΩ,±5%,1/8W		
R472	CF,(ERD10TJ152A)	1.5kΩ,±5%,1/8W		
R473	CF,(ERD10TJ103A)	10kΩ,±5%,1/8W		
R474	CF,(ERD10TJ * A)	1k to 22kΩ,±5%,1/8W		Q'ty 1 to 3, *
R475	CF,(ERD10TJ151A)	150Ω,±5%,1/8W		
R476	Not assigned			
R477	CF,(ARD25T750J)	75Ω,±5%,1/8W		
R478	CF,(ERD10TJ510A)	51Ω,±5%,1/8W		
R479	CF,(ERD10TJ510A)	51Ω,±5%,1/8W		
R480	CF,(ERD10TJ2R2A)	2.2Ω,±5%,1/8W		
R481	CF,(ERD10TJ2R2A)	2.2Ω,±5%,1/8W		
R482	Var,MF,(RJ-6P 500Ω)	500Ω,1/2W		
R483	CF,(ERD10TJ821A)	820Ω,±5%,1/8W		
R484	CF,(ERD10TJ681A)	680Ω,±5%,1/8W		
R485	CF,(ERD10TJ680A)	68Ω,±5%,1/8W		
R486	CF,(ERD10TJ680A)	68Ω,±5%,1/8W		
R487	CF,(ERD10TJ331A)	330Ω,±5%,1/8W		
R488	CF,(ERD10TJ331A)	330Ω,±5%,1/8W		
R489	CF,(ERD10TJ470A)	47Ω,±5%,1/8W		
R490	CF,(ERD10TJ470A)	47Ω,±5%,1/8W		
R491	CF,(ERD10TJ510A)	51Ω,±5%,1/8W		
R492	CF,(ERD10TJ510A)	51Ω,±5%,1/8W		
R493	CF,(ERD10TJ680A)	68Ω,±5%,1/8W		
R494	CF,(ERD10TJ680A)	68Ω,±5%,1/8W		
R495	CF,(ERD10TJ152A)	1.5kΩ,±5%,1/8W		
R496	Var,MF,(RJ-6P 500Ω)	500Ω,1/2W		
R497	CF,(ARD25T750J)	75Ω,±5%,1/4W		
R498	CF,(ERD10TJ510A)	51Ω,±5%,1/8W		
R499	CF,(ERD10TJ510A)	51Ω,±5%,1/8W		
R500	Var,MF,(RJ-6P 500Ω)	500Ω,1/2W		

( ): Manufacturer's part number 44W83025 20/21
* : Selected at factory

Parts List : T-24 OUTPUT 22

CKT REF	DESCRIPTION	RATING		NOTE
R501	CF,(ERD10TJ152A)	1.5kΩ,±5%,1/8W		
R502	CF,(ERD10TJ681A)	680Ω,±5%,1/8W		
R503	CF,(ERD10TJ510A)	51Ω,±5%,1/8W		
R504	CF,(ERD10TJ510A)	51Ω,±5%,1/8W		
R505	CF,(ERD10TJ331A)	330Ω,±5%,1/8W		
R506	CF,(ERD10TJ331A)	330Ω,±5%,1/8W		
R507	CF,(ERD10TJ510A)	51Ω,±5%,1/8W		
R508	CF,(ERD10TJ510A)	51Ω,±5%,1/8W		
R509	CF,(ERD10TJ101A)	100Ω,±5%,1/8W		
R510	CF,(ERD10TJ101A)	100Ω,±5%,1/8W		
R511	CF,(ARD25T561J)	560Ω,±5%,1/4W		
R512	CF,(ARD25T561J)	560Ω,±5%,1/4W		
R513	CF,(ARD25T681J)	680Ω,±5%,1/4W		
R514	CF,(ARD25T681J)	680Ω,±5%,1/4W		
R515	CF,(ERD10TJ151A)	150Ω,±5%,1/8W		
R516	CF,(ERD10TJ * A)	100Ω to 1kΩ,±5%,1/8W		Q'ty 1 to 3, *
R517	CF,(ERD10TJ * A)	100Ω to 1kΩ,±5%,1/8W		Q'ty 1 to 3, *
R518	CF,(ERD10TJ2R2A)	2.2Ω,±5%,1/8W		
R519	CF,(ERD10TJ2R2A)	2.2Ω,±5%,1/8W		
R520	CF,(ERD10TJ * A)	100Ω to 1kΩ,±5%,1/8W		Q'ty 1 to 3, *
R521	CF,(ERD10TJ * A)	100Ω to 1kΩ,±5%,1/8W		Q'ty 1 to 3, *
R522	CF,(ERD10TJ510A)	51Ω,±5%,1/8W		
R523	CF,(ERD10TJ510A)	51Ω,±5%,1/8W		
R524	CF,(ERD10TJ102A)	1kΩ,±5%,1/8W		
R525	CF,(ERD10TJ * A)	10Ω to 1kΩ,±5%,1/8W		Q'ty 1 to 3, *
R526	CF,(ERD10TJ510A)	51Ω,±5%,1/8W		

( ): Manufacturer's part number 44W83025 21/21
* : Selected at factory

Parts List : T-Z5 CONTROL 23

CKT REF	DESCRIPTION	RATING		NOTE
C 1	Elect,(CE04C1A470)	47μF,±20%,10V		
C 2	Elect,(CE04C1C330)	33μF,±20%,16V		
C 3	Elect,(CE04C1C330)	33μF,±20%,16V		
C 4	Elect,(CE04C1A470)	47μF,±20%,10V		
C 5	Elect,(CE04C1J2R2)	2.2μF,±20%,63V		
C 6	Elect,(CE04C1J4R7)	4.7μ,±20%,63V		
C 7	Cer,(CK924F1H104Z)	0.1μF,+80/-20%,50V		
C 8	Cer,(CK924F1H104Z)	0.1μF,+80/-20%,50V		
C 9	Elect,(CE04C1J2R2)	2.2μF,±20%,63V		
C10	Elect,(CE04C1C330)	33μF,±20%,16V		
C11	Elect,(CE04C1C330)	33μF,±20%,16V		
C12	Elect,(CE04C1A470)	47μF,±20%,10V		
C13 to C28	Cer,(CK924F1H104Z)	0.1μF,+80/-20%,50V		
C29	Not assigned			
C30	Cer,(CK924F1H104Z)	0.1μF,+80/-20%,50V		
C31	Cer,(CK924F1H104Z)	0.1μF,+80/-20%,50V		
J 1	Pattern			
J 2	Plug, (CNF3-20P-2.54DS)			
J 3	Plug, (CNF3-34P-2.54DS)			
Q 1	IC,(74LS245)			
Q 2	IC,(74LS244)			
Q 3	IC,(μPD780C-1)			
Q 4	IC,(LH0082A)			
Q 5	IC,(74LS244)			
Q 6	IC,(TC4093BP)			
Q 7	IC,(7438)			
Q 8	IC,(74LS32)			
Q 9	IC,(TL7705CP-B)			
Q10	IC,(TC5565PL-15)			
Q11	IC,(74LS244)			
Q12	IC,(74LS244)			
Q13	IC,(74LS14)			
Q14	IC,(74LS123)			
Q15	IC,(TC5565PL-15)			
Q16	IC,(74LS138)			
Q17	IC,(74LS245)			
Q18	IC,(74LS139)			

( ): Manufacturer's part number
* : Selected at factory

Parts List : T-Z5 CONTROL 23

CKT REF	DESCRIPTION	RATING		NOTE
C19	IC,(74LS74A)			
Q20	IC,(μPD27C256D-20)			
Q21	IC,(74LS11)			
Q22	IC,(74LS244)			
Q23	IC,(μPD8255AC-2)			
Q24	IC,(μPC393C)			
Q25	Not assigned			
Q26	IC,(74LS245)			
Q27	IC,(74LS244)			
Q28	IC,(74LS244)			
Q29	IC,(PC817)			
Q30	Di,(1SS97)			
Q31	Di,(1S953)			
Q32	Di,(1SS97)			
Q33	IC,(74LS32)			
Q34	IC,(74LS244)			
R 1	Not assigned			
R 2	CF,(ARD25T103J)	10kΩ,±5%,1/4W		
R 3	CF,(ARD25T103J)	10kΩ,±5%,1/4W		
R 4	CF,(ARD25T151J)	150Ω,±5%,1/4W		
R 5	CF,(ARD25T104J)	100kΩ,±5%,1/4W		
R 6	CF,(ARD25T472J)	4.7kΩ,±5%,1/4W		
R 7	CF,(ARD25T103J)	10kΩ,±5%,1/4W		
R 8	CF,(ARD25T104J)	100kΩ,±5%,1/4W		
R 9	CF,(ARD25T222J)	2.2kΩ,±5%,1/4W		
R10	CF,(ARD25T222J)	2.2kΩ,±5%,1/4W		
R11	Single in-line array, (IHR-8-103JA)	10kΩ x 8,1/8W		
R12	Single in-line array, (IHR-8-103JA)	10kΩ x 8,1/8W		
R13	CF,(ARD25T103J)	10kΩ,±5%,1/4W		
R14	CF,(ARD25T103J)	10kΩ,±5%,1/4W		
R15	Single in-line array, (IHR-8-103JA)	10kΩ x 8,1/8W		
S 1	Dip,(BP-8)			
Z 1	XTAL OSC,(TCO-707F)	8MHz		
Z 2	Battery,(ER6(AA))	3.6V		

( ): Manufacturer's part number
* : Selected at factory

Parts List : T-Z6 POWER SUPPLY 24

CKT REF	DESCRIPTION	RATING		NOTE
C 1	Elect,(CE04C1J470)	47μF,±20%,63V		
C 2	Elect,(CE04C1E330)	33μF,±20%,25V		
C 3	Elect,(CE04C1A470)	47μF,±20%,10V		
C 4	Elect,(CE04C1A470)	47μF,±20%,10V		
C 5	Elect,(CE04C1E330)	33μF,±20%,25V		
C 6	Elect,(CE04C1J470)	47μF,±20%,63V		
C 7	Elect,(SXE25VB-1000 φ12.5 x 25L)	1000μF,±20%,25V		
C 8	Elect,(SXE16VB-1200 φ12.5 x 20L)	1200μF,±20%,16V		
C 9	Elect,(SXE16VB-1200 φ12.5 x 20L)	1200μF,±20%,16V		
C10	Elect,(SXE16VB-1200 φ12.5 x 20L)	1200μF,±20%,16V		
C11	Elect,(SXE16VB-1200 φ12.5 x 20L)	1200μF,±20%,16V		
C12	Elect,(SXE16VB-1200 φ12.5 x 20L)	1200μF,±20%,16V		
C13	Elect,(SXE16VB-1200 φ12.5 x 20L)	1200μF,±20%,16V		
C14	Elect,(SXE16VB-1200 φ12.5 x 20L)	1200μF,±20%,16V		
C15	Elect,(SXE16VB-1200 φ12.5 x 20L)	1200μF,±20%,16V		
C16	Elect,(SXE16VB-1200 φ12.5 x 20L)	1200μF,±20%,16V		
C17	Plast,(ECQ-P1 102FZ)	1000pF,±1%,100V		
C18	Not assigned			
C19	Not assigned			
C20	Not assigned			
C21	Plast,(ECQ-P1 102FZ)	1000pF,±1%,100V		
C22	Cer,(CC924CH1H102J)	1000pF,±5%,50V		
C23	Cer,(CK924F1H104Z)	0.1μF,+80/-20%,50V		
C24	Not assigned			
C25	Cer,(CK924F1H104Z)	0.1μF,+80/-20%,50V		
C26	Cer,(CK924F1H104Z)	0.1μF,+80/-20%,50V		
C27	Cer,(CK924F1H104Z)	0.1μF,+80/-20%,50V		
C28	Cer,(CK924F1H104Z)	0.1μF,+80/-20%,50V		
C29	Plast,(ECQ-P1 102FZ)	1000pF,±1%,100V		
C30	Plast,(ECQ-P1 102FZ)	1000pF,±1%,100V		
C31	Plast,(ECQ-P1 102FZ)	1000pF,±1%,100V		
C32	Plast,(ECQ-P1 102FZ)	1000pF,±1%,100V		
C33	Elect,(CE04C1A470)	47μF,+20%,10V		
C34	Elect,(CE04C1A470)	47μF,±20%,10V		
C35	Elect,(CE04C1E330)	33μF,±20%,25V		

( ): Manufacturer's part number
* : Selected at factory

Parts List : T-Z6 POWER SUPPLY 24

CKT REF	DESCRIPTION	RATING		NOTE
C36	Elect,(CE04C1J470)	47μF,±20%,63V		
C37	Elect,(SXE16VB-1200 φ12.5 x 20L)	1200μF,±20%,16V		
C38	Elect,(SXE25VB-1000 φ12.5 x 25L)	1000μF,±20%,25V		
C39	Elect,(SXE25VB-1000 φ12.5 x 25L)	1000μF,±20%,25V		
C40	Elect,(SXE50VB-820 φ16 x 25L)	820μF,±20%,50V		
C41	Elect,(CE04C1A470)	47μF,+20%,10V		
C42	Elect,(CE04C1C330)	33μF,±20%,16V		
C43	Elect,(CE04C1C330)	33μF,+20%,16V		
C44	Not assigned			
C45	Not assigned			
C46	Plast,(ECQ-V1H474JW)	0.47μF,±5%,50V		
C47	Plast,(ECQ-V1H474JW)	0.47μF,±5%,50V		
C48	Plast,(ECQ-V1H474JW)	0.47μF,±5%,50V		
C49	Plast,(ECQ-V1H474JW)	0.47μF,±5%,50V		
C50	Plast,(ECQ-V1H474JW)	0.47μF,±5%,50V		
C51	Not assigned			
C52	Not assigned			
C53	Cer,(CK924F1H104Z)	0.1μF,+80/-20%,50V		
C54	Not assigned			
C55	Cer,(CK924F1H104Z)	0.1μF,+80/-20%,50V		
C56	Not assigned			
C57	Not assigned			
C58	Not assigned			
C59	Not assigned			
C60	Cer,(CK924F1H104Z)	0.1μF,+80/-20%,50V		
F 1	Fuse,(MF51NN250V 5A DC01)	5A,250V		
F 2	Fuse,(MF51NN250V 5A DC01)	5A,250V		
F 3	Fuse,(MF51NN250V 6.3A DC01)	6.3V,250V		
F 4	Fuse,(MF51NN250V 6.3A DC01)	6.3V,250V		
F 5	Fuse,(MF51NN250V 1.6A DC01)	1.6A,250V		
F 6	Fuse,(MF51NN250V 2A DC01)	2A,250V		
F 7	Fuse,(MF51NN250V 1.6A DC01)	1.6A,250V		
F 8	Fuse,(MF51NN250V 0.2A DC01)	0.2A,250V		

( ): Manufacturer's part number
* : Selected at factory

Parts List : T-Z6 POWER SUPPLY 24

CKT REF	DESCRIPTION	RATING		NOTE
F 9	Fuse,(MF51NN250V 2A DC01)	2A,250V		
J 1	Pattern			
L 1	Coil,(SK-21C-060-550)	550μH		
L 2	Coil,(SK-24S-110-100)	100μH		
L 3	Coil,(SK-24S-110-100)	100μH		
L 4	Coil,(SK-33S-140-150)	150μH		
L 5	Coil,(SK-21C-060-550)	550μH		
L 6	Coil,(SK-21C-060-550)	550μH		
L 7	Coil,(SK-21C-060-550)	550μH		
L 8	Coil,(SK-24S-045-3500)	3.5mH		
L 9	Coil,(SC-10-100)	1mH		
L10	Coil,(SC-10-100)	1mH		
L11	Coil,(SC-10-100)	1mH		
M 1	Timer,(TM-0)	50/60H		
Q 1	Tr,(2SC1826)			
Q 2	Tr,(2SA1154)			
Q 3	Tr,(2SC3164)			
Q 4	Tr,(2SC3164)			
Q 5	Tr,(2SC3164)			
Q 6	Tr,(2SC3164)			
Q 7	IC,(μPC494C)			
Q 8	IC,(μPC494C)			
Q 9	IC,(μPC451C)			
Q10	IC,(μPC451C)			
Q11	IC,(S1-3052V)			
Q12	IC,(S1-3122V)			
Q13	IC,(S1-3122V)			
Q14	IC,(μA78MGUIC)			
Q15	Photocoupler,(PC618)			
Q16	Photocoupler,(PC618)			
Q17	Di,breakdown,(RD13E)	12.11 to 13.66V, 400mW		
Q18	Not assigned			
Q19	Rectifier,(V19E-1)			
Q20	Rectifier,(V19E-1)			

( ): Manufacturer's part number
* : Selected at factory

Parts List : T-Z6 POWER SUPPLY 24

CKT REF	DESCRIPTION	RATING		NOTE
Q21	Rectifier,(V19E-1)			
Q22	Rectifier,(V19E-1)			
Q23	Rectifier,(V19E-1)			
Q24	Rectifier,(V19E-1)			
Q25	Rectifier,(V19E-1)			
Q26	Rectifier,(V19E-1)			
Q27	Di,(1S955)			
Q28	Di,(1S955)			
Q29	Not assigned			
Q30	Di,breakdown,(RD2.7E)	2.5 to 2.93V,400mW		
Q31	Rectifier,(V19E-1)			
Q32	Rectifier,(V19E-1)			
Q33	Rectifier,(V19E-1)			
Q34	Rectifier,(V19E-1)			
Q35	Rectifier,(V19E-1)			
Q36	Rectifier,(V19E-1)			
Q37	Di,(1S955)			
Q38	Di,(1S955)			
Q39	Not assigned			
Q40	Not assigned			
Q41	Rectifier,(S5KC20)			
Q42	Rectifier,(S10SC4MR)			
Q43	Rectifier,(S10SC4MR)			
Q44	Rectifier,(D5LC20)			
Q45	Rectifier,(D5LC20)			
Q46	Rectifier,(D5LC20)			
Q47	Rectifier,(D5LC20)			
Q48	Rectifier,(S5KC40)			
Q49	Di,breakdown,(RD2.7E)	2.5 to 2.93V,400mW		
Q50	Di,breakdown,(RD6.2E)	5.78 to 6.44V,400mW		
R 1	Not assigned			
R 2	Not assigned			
R 3	MF,(RS1FB4.7kΩJ)	4.7kΩ,±5%,1W		
R 4	MF,(RS2FB100ΩJ)	100Ω,±5%,2W		
R 5	CF,(ARD25T681J)	680Ω,±5%,1/4W		
R 6	CF,(ARD25T102J)	1kΩ,±5%,1/4W		
R 7	CF,(ARD25T332J)	3.3kΩ,±5%,1/4W		
R 8	CF,(ARD25T331J)	330Ω,±5%,1/4W		
R 9	CF,(ARD25T * J)	10k to 180kΩ,±5%, 1/4W		Q'ty 1 to 3, *
R10	CF,(ARD25T102J)	1kΩ,±5%,1/4W		
R11	Var,MF,(RJ-6P 500Ω)	500Ω,1/2W		
R12	CF,(ARD25T561J)	560Ω,±5%,1/4W		

( ): Manufacturer's part number
* : Selected at factory

Parts List : T-Z6 POWER SUPPLY 24

CKT REF	DESCRIPTION	RATING		NOTE
R13	CF,(ARD25T4[illegible]J)	470Ω,±5%,1/4W		
R14	CF,(ARD25T10[illegible]J)	10kΩ,±5%,1/4W		
R15	CF,(ARD25T[illegible]J)	220Ω,±5%,1/4W		
R16	CF,(ARD25T222J)	2.2kΩ,±5%,1/4W		
R17	CF,(ARD25T470J)	47Ω,±5%,1/4W		
R18	CF,(ARD25T100J)	10Ω,±5%,1/4W		
R19	CF,(ARD25T101J)	100Ω,±5%,1/4W		
R20	CF,(ARD25T470J)	47Ω,±5%,1/4W		
R21	CF,(ARD25T10[illegible]J)	10Ω,±5%,1/4W		
R22	CF,(ARD25T101J)	100Ω,±5%,1/4W		
R23	MF,(RS2FB47ΩJ)	47Ω,±5%,2W		
R24	MF,(RN14K2H470J)	47Ω,±5%,1/2W		
R25	MF,(RS2FB47ΩJ)	47Ω,±5%,2W		
R26	Not assigned			
R27	CF,(ARD25T332J)	3.3kΩ,±5%,1/4W		
R28	CF,(ARD25T331J)	330Ω,±5%,1/4W		
R29	Not assigned			
R30	CF,(ARD25T222J)	2.2kΩ,±5%,1/4W		
R31	Var,MF,(RJ-6S 1kΩ)	1kΩ,1/2W		
R32	CF,(ARD25T122J)	1.2kΩ,±5%,1/4W		
R33	CF,(ARD25T152J)	1.5kΩ,±5%,1/4W		
R34	CF,(ARD25T223J)	22kΩ,±5%,1/4W		
R35	CF,(ARD25T821J)	820Ω,±5%,1/4W		
R36	CF,(ARD25T222J)	2.2kΩ,±5%,1/4W		
R37	CF,(ARD25T470J)	47Ω,±5%,1/4W		
R38	CF,(ARD25T100J)	10Ω,±5%,1/4W		
R39	CF,(ARD25T101J)	100Ω,±5%,1/4W		
R40	CF,(ARD25T470J)	47Ω,±5%,1/4W		
R41	CF,(ARD25T100J)	10Ω,±5%,1/4W		
R42	CF,(ARD25T101J)	100Ω,±5%,1/4W		
R43	Not assigned			
R44	Not assigned			
R45	Not assigned			
R46	CF,(ARD25T220J)	22Ω,±5%,1/4W		
R47	MF,(RN14K2H470J)	47Ω,±5%,1/2W		
R48	MF,(RN14K2H470J)	47Ω,±5%,1/2W		
R49	Not assigned			
R50	Not assigned			
R51	Not assigned			
R52	Not assigned			
R53	MF,(RS1FB47ΩJ)	47Ω,±5%,1W		
R54	MF,(RS1FB47ΩJ)	47Ω,±5%,1W		
R55	MF,(RS1FB47ΩJ)	47Ω,±5%,1W		
R56	MF,(RN14K2H221J)	220Ω,±5%,1/2W		
R57	MF,(RN14K2H681J)	680Ω,±5%,1/2W		

( ): Manufacturer's part number
* : Selected at factory

Parts List : T-Z6 POWER SUPPLY 24

CKT REF	DESCRIPTION	RATING		NOTE
R58	MF,(RN14K2H681J)	680Ω,±5%,1/2W		
R59	MF,(RS2FB680ΩJ)	680Ω,±5%,2W		
R60	CF,(ARD25T223J)	22kΩ,±5%,1/4W		
R61	CF,(ARD25T472J)	4.7kΩ,±5%,1/4W		
R62	CF,(ARD25T332J)	3.3kΩ,±5%,1/4W		
R63	CF,(ARD25T102J)	1kΩ,±5%,1/4W		
R64	CF,(ARD25T105J)	1MΩ,±5%,1/4W		
R65	CF,(ARD25T * J)	4.7 to 100Ω,±5%,1/4W		Q'ty 0 or 1, *
R66	CF,(ARD25T * J)	4.7 to 100Ω,±5%,1/4W		Q'ty 0 or 1, *
R67	CF,(ARD25T * J)	4.7 to 100Ω,±5%,1/4W		Q'ty 0 or 1, *
R68	CF,(ARD25T * J)	4.7 to 100Ω,±5%,1/4W		Q'ty 0 or 1, *
T 1	Trans,(44T75381)			
T 2	Trans,(44T75381)			
T 3	Trans,(44T75381)			
T 4	Trans,(44T75381)			
T 5	Trans,(43T23594)			
T 6	Trans,(43T23595)			

( ): Manufacturer's part number
* : Selected at factory

Parts List : T-Z7 DISPLAY 25

CKT REF	DESCRIPTION	RATING		NOTE
C 1	Cer,(CK924F1H104Z)	0.1μF,+80/-20%,50V		
C 2	Cer,(CK924F1H104Z)	0.1μF,+80/-20%,50V		
C 3	Cer,(CK924F1H104Z)	0.1μF,+80/-20%,50V		
C 4	Cer,(CK924F1H104Z)	0.1μF,+80/-20%,50V		
C 5	Elect,(CZ02C1A470)	47μF,±20%,10V		
C 6	Cer,(CK924F1H104Z)	0.1μF,+80/-20%,50V		
C 7	Cer,(CK924F1H104Z)	0.1μF,+80/-20%,50V		
J 1	Connector, (CNF23-20D-AA050S)			
J 2	Plug,(DF1-2P-2.5DS)			
Q 1	IC,(μPA79C)			
Q 2	IC,(74LS156)			
Q 3	IC,(μPA79C)			
Q 4	IC,(74154)			
Q 5	IC,(74154)			
Q 6	IC,(74LS04)			
Q 7	IC,(μPD8279C-2)			
Q 8	IC,(μPD8279C-2)			
Q 9	Tr,(2SC1815) *			
Q10 to Q37	Tr,(2SA952)			
Q38	LED,(LN514GA)			
Q39	LED,(LN514GA)			
Q40	LED,(LN514GA)			
Q41	LED,(LN514GA)			
Q42	LED,(LN514GA)			
Q43	LED,(LN514GA)			
Q44 to Q58	LED,(LN513GA)			
Q59 to Q98	LED,(LN342GPH)			
Q99	LED,(LN442YPH)			
R 1	CF,(ARD25T102J)	1kΩ,+5%,1/4W		
R 2	CF,(ARD25T680J)	68Ω,±5%,1/4W		
R 3	CF,(ARD25T330J)	33Ω,±5%,1/4W		
R 4	Not assigned			
R 5	CF,(ARD25T102J)	1kΩ,±5%,1/4W		

( ): Manufacturer's part number
* : Selected at factory

44W83028 1/2

Parts List : T-Z7 DISPLAY 25

CKT REF	DESCRIPTION	RATING		NOTE
R 6	CF,(ARD25T472J)	4.7kΩ,+5%,1/4W		
R 7	SIL type,(EXB-F14V470J)	47Ω x 14,±5%,1/8W		
R 8	SIL type,(EXB-F14V330J)	33Ω x 14,±5%,1/8W		
R 9	SIL type,(EXB-F14V470J)	47Ω x 14,±5%,1/8W		
R10	SIL type,(EXB-F14V271J)	270Ω x 14,±5%,1/8W		
R11	SIL type,(EXB-F14V271J)	270Ω x 14,±5%,1/8W		
R12	SIL type,(EXB-F9E103J)	10kΩ x 9,±5%,1/8W		
R13	SIL type,(EXB-F9E103J)	10kΩ x 9,±5%,1/8W		
R14	SIL type,(EXB-F9E472J)	4.7kΩ x 9,±5%,1/8W		
R15	SIL type,(EXB-F14V271J)	270Ω x 14,±5%,1/8W		
R16	SIL type,(EXB-F9E103J)	10kΩ x 9,±5%,1/8W		
R17	SIL type,(EXB-F14V271J)	270Ω x 14,±5%,1/8W		
R18	SIL type,(EXB-F9E103J)	10kΩ x 9,±5%,1/8W		
R19	SIL type,(EXB-F9E472J)	4.7kΩ x 9,±5%,1/8W		
R20	SIL type,(EXB-F9E223J)	22kΩ x 9,±5%,1/8W		
R21	CF,(ARD25T621J)	620Ω,+5%,1/4W		
S 1 to S20	Pushbutton,(KEG10901)			
S21	Pushbutton,(HL20-LSYG)			
S22	Pushbutton,(HL20-LSYG)			
S23	Pushbutton,(HL20-LSYG)			
S24	Pushbutton,(KEG10901)			
S25	Pushbutton,(KEG10901)			
S26	Pushbutton,(KEG10901)			
S27	Pushbutton,(KEG10901)			
S28	Pushbutton,(KEG10901)			
S29	Pushbutton,(KEG10901)			
S30	Pushbutton,(KEG10901)			
S31	Pushbutton,(KEG10901)			
S32	Pushbutton,(KEG10901)			
S33	Pushbutton,(HL20-LSYG)			
S34	Pushbutton,(HL20-NS)			
S35	Pushbutton,(HL20-LSYG)			
S36	Pushbutton,(HL20-NS)			
S37	Pushbutton,(HL20-NS)			
S38	Pushbutton,(HL20-LSYG)			
S39	Pushbutton,(HL20-NS)			
S40	Pushbutton,(HL20-NS)			
S41	Pushbutton,(HL20-NS)			
S42	Pushbutton,(HL20-NS)			
S43	Pushbutton,(HL20-NS)			

( ): Manufacturer's part number
* : Selected at factory

44W83028 2/2

Parts List : T-Z8 50 Ω/75 Ω TRANSDUCER 26

CKT REF	DESCRIPTION	RATING		NOTE
C 1	Cer,(CK733F1H104Z)	0.1μF,+80/-20%,50V		
C 2	Cer,(CK733F1H104Z)	0.1μF,+80/-20%,50V		
C 3	Cer,(CK733F1H104Z)	0.1μF,+80/-20%,50V		
C 4	Cer,(CK733F1H104Z)	0.1μF,+80/-20%,50V		
C 5	Cer,(CK733F1H104Z)	0.1μF,+80/-20%,50V		
C 6	Cer,(CK733F1H104Z)	0.1μF,+80/-20%,50V		
C 7	Cer,(CK733F1H104Z)	0.1μF,+80/-20%,50V		
C 8	Cer,(CK733F1H104Z)	0.1μF,+80/-20%,50V		
J 1	Receptacle,(BNC-R-NI)			
J 2	Receptacle,(BNC-R-NI)			
J 3	Receptacle,(BNC-R-NI)			
J 4	Receptacle,(BNC-R-NI)			
J 5	Receptacle,(BNC-R-NI)			
J 6	Receptacle,(HRM-301B)			
J 7	Receptacle,(HRM-301B)			
J 8	Receptacle,(HRM-301B)			
J 9	Receptacle,(HEM-301B)			
J10	Receptacle,(HEM-301B)			
J11	Plug,(DF1-5P2.5DSA)			
K 1	Relay,(712-12)			
K 2	Relay,(712-12)			
K 3	Relay,(712-12)			
K 4	Relay,(712-12)			
K 5	Relay,(G5Y-154P(12V))			
Q 1	Di,(1S953)			
Q 2	Di,(1S953)			
Q 3	Di,(1S953)			
Q 4	Di,(1S953)			
Q 5	Di,(1S953)			
R 1	MF,(NRN1/4C4 150.5ΩD)	150.5Ω,+0.5%,1/4W		
R 2	MF,(NRN1/4C4 150.5ΩD)	150.5Ω,+0.5%,1/4W		
R 3	MF,(NRN1/4C4 150.5ΩD)	150.5Ω,+0.5%,1/4W		
R 4	MF,(NRN1/4C4 150.5ΩD)	150.5Ω,+0.5%,1/4W		
R 5	MF,(NRN1/4C4 150.5ΩD)	150.5Ω,+0.5%,1/4W		

( ): Manufacturer's part number
* : Selected at factory

44W83029 1/1

Parts List : T-Z9 MOTHER BOARD 27

CKT REF	DESCRIPTION	RATING		NOTE
C 1	Elect,(KXC100VB4R7)	4.7μF,+20%,100V		
C 2	Elect,(SME80LISN-1500050F)	15000μF,±20%,80V		
J 1	Connector, (225J-23621-587)			
J 2	Connector, (225J-23621-587)			
J 3	Connector, (225J-23621-587)			
J 4	Connector, (225J-23621-587)			
J 5	Connector, (225J-23621-587)			
J 6	Plug,(DF1-5P2.5DS)			
J 7	Connector, (CNF23-20D-AA40S)			
J 8	Plug,(DF1-3P2.5DSA)			
J 9	Plug,(DF1-2P2.5DSA)			
J10	Plug, (CNF3-20P-2.54DS)			
J11	Plug,(DF1-2P2.5DS)			
J12	Plug,(DF1-2P2.5DS)			
Q 1	Rectifier, (RB-152-LFB)			
Q 2	Di,breakdown,(RD5.1E)	4.8 to 5.37V,400mW		
R 1	MF,(RS2FB2.2kΩJ)	2.2kΩ,±5%,2W		
R 2	CF,(ARD25T121J)	120Ω,±5%,1/4W		
R 3	MF,(RS1FB3.3kΩJ)	3.3kΩ,+5%,1W		

( ): Manufacturer's part number
* : Selected at factory

44W83031 1/1

Parts List : T-Z13, R-Z13 GP-IB 28

CKT REF	DESCRIPTION	RATING		NOTE
C 1	Elect,(CE02C1A470)	47μF,+20%,10V		
C 2	Cer,(CK924F1H104Z)	0.1μF,+80/-20%,50V		
C 3	Cer,(CK924F1H104Z)	0.1μF,+80/-20%,50V		
C 4	Cer,(CK924F1H104Z)	0.1μF,+80/-20%,50V		
C 5	Cer,(CK924F1H104Z)	0.1μF,+80/-20%,50V		
C 6	Cer,(CK924F1H104Z)	0.1μF,+80/-20%,50V		
C 7	Cer,(CK924F1H104Z)	0.1μF,+80/-20%,50V		
C 8	Cer,(CK924F1H104Z)	0.1μF,+80/-20%,50V		
J 1	Pattern			
J 2	Connector, (57LE-20240-27CO-D35H)			
Q 1	IC,(75160A)			
Q 2	IC,(75162A)			
Q 3	IC,(μPD7210C)			
Q 4	IC,(74LS00)			
Q 5	IC,(74LS367A)			
Q 6	IC,(74LS240)			
Q 7	IC,(74LS74A)			
Q 8	IC,(74LS32)			
Q 9	IC,(74LS139)			
R 1	Single in-line array, (IHR-8-103JA)	10kΩ x 8,1/8W		
S 1	Dip,(BP-8)			

{ }: Manufacturer's part number
* : Selected at factory

44W83046 1/1

Parts List : T-Z14 (Option 10), R-Z14 (Option 11) RS-232C 29

CKT REF	DESCRIPTION	RATING		NOTE
C 1	Elect,(CE02C1A470)	47μF,±20%,10V		
C 2	Elect,(CE02C1C330)	33μF,±20%,16V		
C 3	Elect,(CE02C1C330)	33μF,±20%,16V		
C 4	Cer,(CC924CH1H151J)	150pF,±5%,50V		
C 5	Cer,(CK924F1H104Z)	0.1μF,+80/-20%,50V		
C 6	Cer,(CK924F1H104Z)	0.1μF,+80/-20%,50V		
C 7	Cer,(CK924F1H104Z)	0.1μF,+80/-20%,50V		
C 8	Cer,(CK924F1H104Z)	0.1μF,+80/-20%,50V		
C 9	Cer,(CK924F1H104Z)	0.1μF,+80/-20%,50V		
C10	Cer,(CK924F1H104Z)	0.1μF,+80/-20%,50V		
C11	Cer,(CK924F1H104Z)	0.1μF,+80/-20%,50V		
C12	Cer,(CK924F1H104Z)	0.1μF,+80/-20%,50V		
C13	Cer,(CK924F1H104Z)	0.1μF,+80/-20%,50V		
J 1	Pattern			
J 2	Connector, (DB-25SA-J4)			
Q 1	IC,(SN75189AN)			
Q 2	IC,(74LS240)			
Q 3	IC,(SN75188N)			
Q 4	IC,(μPD8251AFC)			
Q 5	IC,(74LS04)			
Q 6	IC,(74LS367A)			
Q 7	IC,(COM8146)			
Q 8	IC,(74LS139)			
R 1	Single in-line array, (IHR-8-103JA)	10kΩ x 8,1/8W		
R 2	Single in-line array, (IHR-4-103JA)	10kΩ x 4,1/8W		
S 1	Dip,(S-2031)			
X 1	Dip,(B-8A)			
X 1	XTAL OSC,(NX-5068)	5.0688MHz		

{ }: Manufacturer's part number
* : Selected at factory

44W83047 1/1

Parts List : ME522A Receiver 30

CKT REF	DESCRIPTION	RATING		NOTE
F 1	Fuse,(T***A 250V)	T***A,250V		
F 2	Fuse,(T***A 250V)	T***A,250V		
G 1	Fan,(109S005UL)			
J 1	Receptacle, (BNC-R-NI)			
J 2	Terminal with 10φ pinch,(349H7025D)			
J 3	Terminal with 10φ pinch,(349H7025D)			
J 4	Terminal with 10φ pinch,(349H7025D)			
J 5	Terminal with 10φ pinch,(349H7025D)			
J 6	Plug,(KC-P006)			
J 7	Plug,(KC-P006)			
J 8	Plug,(KC-LP008)			
J 9	Plug,(KC-LP008)			
J10	Plug,(27DP-LP-1.5)			
J11	Plug,(27DP-LP-1.5)			
J12	Plug,(27DP-LP-1.5)			
J13	Plug,(27DP-LP-1.5)			
J14	Not assigned			
J15	Not assigned			
J16	Connector, (CNF3-20D-AA50S)			
J17	Socket,(DF1-2S2.5R24)			
J18	Socket,(DF1-2S2.5R24)			
J19	Socket,(DF1-10S2.5R24)			
J20	Socket,(DF1-10S2.5R24)			
J21	Socket,(DF1-8S2.5R24)			
J22	Connector, (HIF3BA5B-20D-AA46S)			
J23	Connector, (HIF3BA5B-34D-AC46S)			
J24	Terminal,(A-12)			
J25	Socket, (DF1-5S2.5R24)			
J26	Socket,(DF1-5S2.5R24)			
J27	Socket,(DF1-2S2.5R24)			
J28	Socket,(DF1-2S2.5R24)			

{ }: Manufacturer's part number
* : Selected at factory

44W83032 1/2

Parts List : ME522A Receiver 30

CKT REF	DESCRIPTION	RATING		NOTE
D 1	Rectifier,(S15VB10)			
S 1	Pushbutton,(SDU3P2106)			
T 1	Trans,(44T85575)	245VA		
Z 1	INPUT PC Board			44W83033
Z 2	Not assigned			
Z 3	Not assigned			
Z 4	ERROR DETECTOR PC Board			44W83036
Z 5	COUNTER PC Board			44W83037
Z 6	CONTROL PC Board			44W83038
Z 7	POWER SUPPLY PC Board			44W83039
Z 8	DISPLAY PC Board			44W83040
Z 9	50 Ω/75 Ω TRANSDUCER PC Board			44W83041
Z10	MOTEHR BOARD PC Board			44W83043
Z11	SWITCH PC Board			44W83044
Z12	PRINTER UNIT Overall			44W85802
Z13	GP-IB PC Board			44W83046
Z14	RS-232C PC Board			44W83047 (Option 11)
Z15	NOISE FILTER, (FN362-4105)			

{ }: Manufacturer's part number
* : Selected at factory

44W83032 2/2

Parts List : R-Z1 INPUT 31

CKT REF	DESCRIPTION	RATING		NOTE
C 1	Cer,(CK924F1H104Z)	0.1μF,+80/-20%,50V		
C 2	Cer,(CK924F1H104Z)	0.1μF,+80/-20%,50V		
C 3	Cer,(CK924F1H104Z)	0.1μF,+80/-20%,50V		
C 4	Cer,(CK924F1H104Z)	0.1μF,+80/-20%,50V		
C 5	Cer,(CK924F1H104Z)	0.1μF,+80/-20%,50V		
C 6	Cer,(CK924C1H103M)	0.01μF,±20%,50V		
C 7	Cer,(CK924C1H103M)	0.01μF,±20%,50V		
C 8	Cer,(CK924F1H104Z)	0.1μF,+80/-20%,50V		
C 9	Cer,(CK924C1H103M)	0.01μF,±20%,50V		
C10	Cer,(CK924F1H104Z)	0.1μF,+80/-20%,50V		
C11	Cer,(CK924F1H104Z)	0.1μF,+80/-20%,50V		
C12	Cer,(CK924F1H104Z)	0.1μF,+80/-20%,50V		
C13	Cer,(CK924F1H104Z)	0.1μF,+80/-20%,50V		
C14	Cer,(CK924F1H104Z)	0.1μF,+80/-20%,50V		
C15	Cer,(CK924F1H104Z)	0.1μF,+80/-20%,50V		
C16	Cer,(CK924C1H103M)	0.01μF,±20%,50V		
C17	Cer,(CK924C1H103M)	0.01μF,±20%,50V		
C18	Cer,(CK924F1H104Z)	0.1μF,+80/-20%,50V		
C19	Cer,(CK924F1H104Z)	0.1μF,+80/-20%,50V		
C20	Cer,(CK924F1H104Z)	0.1μF,+80/-20%,50V		
C21	Elect,(CE04C1C330)	33μF,±20%,16V		
C22	Cer,(CK924F1H104Z)	0.1μF,+80/-20%,50V		
C23	Cer,(CK924F1H104Z)	0.1μF,+80/-20%,50V		
C24	Cer,(CK924F1H104Z)	0.1μF,+80/-20%,50V		
C25	Cer,(CK924F1H104Z)	0.1μF,+80/-20%,50V		
C26	Cer,(CK924F1H104Z)	0.1μF,+80/-20%,50V		
C27	Cer,(CK924F1H104Z)	0.1μF,+80/-20%,50V		
C28	Cer,(CK924F1H104Z)	0.1μF,+80/-20%,50V		
C29	Cer,(CK924F1H104Z)	0.1μF,+80/-20%,50V		
C30	Cer,(CK924C1H103M)	0.01μF,±20%,50V		
C31	Cer,(CK924C1H104M)	0.1μF,±20%,50V		
C32	Cer,(CK924F1H104Z)	0.1μF,+80/-20%,50V		
C33	Cer,(CK924F1H104Z)	0.1μF,+80/-20%,50V		
C34	Cer,(CK924F1H104Z)	0.1μF,+80/-20%,50V		
C35	Cer,(CK924C1H103M)	0.01μF,±20%,50V		
C36	Cer,(CK924C1H103M)	0.01μF,±20%,50V		
C37	Cer,(CK924F1H104Z)	0.1μF,+80/-20%,50V		
C38	Cer,(CK924F1H104Z)	0.1μF,+80/-20%,50V		
C39	Cer,(CK924F1H104Z)	0.1μF,+80/-20%,50V		
C40	Cer,(CK924F1H104Z)	0.1μF,+80/-20%,50V		
C41	Cer,(CK924F1H104Z)	0.1μF,+80/-20%,50V		
C42	Cer,(RPE113P105Z50)	1μF,+80/-20%,50V		
C43	Cer,(CK924F1H104Z)	0.1μF,+80/-20%,50V		
C44	Cer,(CK924F1H104Z)	0.1μF,+80/-20%,50V		
C45	Cer,(CK924F1H104Z)	0.1μF,+80/-20%,50V		

( ): Manufacturer's part number
* : Selected at factory

Parts List : R-Z1 INPUT 31

CKT REF	DESCRIPTION	RATING		NOTE
C46	Cer,(CK924F1H104Z)	0.1μF,+80/-20%,50V		
C47	Cer,(CK924F1H104Z)	0.1μF,+80/-20%,50V		
C48	Cer,(CK924F1H104Z)	0.1μF,+80/-20%,50V		
C49	Cer,(CK924F1H104Z)	0.1μF,+80/-20%,50V		
C50	Cer,(CK924F1H104Z)	0.1μF,+80/-20%,50V		
C51	Cer,(CK924F1H104Z)	0.1μF,+80/-20%,50V		
C52	Cer,(CC45CK1H010CY)	1pF,±0.25pF,50V		
C53	Cer,(CC45CH1H *JY)	15 to 33pF,±5%,50V		Q'ty 1 to 3, *
C54	Cer,(CK924F1H104Z)	0.1μF,+80/-20%,50V		
C55	Cer,(CK924F1H104Z)	0.1μF,+80/-20%,50V		
C56	Cer,(CK924F1H104Z)	0.1μF,+80/-20%,50V		
C57	Cer,(CK924F1H104Z)	0.1μF,+80/-20%,50V		
C58	Cer,(CK924F1H104Z)	0.1μF,+80/-20%,50V		
C59	Cer,(CK924F1H104Z)	0.1μF,+80/-20%,50V		
C60	Cer,(CK924F1H104Z)	0.1μF,+80/-20%,50V		
C61	Cer,(CK924F1H104Z)	0.1μF,+80/-20%,50V		
C62	Elect,(CE04C1C330)	33μF,±20%,16V		
C63	Cer,(CK924F1H104Z)	0.1μF,+80/-20%,50V		
C64	Cer,(CK924F1H104Z)	0.1μF,+80/-20%,50V		
C65	Cer,(CK924F1H104Z)	0.1μF,+80/-20%,50V		
C66	Cer,(CK924F1H104Z)	0.1μF,+80/-20%,50V		
C67	Cer,(CK924F1H104Z)	0.1μF,+80/-20%,50V		
C68	Cer,(CK924F1H104Z)	0.1μF,+80/-20%,50V		
C69	Cer,(CK924F1H104Z)	0.1μF,+80/-20%,50V		
C70	Cer,(CC45CK1H * CY)	0.5 to 2pF,±0.25pF, 50V		Q'ty 0 to 3, *
	Cer,(CC45CJ1H030CY)	3pF,±0.25pF,50V		
	Cer,(CC45CH1H * CY)	4 to 5pF,±0.25pF,50V		
C71 to C100	Cer,(CK924F1H104Z)	0.1μF,+80/-20%,50V		
C101	Cer,(CC924CH1H101J)	100pF,±5%,50V		
C102	Cer,(CK924F1H104Z)	0.1μF,+80/-20%,50V		
C103	Cer,(CK924F1H104Z)	0.1μF,+80/-20%,50V		
C104	Cer,(CK924F1H104Z)	0.1μF,+80/-20%,50V		
C105	Cer,(CK924F1H104Z)	0.1μF,+80/-20%,50V		
C106	Cer,(CK924F1H104Z)	0.1μF,+80/-20%,50V		
C107	Cer,(CK924F1H104Z)	0.1μF,+80/-20%,50V		
C108	Cer,(CK924F1H104Z)	0.1μF,+80/-20%,50V		
C109	Cer,(CK924F1H104Z)	0.1μF,+80/-20%,50V		
C110	Cer,(CC924CH1H * J)	100 to 220pF,±5%,50V		*
C111 to C134	Cer,(CK924F1H104Z)	0.1μF,+80/-20%,50V		

( ): Manufacturer's part number
* : Selected at factory

Parts List : R-Z1 INPUT 31

CKT REF	DESCRIPTION	RATING		NOTE
C135	Elect,(CE04C1C330)	33μF,±20%,16V		
C136	Cer,(CK924C1H103M)	0.01μF,±20%,50V		
C137	Cer,(CK924F1H104Z)	0.1μF,+80/-20%,50V		
C138	Cer,(CK924C1H103M)	0.01μF,±20%,50V		
C139	Cer,(CK924F1H104Z)	0.1μF,+80/-20%,50V		
C140	Elect,(CE04C1A470)	47μF,±20%,10V		
C141	Cer,(CK924F1H104Z)	0.1μF,+80/-20%,50V		
C142	Cer,(CK924F1H104Z)	0.1μF,+80/-20%,50V		
C143	Cer,(CK924F1H104Z)	0.1μF,+80/-20%,50V		
C144	Cer,(CK924F1H104Z)	0.1μF,+80/-20%,50V		
C145	Elect,(CE04C1C330)	33μF,±20%,16V		
C146	Cer,(CK924F1H104Z)	0.1μF,+80/-20%,50V		
C147	Elect,(CE04C1C330)	33μF,±20%,16V		
C148	Cer,(CK924F1H104Z)	0.1μF,+80/-20%,50V		
C149	Elect,(CE04C1A470)	47μF,±20%,10V		
C150	Cer,(CK924F1H104Z)	0.1μF,+80/-20%,50V		
C151	Elect,(CE04C1A470)	47μF,±20%,10V		
C152	Cer,(CK924C1H103M)	0.01μF,±20%,50V		
C153	Cer,(CK924F1H104Z)	0.1μF,+80/-20%,50V		
C154	Cer,(CK924F1H104Z)	0.1μF,+80/-20%,50V		
C155	Cer,(CK924F1H104Z)	0.1μF,+80/-20%,50V		
C156	Cer,(CC45CK1H. *CY)	0.5 to 2pF,±0.25pF, 50V		Q'ty 0 to 3, *
	Cer,(CC45CJ1H030CY)	3pF,±0.25pF,50V		
	Cer,(CC45CH1H *CY)	4 to 5pF,±0.25pF,50V		
J 1	Pattern			
J 2	Connector,(KC-R002)			
J 3	Connectro,(KC-R002)			
J 4	Connector, (27DP-R-PC-1)			
J 5	Connector, (27DP-R-PC-1)			
K 1	Relay,(SZ-2103)			
K 2	Relay,(SZ-2103)			
K 3	Relay,(SZ-2103)			
K 4	Relay,(SZ-2103)			
K 5	Relay,(SZ-2103)			
L 1	Coil,(10K17-25T)	0.065μH		
L 2 to L 22	Coil,(LC-1-G)	6nH		

( ): Manufacturer's part number
* : Selected at factory

Parts List : R-Z1 INPUT 31

CKT REF	DESCRIPTION	RATING		NOTE
Q 1	Di,(1S953)			
Q 2	Tr,(2SC3604)			
Q 3	Di,(ND587T-3B)			
Q 4	Tr,(2SC3358)			
Q 5	IC,(μPA102G)			
Q 6	Di,(ND587T-3B)			
Q 7	Tr,(2SC3358)			
Q 8	Di,(1S953)			
Q 9	IC,(μPA102G)			
Q10	IC,(μPC271C)			
Q11	Tr,(2SC3358)			
Q12	Tr,(2SC3358)			
Q13	Di,(1S953)			
Q14	IC,(μPA101G)			
Q15	Tr,(2SC2718)			
Q16	IC,(μPB581C)			
Q17	Tr,(2SA1151)			
Q18	Di,(1S953)			
Q19	Tr,(2SC2718)			
Q20	IC,(μPA102G)			
Q21	Tr,(2SC3358)			
Q22	Tr,(2SC2718)			
Q23	Tr,(2SA1151)			
Q24	IC,(μPC251C)			
Q25	Di,(1S953)			
Q26	Di,(1S953)			
Q27	Tr,(2SC2901)			
Q28	Di,(1S953)			
Q29	IC,(MC10H102L)			
Q30	Tr,(2SC3358)			
Q31	IC,(MC10H131L)			
Q32	IC,(MC10H131L)			
Q33	Di,breakdown,(RD5.1EB)	4.8 to 5.4V,400mW		
Q34	Tr,(2SC2718)			
Q35	IC,(MC10H116L)			
Q36	IC,(MC10H131L)			
Q37	Tr,(2SC3358)			
Q38	Tr,(2SC3358)			
Q39	Tr,(2SC3358)			
Q40	Di,(1SS99)			
Q41	Di,(1SS99)			
Q42	IC,(μPC271C)			
Q43 to Q62	Di,(1SV164)			

( ): Manufacturer's part number
* : Selected at factory

Parts List : R-Z1 INPUT 31

CKT REF	DESCRIPTION	RATING	NOTE
Q63	Tr,(2SC3358)		
Q64	Tr,(2SC3358)		
Q65	Tr,(2SC3358)		
Q66	Di,(1S953)		
Q67	Tr,(2SA1151)		
Q68	IC,(μPA104G)		
Q69	Di,(1S953)		
Q70	IC,(μPA104G)		
Q71	Di,(1S953)		
Q72	Tr,(2SC3604)		
Q73	Di,(ND587T-3B)		
Q74	Di,(1S953)		
Q75	IC,(μPA102G)		
Q76	Di,(1S953)		
Q77	Di,breakdown, (RD2.7EB(3))	2.7V±3%,400mW	
Q78	Di,breakdown, (RD2.7EB(3))	2.7V±3%,400mW	
Q79	IC,(μPA102G)		
Q80	Di,(1S953)		
Q81	Di,breakdown, (RD2.7EB(3))	2.7V±3%,400mW	
Q82	Di,breakdown, (RD2.7EB(3))	2.7V±3%,400mW	
Q83	IC,(μPA102G)		
Q84	Tr,(2SC3358)		
Q85	Di,(1S953)		
Q86	IC,(μPA101G)		
Q87	Tr,(2SC3358)		
Q88	Tr,(2SC3358)		
Q89	IC,(μPA104G)		
Q90	Tr,(2SC3358)		
Q91	IC,(μPA104G)		
Q92	Di,(1S953)		
Q93	Tr,(2SC3358)		
Q94	IC,(μPA104G)		
Q95	Di,(1S953)		
Q96	Di,(1S953)		
Q97	Tr,(2SC2718)		
Q98	Tr,(2SC2718)		
Q99	Di,(1S953)		
Q100	Di,(1S953)		
Q101	Di,(1S953)		
Q102	Tr,(2SA1154)		

( ): Manufacturer's part number
* : Selected at factory

44W83033 | 5/14

Parts List : R-Z1 INPUT 31

CKT REF	DESCRIPTION	RATING	NOTE
Q103	Di,(1S953)		
Q104	Di,(1S953)		
Q105	IC,(TD62003P)		
Q106	IC,(74LS27)		
Q107	IC,(74LS00)		
Q108	IC,(HD10124)		
Q109	IC,(74LS138)		
Q110	IC,(74LS273)		
Q111	Di,(1S953)		
Q112	Di,breakdown,(1SZ52)	5.9 to 6.5V,250mW	
Q113	IC,(μPC251C)		
Q114	IC,(HA17008RP)		
Q115	IC,(74LS273)		
Q116	IC,(μPC251C)		
Q117	IC,(HA17008RP)		
Q118	IC,(74LS273)		
Q119	Di,(1S953)		
Q120	Tr,(2SC2718)		
Q121	Di,(ND587T-3B)		
Q122	Tr,(2SC3584)		
Q123	Tr,(2SC3584)		
Q124	Tr,(2SC3584)		
Q125	Tr,(2SC3584)		
Q126	Tr,(2SA1151)		
R 1	MF,(NRTF1/2C 75Ω J)	75Ω,±5%,1/2W	
R 2	CF,(ARD25T332J)	3.3kΩ,±5%,1/4W	
R 3	Var,MF,(RJ-6P 5kΩ)	5kΩ,1/2W	
R 4	CF,(ARD25T332J)	3.3kΩ,±5%,1/4W	
R 5	CF,(ERD10TJ * A)	10 to 100Ω,±5%,1/8W	Q'ty 0 to 3, *
R 6	MF,(NRTF1/2C 680ΩJ)	680Ω,±5%,1/2W	
R 7	MF,(NRTF1/2C 680ΩJ)	680Ω,±5%,1/2W	
R 8	CF,(ARD25T151J)	150Ω,±5%,1/4W	
R 9	CF,(ERD10TJ * A)	10 to 100Ω,±5%,1/8W	Q'ty 0 to 3, *
R 10	Var,MF,(RJ-6P 2kΩ)	2kΩ,1/2W	
R 11	CF,(ERD10TJ221A)	220Ω,±5%,1/8W	
R 12	CF,(ERD10TJ151A)	150Ω,±5%,1/8W	
R 13	CF,(ERD10TJ * A)	10 to 100Ω,±5%,1/8W	Q'ty 0 to 3, *
R 14	CF,(ERD10TJ221A)	220Ω,±5%,1/8W	
R 15	CF,(ERD10TJ * A)	10 to 100Ω,±5%,1/8W	Q'ty 0 to 3, *

( ): Manufacturer's part number
* : Selected at factory

44W83033 | 6/14

Parts List : R-Z1 INPUT 31

CKT REF	DESCRIPTION	RATING	NOTE
R16	MF,(NRTF1/2C 680ΩJ)	680Ω,±5%,1/2W	
R17	MF,(NRTF1/2C 680ΩJ)	680Ω,±5%,1/2W	
R18	CF,(ERD10TJ510A)	51Ω,±5%,1/8W	
R19	CF,(ERD10TJ510A)	51Ω,±5%,1/8W	
R20	CF,(ERD10TJ * A)	10 to 100Ω,±5%,1/8W	Q'ty 0 to 3, *
R21	CF,(ARD25T102J)	1kΩ,±5%,1/4W	
R22	CF,(ERD10TJ750J)	75Ω,±5%,1/8W	
R23	CF,(ERD10TJ151A)	150Ω,±5%,1/8W	
R24	CF,(ERD10TJ * A)	10 to 100Ω,±5%,1/8W	Q'ty 0 to 3, *
R25	CF,(ERD10TJ391A)	390Ω,±5%,1/8W	
R26	Not assigned		
R27	CF,(ARD25T222J)	2.2kΩ,±5%,1/4W	
R28	CF,(ARD25T222J)	2.2kΩ,±5%,1/4W	
R29	CF,(ARD25T103J)	10kΩ,±5%,1/4W	
R30	Var,MF,(RJ-6P 1kΩ)	1kΩ,1/2W	
R31	CF,(ARD25T392J)	3.9kΩ,±5%,1/4W	
R32	CF,(ERD10TJ * A)	10 to 100Ω,±5%,1/8W	Q'ty 0 to 3, *
R33	CF,(ERD10TJ510A)	51Ω,±5%,1/8W	
R34	CF,(ERD10TJ * A)	10 to 100Ω,±5%,1/8W	Q'ty 0 to 3, *
R35	CF,(ERD10TJ * A)	10 to 100Ω,±5%,1/8W	Q'ty 0 to 3, *
R36	CF,(ERD10TJ510A)	51Ω,±5%,1/8W	
R37	CF,(ARD25T152J)	1.5kΩ,±5%,1/4W	
R38	CF,(ARD25T102J)	1kΩ,±5%,1/4W	
R39	CF,(ARD25T121J)	120Ω,±5%,1/4W	
R40	CF,(ERD10TJ151A)	150Ω,±5%,1/8W	
R41	CF,(ERD10TJ101A)	100Ω,±5%,1/8W	
R42	CF,(ERD10TJ391A)	390Ω,±5%,1/8W	
R43	CF,(ERD10TJ * A)	10 to 100Ω,±5%,1/8W	Q'ty 0 to 3, *
R44	CF,(ERD10TJ510A)	51Ω,±5%,1/8W	
R45	CF,(ERD10TJ391A)	390Ω,±5%,1/8W	
R46	CF,(ARD25T681J)	680Ω,±5%,1/4W	
R47	CF,(ARD25T221J)	220Ω,±5%,1/4W	
R48	CF,(ERD10TJ151A)	150Ω,±5%,1/8W	
R49	CF,(ERD10TJ510A)	51Ω,±5%,1/8W	
R50	CF,(ERD10TJ510A)	51Ω,±5%,1/8W	
R51	Not assigned		
R52	CF,(ARD25T471J)	470Ω,±5%,1/4W	
R53	CF,(ARD25T472J)	4.7kΩ,±5%,1/4W	
R54	CF,(ARD25T121J)	120Ω,±5%,1/4W	
R55	CF,(ARD25T221J)	220Ω,±5%,1/4W	

( ): Manufacturer's part number
* : Selected at factory

44W83033 | 7/14

Parts List : R-Z1 INPUT 31

CKT REF	DESCRIPTION	RATING	NOTE
R56	CF,(ERD10TJ750A)	75Ω,±5%,1/8W	
R57	CF,(ARD25T681J)	680Ω,±5%,1/4W	
R58	CF,(ERD10TJ221A)	220Ω,±5%,1/8W	
R59	CF,(ERD10TJ * A)	10 to 100Ω,±5%,1/8W	Q'ty 0 to 3, *
R60	CF,(ERD10TJ * A)	10 to 100Ω,±5%,1/8W	Q'ty 0 to 3, *
R61	CF,(ERD10TJ221A)	220Ω,±5%,1/8W	
R62	CF,(ERD10TJ101A)	100Ω,±5%,1/8W	
R63	CF,(ARD25T392J)	3.9kΩ,±5%,1/4W	
R64	CF,(ARD25T102J)	1kΩ,±5%,1/4W	
R65	CF,(ERD10TJ510A)	51Ω,±5%,1/8W	
R66	CF,(ERD10TJ510A)	51Ω,±5%,1/8W	
R67	CF,(ERD10TJ * A)	10 to 100Ω,±5%,1/8W	Q'ty 0 to 3, *
R68	CF,(ERD10TJ391A)	390Ω,±5%,1/8W	
R69	CF,(ERD10TJ220A)	22Ω,±5%,1/8W	
R70	CF,(ARD25T102J)	1kΩ,±5%,/4W	
R71	CF,(ARD25T102J)	1kΩ,±5%,1/4W	
R72	Var,MF,(RJ-6P 2kΩ)	2kΩ,1/2W	
R73	CF,(ARD25T103J)	10kΩ,±5%,1/4W	
R74	CF,(ARD25T103J)	10kΩ,±5%,1/4W	
R75	CF,(ARD25T103J)	10kΩ,±5%,1/4W	
R76	CF,(ARD25T562J)	5.6kΩ,±5%,1/4W	
R77	Var,MF,(RJ-6P 1kΩ)	1kΩ,1/2W	
R78	CF,(ARD25T102J)	1kΩ,±5%,1/4W	
R79	CF,(ARD25T102J)	1kΩ,±5%,1/4W	
R80	Var,MF,(RJ-6P 1kΩ)	1kΩ,1/2W	
R81	CF,(ARD25T102J)	1kΩ,±5%,1/4W	
R82	CF,(ARD25T102J)	1kΩ,±5%,1/4W	
R83	CF,(ERD10TJ391A)	390Ω,±5%,1/8W	
R84	CF,(ARD25T131J)	130Ω,±5%,1/4W	
R85	CF,(ERD10TJ820A)	82Ω,±5%,1/8W	
R86	CF,(ARD25T131J)	130Ω,±5%,1/4W	
R87	CF,(ERD10TJ391A)	390Ω,±5%,1/8W	
R88	CF,(ARD25T131J)	130Ω,±5%,1/4W	
R89	CF,(ERD10TJ510A)	51Ω,±5%,1/8W	
R90	CF,(ERD10TJ101A)	100Ω,±5%,1/8W	
R91	CF,(ERD10TJ820J)	82Ω,±5%,1/8W	
R92	CF,(ARD25T681J)	680Ω,±5%,1/4W	
R93	CF,(ERD10TJ121A)	120Ω,±5%,1/8W	
R94	CF,(ARD25T181J)	180Ω,±5%,1/4W	
R95	CF,(ERD10TJ391A)	390Ω,±5%,1/8W	
R96	Var,MF,(RJ-6P 1kΩ)	1kΩ,1/2W	

( ): Manufacturer's part number
* : Selected at factory

44W83033 | 8/14

Parts List : R-Z1 INPUT 31

CKT REF	DESCRIPTION	RATING		NOTE
R97	CF,(ERD10TJ391A)	390Ω,±5%,1/8W		
R98	CF,(ERD10TJ391A)	390Ω,±5%,1/8W		
R99	CF,(ARD25T181J)	180Ω,±5%,1/4W		
R100	CF,(ERD10TJ121A)	120Ω,±5%,1/8W		
R101	CF,(ERD10TJ391A)	390Ω,±5%,1/8W		
R102	CF,(ERD10TJ332A)	3.3kΩ,±5%,1/8W		
R103	CF,(ARD25T471J)	470Ω,±5%,1/4W		
R104	CF,(ARD25T221J)	220Ω,±5%,1/4W		
R105	CF,(ARD25T332J)	3.3kΩ,±5%,1/4W		
R106	CF,(ARD25T682J)	6.8kΩ,±5%,1/4W		
R107	CF,(ARD25T101J)	100Ω,±5%,1/4W		
R108	CF,(ARD25T471J)	470Ω,±5%,1/4W		
R109	CF,(ARD25T221J)	220Ω,±5%,1/4W		
R110	CF,(ARD25T223J)	22kΩ,±5%,1/4W		
R111	CF,(ARD25T333J)	33kΩ,±5%,1/4W		
R112	CF,(ERD10TJ152A)	1.5kΩ,±5%,1/8W		
R113	CF,(ERD10TJ681A)	680Ω,±5%,1/8W		
R114	CF,(ERD10TJ820A)	82Ω,±5%,1/8W		
R115	CF,(ARD25T131J)	130Ω,±5%,1/4W		
R116	CF,(ARD25T181J)	180Ω,±5%,1/4W		
R117	CF,(ERD10TJ121A)	120Ω,±5%,1/4W		
R118	CF,(ERD10TJ681A)	680Ω,±5%,1/4W		
R119	CF,(ERD10TJ391A)	390Ω,±5%,1/8W		
R120	CF,(ARD25T * J)	10 to 220Ω,±5%,1/4W		Q'ty 1 to 3, *
R121	CF,(ARD25T102J)	1kΩ,±5%,1/4W		
R122	CF,(ARD25T102J)	1kΩ,±5%,1/4W		
R123	CF,(ARD25T222J)	2.2kΩ,±5%,1/4W		
R124	Var,MF,(RJ-6P 1kΩ)	1kΩ,1/2W		
R125	CF,(ARD25T152J)	1.5kΩ,±5%,1/4W		
R126	CF,(ARD25T103J)	10kΩ,±5%,1/4W		
R127	CF,(ARD25T102J)	1kΩ,±5%,1/4W		
R128	CF,(ERD10TJ103A)	10kΩ,±5%,1/8W		
R129	CF,(ERD10TJ510A)	51Ω,±5%,1/8W		
R130	CF,(ERD10TJ510A)	51Ω,±5%,1/8W		
R131	CF,(ERD10TJ391A)	390Ω,±5%,1/8W		
R132	CF,(ERD10TJ472A)	4.7kΩ,±5%,1/8W		
R133	CF,(ERD10TJ * A)	10 to 51Ω,±5%,1/8W		Q'ty 1 to 3, *
R134	CF,(ERD10TJ562A)	5.6kΩ,±5%,1/8W		
R135	CF,(ERD10TJ330A)	33Ω,±5%,1/8W		
R136	CF,(ERD10TJ151A)	150Ω,±5%,1/8W		
R137	CF,(ERD10TJ * A)	100 to 330Ω,±5%,1/8W		Q'ty 1 to 3, *

( ): Manufacturer's part number
* : Selected at factory

Parts List : R-Z1 INPUT 31

CKT REF	DESCRIPTION	RATING		NOTE
R138	CF,(ERD10TJ101A)	100Ω,±5%,1/8W		
R139	CF,(ERD10TJ510A)	51Ω,±5%,1/8W		
R140	CF,(ARD25T221J)	220Ω,±5%,1/4W		
R141	CF,(ARD25T222J)	2.2kΩ,±5%,1/4W		
R142	CF,(ARD25T332J)	3.3kΩ,±5%,1/4W		
R143	Var,MF,(RJ-6P 1kΩ)	1kΩ,1/2W		
R144	CF,(ERD10TJ391A)	390Ω,±5%,1/8W		
R145	CF,(ERD10TJ820A)	82Ω,±5%,1/8W		
R146	CF,(ERD10TJ * A)	10 to 100Ω,±5%,1/8W		Q'ty 0 to 3, *
R147	CF,(ERD10TJ510A)	51Ω,±5%,1/8W		
R148	CF,(ERD10TJ510A)	51Ω,±5%,1/8W		
R149	CF,(ERD10TJ * A)	10 to 100Ω,±5%,1/8W		Q'ty 0 to 3, *
R150	CF,(ERD10TJ510A)	51Ω,±5%,1/8W		
R151	CF,(ERD10TJ101A)	100Ω,±5%,1/8W		
R152	CF,(ERD10TJ510A)	51Ω,±5%,1/8W		
R153	CF,(ARD25T681J)	680Ω,±5%,1/4W		
R154	CF,(ERD10TJ391A)	390Ω,±5%,1/8W		
R155	CF,(ERD10TJ820A)	82Ω,±5%,1/8W		
R156	CF,(ARD25T131J)	130Ω,±5%,1/4W		
R157	CF,(ERD10TJ * A)	10 to 100Ω,±5%,1/8W		Q'ty 0 to 3, *
R158	CF,(ERD10TJ510A)	51Ω,±5%,1/8W		
R159	Var,MF,(RJ-6P 1kΩ)	1kΩ,1/2W		
R160	CF,(ERD10TJ * A)	10 to 100Ω,±5%,1/8W		Q'ty 0 to 3, *
R161	CF,(ERD10TJ820A)	82Ω,±5%,1/8W		
R162	CF,(ERD10TJ101A)	100Ω,±5%,1/8W		
R163	CF,(ERD10TJ510A)	51Ω,±5%,1/8W		
R164	CF,(ARD25T392J)	3.9kΩ,±5%,1/4W		
R165	CF,(ARD25T392J)	3.9kΩ,±5%,1/4W		
R166	CF,(ERD10TJ151A)	150Ω,±5%,1/8W		
R167	MF,(NRTF1/2C 75ΩJ)	75Ω,±5%,1/2W		
R168	CF,(ERD10TJ * A)	10 to 100Ω,±5%,1/8W		Q'ty 0 to 3, *
R169	CF,(ARD25T122J)	1.2kΩ,±5%,1/4W		
R170	Var,MF,(RJ-6P 5kΩ)	5kΩ,1/2W		
R171	CF,(ERD10TJ330A)	33Ω,±5%,1/8W		
R172	MF,(NRTF1/4C 1kΩJ)	1kΩ,±5%,1/4W		
R173	CF,(ERD10TJ * A)	10 to 100Ω,±5%,1/8W		Q'ty 0 to 3, *
R174	CF,(ARD25T181A)	180Ω,±5%,1/4W		
R175	CF,(ERD10TJ101A)	100Ω,±5%,1/8W		

( ): Manufacturer's part number
* : Selected at factory

Parts List : R-Z1 INPUT 31

CKT REF	DESCRIPTION	RATING		NOTE
R176	CF,(ERD10TJ * A)	10 to 100Ω,±5%,1/8W		Q'ty 0 to 3, *
R177	CF,(ARD25T332J)	3.3k.,±5%,1/4W		
R178	Var,MF,(RJ-6P 5kΩ)	5kΩ,1/2W		
R179	CF,(ERD10TJ510A)	51Ω,±5%,1/8W		
R180	CF,(ERD10TJ510A)	51Ω,±5%,1/8W		
R181	CF,(ERD10TJ * A)	10 to 100Ω,±5%,1/8W		Q'ty 0 to 3, *
R182	CF,(ERD10TJ * A)	10 to 100Ω,±5%,1/8W		Q'ty 0 to 3, *
R183	CF,(ARD25T221J)	220Ω,±5%,1/4W		
R184	CF,(ERD10TJ * A)	10 to 100Ω,±5%,1/8W		Q'ty 0 to 3, *
R185	CF,(ERD10TJ101A)	100Ω,±5%,1/8W		
R186	CF,(ERD10TJ * A)	10 to 100Ω,±5%,1/8W		Q'ty 0 to 3, *
R187	MF,(RN14K2H681J)	680Ω,±5%,1/2W		
R188	CF,(ARD25T332J)	3.3kΩ,±5%,1/4W		
R189	Var,MF,(RJ-6P 5kΩ)	5kΩ,1/2W		
R190	CF,(ERD10TJ510A)	51Ω,±5%,1/8W		
R191	CF,(ERD10TJ510A)	51Ω,±5%,1/8W		
R192	CF,(ERD10TJ * A)	10 to 100Ω,±5%,1/8W		Q'ty 0 to 3, *
R193	CF,(ERD10TJ * A)	10 to 100Ω,±5%,1/8W		Q'ty 0 to 3, *
R194	CF,(ARD25T681J)	680Ω,±5%,1/4W		
R195	CF,(ARD25T221J)	220Ω,±5%,1/4W		
R196	Not assigned			
R197	Not assigned			
R198	Not assigned			
R199	Not assigned			
R200	CF,(ERD10TJ * A)	10 to 100Ω,±5%,1/8W		Q'ty 0 to 3, *
R201	CF,(ERD10TJ101A)	100Ω,±5%,1/8W		
R202	CF,(ERD10TJ * A)	10 to 100Ω,±5%,1/8W		Q'ty 0 to 3, *
R203	CF,(ARD25T681J)	680Ω,±5%,1/4W		
R204	CF,(ERD10TJ101A)	100Ω,±5%,1/8W		
R205	CF,(ERD10TJ101A)	100Ω,±5%,1/8W		
R206	CF,(ERD10TJ101A)	100Ω,±5%,1/8W		
R207	CF,(ERD10TJ510A)	51Ω,±5%,1/8W		
R208	CF,(ERD10TJ510A)	51Ω,±5%,1/8W		
R209	CF,(ARD25T332J)	3.3kΩ,±5%,1/4W		
R210	CF,(ERD10TJ * A)	10 to 100Ω,±5%,1/8W		Q'ty 0 to 3, *

( ): Manufacturer's part number
* : Selected at factory

Parts List : R-Z1 INPUT 31

CKT REF	DESCRIPTION	RATING		NOTE
R211	CF,(ERD10TJ * A)	10 to 100Ω,±5%,1/8W		Q'ty 0 to 3, *
R212	CF,(ERD10TJ391A)	390Ω,±5%,1/8W		
R213	Var,MF,(RJ-6P 1kΩ)	1kΩ,1/2W		
R214	CF,(ERD10TJ510A)	51Ω,±5%,1/8W		
R215	CF,(ERD10TJ * A)	10 to 100Ω,±5%,1/8W		Q'ty 0 to 3, *
R216	CF,(ARD25T391A)	390Ω,±5%,1/4W		
R217	CF,(ERD10TJ * A)	10 to 100Ω,±5%,1/8W		Q'ty 0 to 3, *
R218	CF,(ERD10TJ510A)	51Ω,±5%,1/8W		
R219	CF,(ERD10TJ510A)	51Ω,±5%,1/8W		
R220	CF,(ARD25T332J)	3.3kΩ,±5%,1/4W		
R221	CF,(ERD10TJ510A)	51Ω,±5%,1/8W		
R222	CF,(ERD10TJ * A)	10 to 100Ω,±5%,1/8W		Q'ty 0 to 3, *
R223	CF,(ERD10TJ510A)	51Ω,±5%,1/8W		
R224	CF,(ARD25T391J)	390Ω,±5%,1/4W		
R225	CF,(ERD10TJ * A)	10 to 100Ω,±5%,1/8W		Q'ty 0 to 3, *
R226	CF,(ERD10TJ * A)	10 to 100Ω,±5%,1/8W		Q'ty 0 to 3, *
R227	CF,(ERD10TJ391A)	390Ω,±5%,1/8W		
R228	CF,(ERD10TJ101A)	100Ω,±5%,1/8W		
R229	CF,(ERD10TJ820J)	82Ω,±5%,1/8W		
R230	CF,(ERD10TJ510A)	51Ω,±5%,1/8W		
R231	CF,(ARD25T681J)	680Ω,±5%,1/4W		
R232	CF,(ERD10TJ * A)	10 to 100Ω,±5%,1/8W		Q'ty 0 to 3, *
R233	CF,(ERD10TJ391A)	390Ω,±5%,1/8W		
R234	CF,(ERD10TJ * A)	10 to 100Ω,±5%,1/8W		Q'ty 0 to 3, *
R235	CF,(ERD10TJ820A)	82Ω,±5%,1/8W		
R236	CF,(ERD10TJ510A)	51Ω,±5%,1/8W		
R237	CF,(ERD10TJ510A)	51Ω,±5%,1/8W		
R238	CF,(ERD10TJ820A)	82Ω,±5%,1/8W		
R239	CF,(ERD10TJ101A)	100Ω,±5%,1/8W		
R240	CF,(ARD25T131J)	130Ω,±5%,1/4W		
R241	CF,(ERD10TJ101A)	100Ω,±5%,1/8W		
R242	CF,(ERD10TJ820A)	82Ω,±5%,1/8W		
R243	CF,(ERD10TJ * A)	10 to 100Ω,±5%,1/8W		Q'ty 0 to 3, *
R244	CF,(ARD25T102J)	1kΩ,±5%,1/4W		
R245	CF,(ARD25T222J)	2.2kΩ,±5%,1/4W		
R246	CF,(ARD25T332J)	3.3kΩ,±5%,1/4W		

( ): Manufacturer's part number
* : Selected at factory

Parts List : R-Z1 INPUT 31

CKT REF	DESCRIPTION	RATING		NOTE
R247	Var,MF,(RJ-6P 1kΩ)	1kΩ,1/2W		
R248	CF,(ARD25T332J)	3.3kΩ,±5%,1/4W		
R249	CF,(ERD10TJ510A)	51Ω,±5%,1/8W		
R250	CF,(ERD10TJ510A)	51Ω,±5%,1/8W		
R251	CF,(ERD10TJ101A)	100Ω,±5%,1/8W		
R252	Var,MF,(RJ-6P 1kΩ)	1kΩ,1/2W		
R253	CF,(ARD25T332J)	3.3kΩ,±5%,1/4W		
R254	CF,(ARD25T681J)	680Ω,±5%,1/4W		
R255	CF,(ARD25T121J)	120Ω,±5%,1/4W		
R256	CF,(ARD25T121J)	120Ω,±5%,1/4W		
R257	CF,(ARD25T681J)	680Ω,±5%,1/4W		
R258	CF,(ARD25T221J)	220Ω,±5%,1/4W		
R259	CF,(ARD25T221J)	220Ω,±5%,1/4W		
R260	CF,(ERD10TJ * A)	10 to 100Ω,±5%,1/8W		Q'ty 0 to 3, *
R261	Var,MF,(RJ-6P 1kΩ)	1kΩ,1/2W		
R262	CF,(ARD25T152J)	1.5kΩ,±5%,1/4W		
R263	Var,MF,(RJ-6P 100kΩ)	100kΩ,1/2W		
R264	Var,MF,(RJ-6P 50kΩ)	50kΩ,1/2W		
R265	Var,MF,(RJ-6P 2kΩ)	2kΩ,1/2W		
R266	CF,(ARD25T102J)	1kΩ,±5%,1/4W		
R267	Var,MF,(RJ-6P 1kΩ)	1kΩ,1/2W		
R268	MF,(RN14K2E1501D)	1.50kΩ,±0.5%,1/4W		
R269	MF,(RN14K2E3241D)	3.24kΩ,±0.5%,1/4W		
R270	MF,(RN14K2E1002D)	10.0kΩ,±0.5%,1/4W		
R271	MF,(RN14K2E1002D)	10.0kΩ,±0.5%,1/4W		
R272	MF,(RN14K2E1501D)	1.50kΩ,±0.5%,1/4W		
R273	MF,(RN14K2E4991D)	4.99kΩ,±0.5%,1/4W		
R274	Var,MF,(RJ-6P 1kΩ)	1kΩ,1/2W		
R275	MF,(RN14K2E4991D)	4.99kΩ,±0.5%,1/4W		
R276	MF,(RN14K2E1002D)	10.0kΩ,±0.5%,1/4W		
R277	Var,MF,(RJ-6P 1kΩ)	[illegible]		
R278	MF,(RN14K2E1001D)	[illegible]		
R279	CF,(ARD25T152J)	[illegible]		
R280	MF,(RN14K2E1001D)	1.00kΩ,±0.[illegible]		
R281	CF,(ARD25T152J)	1.5kΩ,±5%,1/4W		
R282	CF,(ARD25T332J)	3.3kΩ,±5%,1/4W		
R283	Var,MF,(RJ-6P 50kΩ)	[illegible]		
R284	MF,(RN14K2H681J)	[illegible]		
R285	CF,(ARD25T102J)	[illegible]		
R286	Var,MF,(RJ-6P 1kΩ)	[illegible]		
R287	CF,(ARD25T511J)	510Ω,±5%,1/4W		
R288	CF,(ERD10TJ820A)	82Ω,±5%,1/8W		

( ): Manufacturer's part number
* : Selected at factory

44W83033 13/14

Parts List : R-Z1 INPUT 31

CKT REF	DESCRIPTION	RATING		NOTE
Z 1	Delay line, (1L4-F41 1.5±2.5NS)	1.5±2.5ns		* 1.8ns
Z 2	Delay line, (1L4-F41 1.8NS)	1.8ns		
Z 3	Delay line, (1L4-F41 1.4±2.5NS)	1.4±2.5ns		* 1.4ns
Z 4	Delay line, (1L4-F41 1.4±2.5NS)	1.4±2.5ns		* 2.3ns
Z 5	Delay line, (1L4-F41 2.5NS)	2.5ns		

( ): Manufacturer's part number
* : Selected at factory

44W83033 14/14

Parts List : R-Z4 ERROR DETECTOR 32

CKT REF	DESCRIPTION	RATING		NOTE
C 1	Elect,(CE04C1A470)	47μF,±20%,10V		
C 2	Elect,(CE04C1A470)	47μF,±20%,10V		
C 3	Elect,(CE04C1A470)	47μF,±20%,10V		
C 4	Cer,(CC924CH1H221J)	220pF,±5%,50V		
C 5	Cer,(CC924CH1H221J)	220pF,±5%,50V		
C 6	Cer,(CC924CH1H221J)	220pF,±5%,50V		
C 7	Cer,(CC45CH1H100DY)	10pF,±0.5pF,50V		Q'ty 0 or 1
C 8	Cer,(CC45CH1H100DY)	10pF,±0.5pF,50V		Q'ty 0 or 1
C 9	Cer,(CK45D1H103MY)	0.01μF,±20%,50V		
C10	Cer,(CK45B1H102KY)	1000pF,±10%,50V		
C11	Cer,(CC45CH1H100DY)	10pF,±0.5pF,50V		Q'ty 0 or 1
C12	Elect,(CE04C1C330)	33μF,±20%,16V		
C13	Elect,(CE04C1J2R2)	2.2μF,±20%,63V		
C14	Elect,(CE04C1J2R2)	2.2μF,±20%,63V		
C15	Cer,(CC924CH1H680J)	68pF,±5%,50V		
C16 to C28	Cer,(CK924F1H104Z)	0.1μF,+80/-20%,50V		
C29	Not assigned			
C30 to C71	Cer,(CK924F1H104Z)	0.1μF,+80/-20%,50V		
J 1	Pattern			
J 2	Receptacle, (27DP-R-PC-1)			
J 3	Receptacle, (27DP-R-PC-1)			
Q 1	IC,(74LS04)			
Q 2	IC,(74LS00)			
Q 3	IC,(μPD8253C-2)			
Q 4	IC,(74LS273)			
Q 5	IC,(74LS273)			
Q 6	IC,(74LS240)			
Q 7	IC,(74LS244)			
Q 8	IC,(74LS74A)			
Q 9	IC,(74LS00)			
Q10	IC,(74LS123)			

( ): Manufacturer's part number
* : Selected at factory

44W83036 1/7

Parts List : R-Z4 ERROR DETECTOR 32

CKT REF	DESCRIPTION	RATING		NOTE
Q11	IC,(74LS02)			
Q12	IC,(74LS393)			
Q13	IC,(74LS390)			
Q14	IC,(74LS04)			
Q15	IC,(74LS240)			
Q16	IC,(74LS123)			
Q17	IC,(74LS123)			
Q18	IC,(74LS123)			
Q19	IC,(74LS138)			
Q20	IC,(HD10124)			
Q21	IC,(HD10124)			
Q22	IC,(MC10H131L)			
Q23	IC,(HD10131)			
Q24	IC,(HD10131)			
Q25	IC,(MC10H131L)			
Q26	IC,(HD10125)			
Q27	IC,(HD100102)			
Q28	IC,(F100131)			
Q29	IC,(F100131)			
Q30	IC,(HD10131)			
Q31	IC,(HD10102)			
Q32	IC,(HD10102)			
Q33	IC,(MC10H131L)			
Q34	IC,(F100107)			
Q35	IC,(HM10422-7)			
Q36	IC,(HM10422-7)			
Q37	IC,(F100155)			
Q38	IC,(F100141)			
Q39	IC,(F100107)			
Q40	IC,(μPA102G)			
Q41	IC,(11C06)			
Q42	IC,(11C06)			
Q43	IC,(SP9131)			
Q44	IC,(HD100102)			
Q45	IC,(F100136)			
Q46	IC,(F100136)			
Q47	IC,(ANE101GC01)			
Q48	IC,(F100131)			
Q49	IC,(HD100102)			
Q50	Tr,(2SC3358)			
Q51	Tr,(2SC3358)			
Q52	Tr,(2SC3358)			
Q53	Di,(1S953)			
Q54	Di,(1S953)			
Q55	Di,(1S953)			

( ): Manufacturer's part number
* : Selected at factory

44W83036 2/7

Parts List : R-Z4 ERROR DETECTOR 32

CKT REF	DESCRIPTION	RATING		NOTE
Q56	Tr,(2SC3358)			
Q57	Tr,(2SC3358)			
Q58	Tr,(2SC3358)			
Q59	Tr,(2SC3358)			
Q60	IC,(μPA102G)			
R 1	CF,(ARD25T102J)	1kΩ,±5%,1/4W		
R 2	CF,(ARD25T102J)	1kΩ,±5%,1/4W		
R 3	CF,(ARD25T102J)	1kΩ,±5%,1/4W		
R 4	CF,(ARD25T103J)	10kΩ,±5%,1/4W		
R 5	CF,(ARD25T103J)	10kΩ,±5%,1/4W		
R 6	CF,(ARD25T473J)	47kΩ,±5%,1/4W		
R 7	CF,(ARD25T153J)	15kΩ,±5%,1/4W		
R 8	CF,(ARD25T103J)	10kΩ,±5%,1/4W		
R 9	CF,(ARD25T683J)	68kΩ,±5%,1/4W		
R10	CF,(ARD25T154J)	150kΩ,±5%,1/4W		
R11	CF,(ARD25T154J)	150kΩ,±5%,1/4W		
R12	Single in-line array, (IHR-8-182JA)	1.8kΩ x 8,1/8W		
R13	Single in-line array, (IHR-4-472JB)	4.7kΩ x 4,1/8W		
R14	Single in-line array, (IHR-8-562JA)	5.6kΩ x 8,1/8W		
R15	Single in-line array, (IHR-8-182JA)	1.8kΩ x 8,1/8W		
R16	Single in-line array, (IHR-4-472JB)	4.7kΩ x 4,1/8W		
R17	Single in-line array, (IHR-8-562JA)	5.6kΩ x 8,1/8W		
R18	Single in-line array, (IHR-8-182JA)	1.8kΩ x 8,1/8W		
R19	Single in-line array, (IHR-4-472JB)	4.7kΩ x 4,1/8W		
R20	Single in-line array, (IHR-8-562JA)	5.6kΩ x 8,1/8W		
R21	CF,(ERD10TJ471A)	470Ω,±5%,1/8W		
R22	CF,(ARD25T131J)	130Ω,±5%,1/4W		
R23	CF,(ERD10TJ820A)	82Ω,±5%,1/8W		
R24	CF,(ERD10TJ471A)	470Ω,±5%,1/8W		
R25	CF,(ERD10TJ271A)	270Ω,±5%,1/8W		
R26	CF,(ERD10TJ181A)	180Ω,±5%,1/8W		
R27	CF,(ERD10TJ471A)	470Ω,±5%,1/8W		
R28	CF,(ERD10TJ471A)	470Ω,±5%,1/8W		
R29	CF,(ERD10TJ181A)	180Ω,±5%,1/8W		
R30	CF,(ERD10TJ271A)	270Ω,±5%,1/8W		

( ): Manufacturer's part number
* : Selected at factory

Parts List : R-Z4 ERROR DETECTOR 32

CKT REF	DESCRIPTION	RATING		NOTE
R31	CF,(ERD10TJ471A)	470Ω,±5%,1/8W		
R32	CF,(ERD10TJ181A)	180Ω,±5%,1/8W		
R33	CF,(ARD25T271J)	270Ω,±5%,1/4W		
R34	CF,(ERD10TJ471A)	470Ω,±5%,1/8W		
R35	CF,(ERD10TJ471A)	470Ω,±5%,1/8W		
R36	CF,(ERD10TJ102A)	1kΩ,±5%,1/8W		
R37	CF,(ERD10TJ471A)	470Ω,±5%,1/8W		
R38	CF,(ERD10TJ471A)	470Ω,±5%,1/8W		
R39	CF,(ERD10TJ471A)	470Ω,±5%,1/8W		
R40	CF,(ERD10TJ221A)	220Ω,±5%,1/8W		
R41	CF,(ERD10TJ181A)	180Ω,±5%,1/8W		
R42	CF,(ERD10TJ101A)	100Ω,±5%,1/8W		
R43	CF,(ARD25T121J)	120Ω,±5%,1/4W		
R44	CF,(ERD10TJ101A)	100Ω,±5%,1/8W		
R45	CF,(ARD25T121A)	120Ω,±5%,1/4W		
R46	CF,(ERD10TJ181A)	180Ω,±5%,1/8W		
R47	CF,(ERD10TJ221A)	220Ω,±5%,1/8W		
R48	CF,(ARD25T121J)	120Ω,±5%,1/4W		
R49	CF,(ERD10TJ101A)	100Ω,±5%,1/8W		
R50	CF,(ARD25T121J)	120Ω,±5%,1/4W		
R51	CF,(ARD25T121J)	120Ω,±5%,1/4W		
R52	CF,(ERD10TJ101A)	100Ω,±5%,1/8W		
R53	CF,(ERD10TJ101A)	100Ω,±5%,1/8W		
R54	CF,(ERD10TJ101A)	100Ω,±5%,1/8W		
R55	CF,(ARD25T121J)	120Ω,±5%,1/4W		
R56	CF,(ARD25T121J)	120Ω,±5%,1/4W		
R57	CF,(ERD10TJ101A)	100Ω,±5%,1/8W		
R58	CF,(ERD10TJ101A)	100Ω,±5%,1/8W		
R59	CF,(ARD25T121J)	120Ω,±5%,1/4W		
R60	CF,(ERD10TJ471A)	470Ω,±5%,1/8W		
R61	CF,(ERD10TJ181A)	180Ω,±5%,1/8W		
R62	CF,(ERD10TJ221A)	220Ω,±5%,1/8W		
R63	CF,(ERD10TJ471A)	470Ω,±5%,1/8W		
R64	Single in-line array, (IHR-8-271JA)	270Ω x 8,1/8W		
R65	Single in-line array, (IHR-8-181JA)	180Ω x 8,1/8W		
R66	CF,(ARD25T271J)	270Ω,±5%,1/4W		
R67	CF,(ERD10TJ181A)	180Ω,±5%,1/8W		
R68	CF,(ERD10TJ271A)	270Ω,±5%,1/8W		
R69	CF,(ERD10TJ181A)	180Ω,±5%,1/8W		
R70	Single in-line array, (IHR-4-221JA)	220Ω x 4,1/8W		
R71	Single in-line array, (IHR-4-181JA)	180Ω x 4,1/8W		

( ): Manufacturer's part number
* : Selected at factory

Parts List : R-Z4 ERROR DETECTOR 32

CKT REF	DESCRIPTION	RATING		NOTE
R72	CF,(ERD10TJ181A)	180Ω,±5%,1/8W		
R73	CF,(ERD10TJ221A)	220Ω,±5%,1/8W		
R74	CF,(ERD10TJ471A)	470Ω,±5%,1/8W		
R75	Single in-line array, (IHR-4-151JA)	150Ω x 4,1/8W		
R76	Single in-line array, (IHR-4-181JA)	180Ω x 4,1/8W		
R77	CF,(ARD25T121J)	120Ω,±5%,1/4W		
R78	CF,(ERD10TJ101A)	100Ω,±5%,1/8W		
R79	Sinlge in-line array, (IHR-4-151JA)	150Ω x 4,1/8W		
R80	Single in-line array, (IHR-4-181JA)	180Ω x 4,1/8W		
R81	CF,(ERD10TJ101A)	100Ω,±5%,1/8W		
R82	Single in-line array, (IHR-4-181JA)	180Ω x 4,1/8W		
R83	Single in-line array, (IHR-4-221JA)	220Ω x 4,1/8W		
R84	CF,(ARD25T121J)	120Ω, 5%,1/4W		
R85	Single in-line array, (IHR-4-181JA)	180Ω x 4,1/8W		
R86	Single in-line array, (IHR-4-151JA)	150Ω x 4,1/8W		
R87	Single in-line array, (IHR-4-101JA)	100Ω x 4,1/8W		
R88	Single in-line array, (IHR-4-221JA)	220Ω x 4,1/8W		
R89	Single in-line array, (IHR-4-101JA)	100Ω x 4,1/8W		
R90	Single in-line array, (IHR-4-221JA)	220Ω x 4,1/8W		
R91	CF,(ERD10TJ510A)	51Ω,±5%,1/8W		
R92	CF,(ARD25T181J)	180Ω,±5%,1/4W		
R93	CF,(ARD25T221J)	220Ω,±5 %,1/4W		
R94	Var,MF,(RJ-6P 1kΩ)	1kΩ,1/2W		
R95	CF,(ARD25T392J)	3.9kΩ,±5%,1/4W		
R96	CF,(ERD10TJ101A)	100Ω,±5%,1/8W		
R97	CF,(ERD10TJ510A)	51Ω,±5%,1/8W		
R98	CF,(ERD10TJ151A)	150Ω,±5%,1/8W		
R99	CF,(ERD10TJ101A)	100Ω,±5%,1/8W		
R100	CF,(ERD10TJ510A)	51Ω,±5%,1/8W		
R101	CF,(ERD10TJ391A)	390Ω,±5%,1/8W		
R102	CF,(ERD10TJ510A)	51Ω,±5%,1/8W		
R103	CF,(ERD10TJ101A)	100Ω,±5%,1/8W		
R104	CF,(ARD25T131J)	130Ω,±5%,1/4W		
R105	CF,(ERD10TJ820A)	82Ω,±5%,1/8W		

( ): Manufacturer's part number
* : Selected at factory

Parts List : R-Z4 ERROR DETECTOR 32

CKT REF	DESCRIPTION	RATING		NOTE
R106	CF,(ERD10TJ391A)	390Ω,±5%,1/8W		
R107	CF,(ERD10TJ510A)	51Ω,±5%,1/8W		
R108	CF,(ERD10TJ101A)	100Ω,±5%,1/8W		
R109	CF,(ERD10TJ101A)	100Ω,±5%,1/8W		
R110	CF,(ERD10TJ510A)	51Ω,±5%,1/8W		
R111	CF,(ERD10TJ101A)	100Ω,±5%,1/8W		
R112	CF,(ERD10TJ820A)	82Ω,±5%,1/8W		
R113	CF,(ARD25T131J)	130Ω,±5%,1/4W		
R114	CF,(ARD25T131J)	130Ω,±5%,1/4W		
R115	CF,(ERD10TJ181A)	180Ω,±5%,1/8W		
R116	CF,(ERD10TJ221A)	220Ω,±5%,1/8W		
R117	CF,(ERD10TJ820A)	82Ω,±5%,1/8WW		
R118	CF,(ERD10TJ101A)	100Ω,±5%,1/8W		
R119	CF,(ARD25T121J)	120Ω,±5%,1/4W		
R120	CF,(ERD10TJ471A)	470Ω,±5%,1/8W		
R121	CF,(ERD10TJ471A)	470Ω,±5%,1/8W		
R122	CF,(ERD10TJ271A)	270Ω,±5%,1/8W		
R123	CF,(ARD25T121J)	120Ω,±5%,1/4W		
R124	CF,(ERD10TJ101A)	100Ω,±5%,1/8W		
R125	CF,(ERD10TJ471A)	470Ω,±5%,1/8W		
R126	CF,(ERD10TJ471A)	470Ω,±5%,1/8W		
R127	CF,(ARD25T121J)	120Ω,±5%,1/4W		
R128	CF,(ERD10TJ101A)	100Ω,±5%,1/8W		
R129	CF,(ERD10TJ471A)	470Ω,±5%,1/8W		
R130	CF,(ERD10TJ221A)	220Ω,±5%,1/8W		
R131	CF,(ERD10TJ181A)	180Ω,±5%,1/8W		
R132	CF,(ERD10TJ101A)	100Ω,±5%,1/8W		
R133	CF,(ARD25T121J)	120Ω,±5%,1/4W		
R134	CF,(ERD10TJ101A)	100Ω,±5%,1/8W		
R135	CF,(ARD25T121J)	120Ω,±5%,1/4W		
R136	CF,(ERD10TJ101A)	100Ω,±5%,1/8W		
R137	CF,(ARD25T121J)	120Ω,±5%,1/4W		
R138	CF,(ERD10TJ471A)	470Ω,±5%,1/8W		
R139	CF,(ERD10TJ471A)	470Ω,±5%,1/8W		
R140	Single in-line array, (IHR-4-472JB)	4.7kΩ x 4,1/8W		
R141	Single in-line array, (IHR-4-472JB)	4.7kΩ x 4,1/8W		
R142	Single in-line array, (IHR-4-472JB)	4.7kΩ x 4,1/8W		
R143	Single in-line array, (IHR-4-271JA)	270Ω x 4,1/8W		
R144	Single in-line array, (IHR-4-271JA)	270Ω x 4,1/8W		
R145	CF,(ERD10TJ820A)	82Ω,±5%,1/8W		

( ): Manufacturer's part number
* : Selected at factory

Parts List : R-Z4 ERROR DETECTOR 32

CKT REF	DESCRIPTION	RATING		NOTE
R146	CF,(ARD25T131J)	130Ω,±5%,1/4W		
R147	CF,(ERD10TJ510A)	51Ω,±5%,1/8W		
R148	CF,(ERD10TJ151A)	150Ω,±5%,1/8W		
R149	CF,(ERD10TJ101A)	100Ω,±5%,1/8W		
R150	CF,(ERD10TJ510A)	51Ω,±5%,1/8W		
R151	CF,(ERD10TJ510A)	51Ω,±5%,1/8W		
R152	CF,(ERD10TJ510A)	51Ω,±5%,1/8W		
R153	CF,(ERD10TJ101A)	100Ω,±5%,1/8W		
R154	CF,(ERD10TJ101A)	100Ω,±5%,1/8W		
R155	CF,(ERD10TJ820A)	82Ω,±5%,1/8W		
R156	CF,(ARD25T131J)	130Ω,±5%,1/4W		
R157	CF,(ERD10TJ820A)	82Ω,±5%,1/8W		
R158	CF,(ARD25T131J)	130Ω,±5%,1/4W		
R159	Var,MF,(RJ-6P 1kΩ)	1kΩ,1/2W		
R160	CF,(ARD25T392J)	3.9kΩ,±5%,1/4W		
R161	CF,(ARD25T181J)	180Ω,±5%,1/4W		
R162	CF,(ARD25T221J)	220Ω,±5%,1/4W		
R163	CF,(ERD10TJ101A)	100Ω,±5%,1/8W		
R164	CF,(ARD25T121J)	120Ω,±5%,1/4W		
R165	CF,(ARD25T471J)	470Ω,±5%,1/4W		
Z 1	Delay line, (1L4-F41-1.1NS)	1.1ns		
Z 2	Delay line, (1L4-F41 1.5-2.5NS)	1.5-2.[illegible]ns		1.8ns
Z 3	Delay line, (1L4-F41 1.5-2.5NS)	1.5-2.[illegible]ns		1.8ns
Z 4	Delay line, (1L4-F41-2.0NS)	[illegible]		
Z 5	Delay line, (1L4-F41-1.7NS)	[illegible]		
Z 6	Delay line, (1L4-F41 1.5-2.5NS)	1.5-2.5ns		1.8ns
Z 7	Delay line, (1L4 F41 0.6-1.5NS)	[illegible]		[illegible]
Z 8	Delay line (1L4-F41 1.5-2.5NS)	[illegible]		[illegible]
Z 9	Not assigned			
Z 10	Not assigned			
Z 11	Delay line, (1L4-F41 1.8NS)	[illegible]		

( ): Manufacturer's part number
* : Selected at factory

Parts List : R-Z5 COUNTER 33

CKT REF	DESCRIPTION	RATING		NOTE
C 1	Elect,(CE04C1A470)	47μF,±20%,10V		
C 2	Elect,(CE04C1A470)	47μF,±20%,10V		
C 3	Elect,(CE04C1A470)	47μF,±20%,10V		
C 4 to C39	Cer,(CK924F1H104Z)	0.1μF,+80/-20%,50V		
J 1	Pattern			
Q 1	IC,(μPD8253C-2)			
Q 2	IC,(μPD8253C-2)			
Q 3	IC,(74LS257)			
Q 4	IC,(74LS393)			
Q 5	IC,(μPD8253C-2)			
Q 6	IC,(74LS245)			
Q 7	IC,(74F74PC)			
Q 8	IC,(74LS257)			
Q 9	IC,(74LS74A)			
Q10	IC,(74LS138)			
Q11	IC(74LS244)			
Q12	IC,(74LS393)			
Q13	IC,(74LS257)			
Q14	IC,(HD10125)			
Q15	IC,(HD10125)			
Q16	IC,(HD10131)			
Q17	IC,(74LS393)			
Q18	IC,(74LS10)			
Q19	IC,(74LS257)			
Q20	IC,(74F74PC)			
Q21	IC,(HD10131)			
Q22	IC,(MC10H131L)			
Q23	IC,(MC10H131L)			
Q24	IC,(HD10125)			
Q25	IC,(HD10124)			
Q26	IC,(74LS393)			
Q27	IC,(74LS257)			
Q28	IC,(HD10125)			
Q29	IC,(HD100102)			
Q30	IC,(HD100102)			
Q31	IC,(HD100102)			
Q32	IC,(74LS257)			
Q33	IC,(74F74PC)			
Q34	IC,(HD10131)			
Q35	IC,(MC10H131L)			

( ): Manufacturer's part number
* : Selected at factory

Parts List : R-Z5 COUNTER 33

CKT REF	DESCRIPTION	RATING		NOTE
Q36	IC,(MC10H131L)			
Q37	IC,(F100131)			
Q38	IC,(HD100102)			
Q39	IC,(μPD8253C-2)			
Q40	IC,(74LS257)			
Q41	IC,(74F74PC)			
Q42	IC,(HD10125)			
Q43	IC,(HD10131)			
Q44	IC,(74LS393)			
Q45	IC,(74LS257)			
R 1	CF,(ERD10TJ471A)	470Ω,±5%,1/8W		
R 2	CF,(ERD10TJ181A)	180Ω,±5%,1/8W		
R 3	CF,(ERD10TJ271A)	270Ω,±5%,1/8W		
R 4	CF,(ERD10TJ271A)	270Ω,±5%,1/8W		
R 5	CF,(ERD10TJ181A)	180Ω,±5%,1/8W		
R 6	CF,(ERD10TJ471A)	470Ω,±5%,1/8W		
R 7	CF,(ERD10TJ471A)	470Ω,±5%,1/8W		
R 8	CF,(ERD10TJ181A)	180Ω,±5%,1/8W		
R 9	CF,(ERD10TJ271A)	270Ω,±5%,1/8W		
R10	CF,(ERD10TJ271A)	270Ω,±5%,1/8W		
R11	CF,(ERD10TJ181A)	180Ω,±5%,1/8W		
R12	CF,(ERD10TJ471A)	470Ω,±5%,1/8W		
R13	CF,(ERD10TJ271A)	270Ω,±5%,1/8W		
R14	CF,(ERD10TJ181A)	180Ω,±5%,1/8W		
R15	CF,(ERD10TJ271A)	270Ω,±5%,1/8W		
R16	CF,(ERD10TJ271A)	270Ω,±5%,1/8W		
R17	CF,(ERD10TJ181A)	180Ω,±5%,1/8W		
R18	CF,(ERD10TJ181A)	180Ω,±5%,1/8W		
R19	CF,(ERD10TJ271A)	270Ω,±5%,1/8W		
R20	CF,(ERD10TJ271A)	270Ω,±5%,1/8W		
R21	CF,(ERD10TJ181A)	180Ω,±5%,1/8W		
R22	CF,(ERD10TJ181A)	180Ω,±5%,1/8W		
R23	CF,(ERD10TJ221A)	220Ω,±5%,1/8W		
R24	CF,(ERD10TJ181A)	180Ω,±5%,1/8W		
R25	CF,(ERD10TJ471A)	470Ω,±5%,1/8W		
R26	CF,(ERD10TJ471A)	470Ω,±5%,1/8W		
R27	CF,(ERD10TJ181A)	180Ω,±5%,1/8W		
R28	CF,(ERD10TJ271A)	270Ω,±5%,1/8W		
R29	CF,(ERD10TJ471A)	470Ω,±5%,1/8W		
R30	CF,(ERD10TJ181A)	180Ω,±5%,1/8W		
R31	CF,(ERD10TJ271A)	270Ω,±5%,1/8W		
R32	CF,(ERD10TJ181A)	180Ω,±5%,1/8W		
R33	CF,(ERD10TJ221A)	220Ω,±5%,1/8W		

( ): Manufacturer's part number
* : Selected at factory

Parts List : R-Z5 COUNTER 33

CKT REF	DESCRIPTION	RATING		NOTE
R34	CF,(ERD10TJ221A)	220Ω,±5%,1/8W		
R35	CF,(ERD10TJ181A)	180Ω,±5%,1/8W		
R36	CF,(ERD10TJ181A)	180Ω,±5%,1/8W		
R37	CF,(ERD10TJ221A)	220Ω,±5%,1/8W		
R38	CF,(ERD10TJ221A)	220Ω,±5%,1/8W		
R39	CF,(ERD10TJ181A)	180Ω,±5%,1/8W		
R40	CF,(ERD10TJ471A)	470Ω,±5%,1/8W		
R41	CF,(ERD10TJ181A)	180Ω,±5%,1/8W		
R42	CF,(ERD10TJ221A)	220Ω,±5%,1/8W		
R43	CF,(ERD10TJ101A)	100Ω,±5%,1/8W		
R44	CF,(ARD25T121J)	120Ω,±5%,1/4W		
R45	CF,(ARD25T121J)	120Ω,±5%,1/4W		
R46	CF,(ERD10TJ101A)	100Ω,±5%,1/8W		
R47	CF,(ERD10TJ151A)	150Ω,±5%,1/8W		
R48	CF,(ARD25T181J)	180Ω,±5%,1/4W		
R49	CF,(ARD25T121J)	120Ω,±5%,1/4W		
R50	CF,(ERD10TJ101A)	100Ω,±5%,1/8W		
R51	CF,(ERD10TJ101A)	100Ω,±5%,1/8W		
R52	CF,(ARD25T121J)	120Ω,±5%,1/4W		
R53	CF,(ERD10TJ271A)	270Ω,±5%,1/8W		
R54	CF,(ERD10TJ181A)	180Ω,±5%,1/8W		
R55	CF,(ERD10TJ181A)	180Ω,±5%,1/8W		
R56	CF,(ERD10TJ271A)	270Ω,±5%,1/8W		
R57	CF,(ERD10TJ181A)	180Ω,±5%,1/8W		
R58	CF,(ERD10TJ271A)	270Ω,±5%,1/8W		
R59	CF,(ERD10TJ181A)	180Ω,±5%,1/8W		
R60	CF,(ERD10TJ221A)	220Ω,±5%,1/8W		
R61	CF,(ERD10TJ471A)	470Ω,±5%,1/8W		
R62	CF,(ERD10TJ181A)	180Ω,±5%,1/8W		
R63	CF,(ERD10TJ271A)	270Ω,±5%,1/8W		
R64	CF,(ERD10TJ221A)	220Ω,±5%,1/8W		
R65	CF,(ERD10TJ181A)	180Ω,±5%,1/8W		
R66	CF,(ERD10TJ471A)	470Ω,±5%,1/8W		
R67	CF,(ERD10TJ101A)	100Ω,±5%,1/8W		
R68	CF,(ERD10TJ101A)	100Ω,±5%,1/8W		
R69	CF,(ERD10TJ471A)	470Ω,±5%,1/8W		
R70	CF,(ARD25T121J)	120Ω,±5%,1/4W		
R71	CF,(ERD10TJ471A)	470Ω,±5%,1/8W		
R72	CF,(ERD10TJ471A)	470Ω,±5%,1/8W		
R73	CF,(ARD25T121J)	120Ω,±5%,1/4W		
R74	CF,(ERD10TJ101A)	100Ω,±5%,1/8W		
R75	CF,(ARD25T121J)	120Ω,±5%,1/4W		
R76	CF,(ERD10TJ471A)	470Ω,±5%,1/8W		
R77	CF,(ERD10TJ271A)	270Ω,±5%,1/8W		
R78	CF,(ERD10TJ181A)	180Ω,±5%,1/8W		

( ): Manufacturer's part number
* : Selected at factory

Parts List : R-Z5 COUNTER 33

CKT REF	DESCRIPTION	RATING		NOTE
R79	CF,(ERD10TJ471A)	470Ω,±5%,1/8W		
R80	CF,(ERD10TJ181A)	180Ω,±5%,1/8W		
R81	CF,(ERD10TJ271A)	270Ω,±5%,1/8W		
R82	CF,(ERD10TJ471A)	470Ω,±5%,1/8W		
Z 1	Delay line, (1L4-F41 1.5~2.5NS)	1.5~2.5ns		2.1ns
Z 2	Delay line, (1L4-F41 2.5NS)	2.5ns		

( ): Manufacturer's part number
* : Selected at factory

44W83037 4/4

Parts List : R-Z6 CONTROL 34

CKT REF	DESCRIPTION	RATING		NOTE
A 1	Buzzer,(KMB-06)			
C 1	Elect,(CE04C1A470)	47μF,+20%,10V		
C 2	Cer,(CC45CH1H * JY)	30 to 33pF,±5%,50V		Q'ty 1 to
	Cer,(CC924CH1H * J)	36 to 100pF,±5%,50V		3, *
C 3	Cer,(CK924F1H104Z)	0.1μF,+80/-20%,50V		
C 4	Var,cer,(TZ03R300A)	30pF,±0.05pF,100V		
C 5	Elect,(CE04C1A470)	47μF,+20%,10V		
C 6	Elect,(CE02W1V102)	1000μF,+20%,35V		
C 7	Elect,(CE04C1A470)	47μF,+20%,10V		
C 8	Elect,(CE04C1C330)	33μF,+20%,16V		
C 9	Elect,(CE04C1C330)	33μF,+20%,16V		
C10	Cer,(CK924F1H104Z)	0.1μF,+80/-20%,50V		
C11	Cer,(CK924F1H104Z)	0.1μF,+80/-20%,50V		
C12	Cer,(CK924F1H104Z)	0.1μF,+80/-20%,50V		
C13	Cer,(CK924F1H104Z)	0.1μF,+80/-20%,50V		
C14	Cer,(CK924F1H104Z)	0.1μF,+80/-20%,50V		
C15	Cer,(CK924F1H104Z)	0.1μF,+80/-20%,50V		
C16	Cer,(CK924F1H104Z)	0.1μF,+80/-20%,50V		
C17	Cer,(CK924F1H104Z)	0.1μF,+80/-20%,50V		
C18	Cer,(CK924F1H104Z)	0.1μF,+80/-20%,50V		
C19	Elect,(CE04C1J2R2)	2.2μF,±20%,63V		
C20	Elect,(CE04C1J2R2)	2.2μF,+20%,63V		
C21	Cer,(CK924F1H104Z)	0.1μF,+80/-20%,50V		
C22	Cer,(CK924F1H104Z)	0.1μF,+80/-20%,50V		
C23	Cer,(CK924F1H104Z)	0.1μF,+80/-20%,50V		
C24	Cer,(CK924F1H104Z)	0.1μF,+80/-20%,50V		
C25	Cer,(CK924F1H104Z)	0.1μF,+80/-20%,50V		
C26	Cer,(CK924F1H104Z)	0.1μF,+80/-20%,50V		
C27	Cer,(CK924F1H104Z)	0.1μF,+80/-20%,50V		
C28	Cer,(RPE114CH333J50)	0.033μF,±5%,50V		
C29	Cer,(CK924F1H104Z)	0.1μF,+80/-20%,50V		
C30	Cer,(CK924F1H104Z)	0.1μF,+80/-20%,50V		
C31	Cer,(CK924F1H104Z)	0.1μF,+80/-20%,50V		
C32	Elect,(CE04C1J4R7)	4.7μF,±20%,63V		
C33 to C45	Cer,(CK924F1H104Z)	0.1μF,+80/-20%,50V		
C46	Elect,(CE04C1C330)	33μF,±20%,16V		
C47	Elect,(CE04C1C330)	33μF,+20%,16V		
C48	Elect,(CE04C1A470)	47μF,±20%,10V		
C49	Elect,(CE04C1V470)	47μF,±20%,35V		
C50	Cer,(CK924F1H104Z)	0.1μF,+80/-20%,50V		

( ): Manufacturer's part number
* : Selected at factory

44W83038 1/4

Parts List : R-Z6 CONTROL 34

CKT REF	DESCRIPTION	RATING		NOTE
C51	Cer,(CK924F1H104Z)	0.1μF,+80/-20%,50V		
J 1	Pattern			
J 2	Plug, (CNF3-20P-2.54DS)			
J 3	Plug, (CNF3-20P-2.54DS)			
J 4	Plug, (CNF3-20P-2.54DS)			
J 5	Plug, (CNF3-34P-2.54DS)			
K 1	Relay,(PG1C-05D)			
Q 1	IC,(μPC393C)			
Q 2	IC,(RP5C15)			
Q 3	IC,(74LS244)			
Q 4	Di,breakdown,(RD5.1E)	4.8 to 5.37V,400mW		
Q 5	IC,(74LS123)			
Q 6	IC,(74HC10)			
Q 7	IC,(74LS244)			
Q 8	IC,(74LS244)			
Q 9	IC,(μPD8255AC-2)			
Q10	IC,(74LS245)			
Q11	IC,(TL7705CPB)			
Q12	Di,(1S953)			
Q13	IC,(74LS139)			
Q14	IC,(LH0082A)			
Q15	IC,(74LS244)			
Q16	IC,(μPD8255AC-2)			
Q17	IC,(74LS14)			
Q18	IC,(74LS244)			
Q19	IC,(LH0082A)			
Q20	IC,(μPD27C256D-20)			
Q21	IC,(74LS244)			
Q22	IC,(74LS139)			
Q23	IC,(μPD7002C)			
Q24	Di,(1SS99)			
Q25	Di,(1SS99)			
Q26	Di,(1SS97)			
Q27	Di,(1SS97)			
Q28	IC,(TC4093BP)			

( ): Manufacturer's part number
* : Selected at factory

44W83038 2/4

Parts List : R-Z6 CONTROL 34

CKT REF	DESCRIPTION	RATING		NOTE
Q29	IC,(74LS244)			
Q30	IC,(74LS32)			
Q31	IC,(HN482764G)			
Q32	IC,(74LS244)			
Q33	IC,(74LS11)			
Q34	IC,(74LS74A)			
Q35	IC,(μPC151C)			
Q36	IC,(μPD780C-1)			
Q37	IC,(μPD43256C-10L)			
Q38	IC,(74LS244)			
Q39	IC,(74LS138)			
Q40	IC,(74LS32)			
Q41	Di,(1S953)			
Q42	Di,(1S953)			
Q43	IC,(74LS74A)			
Q44	IC,(7438)			
Q45	IC,(74LS245)			
Q46	IC,(74LS245)			
Q47	IC,(74LS244)			
Q48	IC,(PC817)			
R 1	Var,MF,(RJ-6S 1kΩ)	1kΩ,1/2W		
R 2	CF,(ARD25T222J)	2.2kΩ,±5%,1/4W		
R 3	CF,(ARD25T222J)	2.2kΩ,±5%,1/4W		
R 4	CF,(ARD25T122J)	1.2kΩ,±5%,1/4W		
R 5	CF,(ARD25T103J)	10kΩ,±5%,1/4W		
R 6	CF,(ARD25T103J)	10kΩ,±5%,1/4W		
R 7	CF,(ARD25T222J)	2.2kΩ,±5%,1/4W		
R 8	CF,(ARD25T222J)	2.2kΩ,±5%,1/4W		
R 9	CF,(ARD25T104J)	100kΩ,±5%,1/4W		
R10	Single in-line array, (IHR-8-103JA)	10kΩ x 8,1/8W		
R11	Single in-line array, (IHR-8-103JA)	10kΩ x 8,1/8W		
R12	Single in-line array, (IHR-8-103JA)	10kΩ x 8,1/8W		
R13	CF,(ARD25T104J)	100kΩ,±5%,1/4W		
R14	CF,(ARD25T103J)	10kΩ,±5%,1/4W		
R15	CF,(ARD25T103J)	10kΩ,±5%,1/4W		
R16	Single in-line array, (IHR-8-103JA)	10kΩ x 8,1/8W		
R17	CF,(ARD25T104J)	100kΩ,±5%,1/4W		
R18	CF,(ARD25T104J)	100kΩ,±5%,1/4W		
R19	CF,(ARD25T103J)	10kΩ,±5%,1/4W		
R20	CF,(ARD25T103J)	10kΩ,±5%,1/4W		

( ): Manufacturer's part number
* : Selected at factory

44W83038 3/4

Parts List : R-Z6 CONTROL 34

CKT REF	DESCRIPTION	RATING		NOTE
R21	CF,(ARD25T103J)	10kΩ,±5%,1/4W		
R22	CF,(ARD25T103J)	10kΩ,±5%,1/4W		
R23	CF,(ARD25T103J)	10kΩ,±5%,1/4W		
R24	CF,(ARD25T103J)	10kΩ,±5%,1/4W		
R25	CF,(ARD25T151J)	150Ω,±5%,1/4W		
R26	CF,(ARD25T103J)	10kΩ,±5%,1/4W		
R27	Single in-line array, (IHR-8-103JA)	10kΩ x 8,1/8W		
R28	CF,(ARD25T472J)	4.7kΩ,±5%,1/4W		
S 1	Dip,(BP-8)			
X 1	XTAL OSC,(MX-38)	32.768kHz		
Z 1	XTAL OSC,(TCO-706B)	8MHz		
Z 2	Battery,(ER6(AA))	3.6V		

( ): Manufacturer's part number
* : Selected at factory

44W83038 4/4

Parts List : R-Z7 POWER SUPPLY 35

CKT REF	DESCRIPTION	RATING		NOTE
C 1	Elect,(CE04C1J470)	47μF,±20%,63V		
C 2	Elect,(CE04C1E330)	33μF,±20%,25V		
C 3	Elect,(CE04C1A470)	47μF,±20%,10V		
C 4	Elect,(CE04C1A470)	47μF,±20%,10V		
C 5	Elect,(CE04C1E330)	33μF,±20%,25V		
C 6	Elect,(CE04C1J470)	47μF,±20%,63V		
C 7	Elect,(SXE25VB-1000 φ12.5 x 25L)	1000μF,±20%,25V		
C 8	Elect,(SXE16VB-1200 φ12.5 x 20L)	1200μF,±20%,16V		
C 9	Elect,(SXE16VB-1200 φ12.5 x 20L)	1200μF,±20%,16V		
C10	Elect,(SXE16VB-1200 φ12.5 x 20L)	1200μF,±20%,16V		
C11	Elect,(SXE16VB-1200 φ12.5 x 20L)	1200μF,±20%,16V		
C12	Elect,(SXE16VB-1200 φ12.5 x 20L)	1200μF,±20%,16V		
C13	Elect,(SXE16VB-1200 φ12.5 x 20L)	1200μF,±20%,16V		
C14	Elect,(SXE16VB-1200 φ12.5 x 20L)	1200μF,±20%,16V		
C15	Elect,(SXE16VB-1200 φ12.5 x 20L)	1200μF,±20%,16V		
C16	Elect,(SXE16VB-1200 φ12.5 x 20L)	1200μF,±20%,16V		
C17	Plast,(ECQ-P1 102FZ)	1000pF,±1%,100V		
C18	Plast,(ECQ-P1 102FZ)	1000pF,±1%,100V		
C19	Plast,(ECQ-P1 102FZ)	1000pF,±1%,100V		
C20	Plast,(ECQ-P1 102FZ)	1000pF,±1%,100V		
C21	Plast,(ECQ-P1 102FZ)	1000pF,±1%,100V		
C22	Cer,(CC924CH1H102J)	1000pF,±5%,50V		
C23	Cer,(CK924F1H104Z)	0.1μF,+80/-20%,50V		
C24	Not assigned			
C25	Cer,(CK924F1H104Z)	0.1μF,+80/-20%,50V		
C26	Cer,(CK924F1H104Z)	0.1μF,+80/-20%,50V		
C27	Cer,(CK924F1H104Z)	0.1μF,+80/-20%,50V		
C28	Cer,(CK924F1H104Z)	0.1μF,+80/-20%,50V		
C29	Plast,(ECQ-P1 102FZ)	1000pF,±1%,100V		
C30	Not assigned			
C31	Plast,(ECQ-P1 102FZ)	1000pF,±1%,100V		
C32	Plast,(ECQ-P1 102FZ)	1000pF,±1%,100V		
C33	Elect,(CE04C1A470)	47μF,±20%,10V		
C34	Elect,(CE04C1A470)	47μF,±20%,10V		
C35	Elect,(CE04C1E330)	33μF,±20%,25V		

( ): Manufacturer's part number
* : Selected at factory

44W83039 1/6

Parts List : R-Z7 POWER SUPPLY 35

CKT REF	DESCRIPTION	RATING		NOTE
C36	Elect,(CE04C1J470)	47μF,±20%,63V		
C37	Not assigned			
C38	Elect,(SXE25VB-1000 φ12.5 x 25L)	1000μF,±20%,25V		
C39	Elect,(SXE25VB-1000 φ12.5 x 25L)	1000μF,±20%,25V		
C40	Elect,(SXE50VB-820 φ16 x 25L)	820μF,±20%,50V		
C41	Not assigned			
C42	Elect,(CE04C1C330)	33μF,±20%,16V		
C43	Elect,(CE04C1C330)	33μF,±20%,16V		
C44	Elect,(SXB35VB-1200 φ16 x 25L)	1200μF,±20%,35V		
C45	Not assigned			
C46	Not assigned			
C47	Plast,(ECQ-V1H474JW)	0.47μF,±5%,50V		
C48	Plast,(ECQ-V1H474JW)	0.47μF,±5%,50V		
C49	Plast,(ECQ-V1H474JW)	0.47μF,±5%,50V		
C50	Not assigned			
C51	Not assigned			
C52	Not assigned			
C53	Cer,(CK924F1H104Z)	0.1μF,+80/-20%,50V		
C54	Not assigned			
C55	Cer,(CK924F1H104Z)	0.1μF,+80/-20%,50V		
C56	Not assigned			
C57	Not assigned			
C58	Not assigned			
C59	Not assigned			
C60	Cer,(CK924F1H104Z)	0.1μF,+80/-20%,50V		
F 1	Fuse,(MF51NN250V 5A DC01)	5A,250V		
F 2	Fuse,(MF51NN250V 5A DC01)	5A,250V		
F 3	Fuse,(MF51NN250V 5A DC01)	5A,250V		
F 4	Fuse,(MF51NN250V 6.3A DC01)	6.3A,250V		
F 5	Not assigned			
F 6	Fuse,(MF51NN250V 1A DC01)	1A,250V		
F 7	Fuse,(MF51NN250V 1A DC01)	1A,250V		
F 8	Fuse,(MF51NN250V 1A DC01)	1A,250V		

( ): Manufacturer's part number
* : Selected at factory

44W83039 2/6

Parts List : R-Z7 POWER SUPPLY 35

CKT REF	DESCRIPTION	RATING		NOTE
F 9	Fuse,(MF51NN250V 2A DC01)	2A,250V		
J 1	Pattern			
L 1	Coil,(SK-21C-060-550)	550μH		
L 2	Coil,(SK-24S-110-100)	100μH		
L 3	Coil,(SK-24S-110-100)	100μH		
L 4	Coil,(SK-33S-140-150)	150μH		
L 5	Not assigned			
L 6	Coil,(SK-21C-060-550)	550μH		
L 7	Coil,(SK-21C-060-550)	550μH		
L 8	Coil,(SK-24S-045-3500W)	3.5mH		
L 9	Coil,(SC-10-100)	1mH		
L10	Coil,(SC-10-100)	1mH		
L11	Coil,(SC-10-100)	1mH		
M 1	Timer,(TM-0)	5000H		
Q 1	Tr,(2SC1826Ⓢ)			
Q 2	Tr,(2SA1154)			
Q 3	Tr,(2SC3164)			
Q 4	Tr,(2SC3164)			
Q 5	Tr,(2SC3164)			
Q 6	Tr,(2SC3164)			
Q 7	IC,(μPC494C)			
Q 8	IC,(μPC494C)			
Q 9	IC,(μPC451C)			
Q10	IC,(μPC451C)			
Q11	Not assigned			
Q12	IC,(S1-3122V)			
Q13	IC,(S1-3122V)			
Q14	Not assigned			
Q15	Photocoupler,(PC618)			
Q16	Photocoupler,(PC618)			
Q17	Di,breakdown,(RD13E)	12.11 to 13.66V, 400mW		
Q18	IC,(μPC14324H)			
Q19	Rectifier,(V19E-1)			
Q20	Rectifier,(V19E-1)			

( ): Manufacturer's part number
* : Selected at factory

44W83039 3/6

Parts List : R-Z7 POWER SUPPLY 35

CKT REF	DESCRIPTION	RATING		NOTE
Q21	Rectifier,(V19E-1)			
Q22	Rectifier,(V19E-1)			
Q23	Rectifier,(V19E-1)			
Q24	Rectifier,(V19E-1)			
Q25	Rectifier,(V19E-1)			
Q26	Rectifier,(V19E-1)			
Q27	Di,(1S955)			
Q28	Di,(1S955)			
Q29	Not assigned			
Q30	Di,breakdown,(RD2.7E)	2.5 to 2.93V,400mW		
Q31	Rectifier,(V19E-1)			
Q32	Rectifier,(V19E-1)			
Q33	Rectifier,(V19E-1)			
Q34	Rectifier,(V19E-1)			
Q35	Rectifier,(V19E-1)			
Q36	Rectifier,(V19E-1)			
Q37	Di,(1S955)			
Q38	Di,(1S955)			
Q39	Not assigned			
Q40	Not assigned			
Q41	Rectifier,(ESAC92-02)			
Q42	Rectifier,(S10SC4MR)			
Q43	Rectifier,(S10SC4MR)			
Q44	Rectifier,(D5LC20)			
Q45	Not assigned			
Q46	Rectifier,(D5LC20)			
Q47	Rectifier,(D5LC20)			
Q48	Rectifier,(D5LC20)			
Q49	Di,breakdown,(RD2.7E)	2.5 to 2.93V,400mW		
Q50	Di,breakdown,(RD6.2E)	5.78 to 6.44V,400mW		
R 1	Not assigned			
R 2	Not assigned			
R 3	MF,(RS1FB4.7kΩJ)	4.7kΩ,±5%,1W		
R 4	MF,(RS2FB100ΩJ)	100Ω,±5%,2W		
R 5	CF,(ARD25T681J)	680Ω,±5%,1/4W		
R 6	CF,(ARD25T102J)	1kΩ,±5%,1/4W		
R 7	CF,(ARD25T332J)	3.3kΩ,±5%,1/4W		
R 8	CF,(ARD25T331J)	330Ω,±5%,1/4W		
R 9	CF,(ARD25T * J)	10k to 180kΩ,±5%, 1/4W		Q'ty 1 to 3, *
R10	CF,(ARD25T102J)	1kΩ,±5%,1/4W		
R11	Var,MF,(RJ-6S 500Ω)	500Ω,1/2W		
R12	CF,(ARD25T561J)	560Ω,±5%,1/4W		

( ): Manufacturer's part number
* : Selected at factory

Parts List : R-Z7 POWER SUPPLY 35

CKT REF	DESCRIPTION	RATING		NOTE
R13	CF,(ARD25T471J)	470Ω,±5%,1/4W		
R14	CF,(ARD25T103J)	10kΩ,±5%,1/4W		
R15	CF,(ARD25T221J)	220Ω,±5%,1/4W		
R16	CF,(ARD25T222J)	2.2kΩ,±5%,1/4W		
R17	CF,(ARD25T470J)	47Ω,±5%,1/4W		
R18	CF,(ARD25T100J)	10Ω,±5%,1/4W		
R19	CF,(ARD25T101J)	100Ω,±5%,1/4W		
R20	CF,(ARD25T470J)	47Ω,±5%,1/4W		
R21	CF,(ARD25T100J)	10Ω,±5%,1/4W		
R22	CF,(ARD25T101J)	100Ω,±5%,1/4W		
R23	MF,(RS2FB100ΩJ)	100Ω,±5%,2W		
R24	MF,(RN14K2H470J)	47Ω,±5%,1/2W		
R25	MF,(RS2FB100ΩJ)	100Ω,±5%,2W		
R26	Not assigned			
R27	CF,(ARD25T332J)	3.3kΩ,±5%,1/4W		
R28	CF,(ARD25T331J)	330Ω,±5%,1/4W		
R29	Not assigned			
R30	CF,(ARD25T222J)	2.2kΩ,±5%,1/4W		
R31	Var,MF,(RJ-6S 1kΩ)	1kΩ,1/2W		
R32	CF,(ARD25T122J)	1.2kΩ,±5%,1/4W		
R33	CF,(ARD25T152J)	1.5kΩ,±5%,1/4W		
R34	CF,(ARD25T223J)	22kΩ,±5%,1/4W		
R35	CF,(ARD25T821J)	820Ω,±5%,1/4W		
R36	CF,(ARD25T222J)	2.2kΩ,±5%,1/4W		
R37	CF,(ARD25T470J)	47Ω,±5%,1/4W		
R38	CF,(ARD25T100J)	10Ω,Ω5%,1/4W		
R39	CF,(ARD25T101J)	100Ω,±5%,1/4W		
R40	CF,(ARD25T470J)	47Ω,±5%,1/4W		
R41	CF,(ARD25T100J)	10Ω,±5%,1/4W		
R42	CF,(ARD25T101J)	100Ω,±5%,1/4W		
R43	CF,(ARD25T220J)	22Ω,±5%,1/4W		
R44	CF,(ARD25T220J)	22Ω,±5%,1/4W		
R45	CF,(ARD25T220J)	22Ω,±5%,1/4W		
R46	Not assigned			
R47	MF,(RN14K2H470J)	47Ω,±5%,1/2W		
R48	MF,(RN14K2H470J)	47Ω,±5%,1/2W		
R49	Not assigned			
R50	Not assigned			
R51	Not assigned			
R52	MF,(RS2FB1kΩJ)	1kΩ,±5%,1/2W		
R53	MF,(RS1FB47ΩJ)	47Ω,±5%,1W		
R54	MF,(RS1FB47ΩJ)	47Ω,±5%,1W		
R55	MF,(RS1FB47ΩJ)	47Ω,±5%,1W		
R56	Not assigned			
R57	MF,(RN14K2H681J)	680Ω,±5%,1/2W		

( ): Manufacturer's part number
* : Selected at factory

Parts List : R-Z7 POWER SUPPLY 35

CKT REF	DESCRIPTION	RATING		NOTE
R58	MF,(RN14K2H681J)	680Ω,±5%,1/2W		
R59	MF,(RS2FB680ΩJ)	680Ω,±5%,2W		
R60	Not assigned			
R61	Not assigned			
R62	CF,(ARD25T332J)	3.3kΩ,±5%,1/4W		
R63	CF,(ARD25T102J)	1kΩ,±5%,1/4W		
R64	CF,(ARD25T105J)	1MΩ,±5%,1/4W		
R65	CF,(ARD25T * J)	4.7 to 100Ω,±5%,1/4W		Q'ty 0 or 1, *
R66	CF,(ARD25T * J)	4.7 to 100Ω,±5%,1/4W		Q'ty 0 or 1, *
R67	CF,(ARD25T * J)	4.7 to 100Ω,±5%,1/4W		Q'ty 0 or 1, *
R68	CF,(ARD25T * J)	4.7 to 100Ω,±5%,1/4W		Q'ty 0 or 1, *
T 1	Trans,(44T75381)			
T 2	Trans,(44T75381)			
T 3	Trans,(44T75381)			
T 4	Trans,(44T75381)			
T 5	Trans,(43T23594)			
T 6	Trans,(43T23596)			

( ): Manufacturer's part number
* : Selected at factory

Parts List : R-Z8 DISPLAY 36

CKT REF	DESCRIPTION	RATING		NOTE
C 1	Cer,(CK924F1H104Z)	0.1μF,+80/-20%,50V		
C 2	Cer,(CK924F1H104Z)	0.1μF,+80/-20%,50V		
C 3	Cer,(CK924F1H104Z)	0.1μF,+80/-20%,50V		
C 4	Cer,(CK924F1H104Z)	0.1μF,+80/-20%,50V		
C 5	Cer,(CK924F1H104Z)	0.1μF,+80/-20%,50V		
C 6	Cer,(CK924F1H104Z)	0.1μF,+80/-20%,50V		
C 7	Elect,(CE02C1A470)	47μF,±20%,10V		
J 1	Connector, (CNF23-20D-AA050S)			
J 2	Plug,(DF1-2P-2.5DS)			
Q 1	IC,(74154)			
Q 2	IC,(74154)			
Q 3	IC,(μPA79C)			
Q 4	IC,(74LS156)			
Q 5	IC,(μPA79C)			
Q 6	IC,(μPD8279C-2)			
Q 7	IC,(μPD8279C-2)			
Q 8	IC,(74LS04)			
Q 9	Tr,(2SA952)			
Q10	Tr,(2SA952)			
Q11	Tr,(2SA952)			
Q12	Tr,(2SA952)			
Q13	Tr,(2SA952)			
Q14	Tr,(2SC1815)			
Q15 to Q40	Tr,(2SA952)			
Q41	Tr,(2SC1815)			
Q42	LED,(LN514GA)			
Q43	LED,(LN514GA)			
Q44	LED,(LN514GA)			
Q45	LED,(LN514GA)			
Q46	LED,(LN514GA)			
Q47	LED,(LN514GA)			
Q48 to Q63	LED,(LN513GA)			
Q64	LED,(LN342GPH)			
Q65	LED,(LN342GPH)			
Q66	LED,(LN342GPH)			
Q67	LED,(LN342GPH)			
Q68	LED,(LN342GPH)			

( ): Manufacturer's part number
* : Selected at factory

Parts List : R-Z8 DISPLAY 36

CKT REF	DESCRIPTION	RATING		NOTE
Q69	LED,(LN342GPH)			
Q70	LED,(LN342GPH)			
Q71	LED,(LN342GPH)			
Q72	LED,(LN342GPH)			
Q73	LED,(LN342GPH)			
Q74	LED,(LN442YPH)			
Q75	LED,(LN442YPH)			
Q76	LED,(LN242RPH)			
Q77	LED,(LN442YPH)			
Q78	LED,(LN242RPH)			
Q79	LED,(LN442YPH)			
Q80	LED,(LN242RPH)			
Q81	LED,(LN342GPH)			
Q82	LED,(LN342GPH)			
Q83	LED,(LN342GPH)			
Q84	LED,(LN242RPH)			
Q85 to Q116	LED,(LN342GPH)			
Q117 to Q132	Not assigned			
Q133	LED,(LN442YPH)			
R 1	CF,(ARD25T330J)	33Ω,±5%,1/4W		
R 2	Not assigned			
R 3	CF,(ARD25T271J)	270Ω,±5%,1/4W		
R 4	CF,(ARD25T271J)	270Ω,±5%,1/4W		
R 5	CF,(ARD25T102J)	1kΩ,±5%,1/4W		
R 6	CF,(ARD25T271J)	[illegible]		
R 7	CF,(ARD25T472J)	[illegible]		
R 8	CF,(ARD25T680J)	68Ω,±5%,1/4W		
R 9	CF,(ARD25T102J)	1kΩ,±5%,1/4W		
R 10	SIL type,(EXB-F14V271J)	270Ω x 14,±5%,1/8W		
R 11	SIL type,(EXB-F9E103J)	10kΩ x 9,±5%,1/8W		
R 12	SIL type,(EXB-F9E103J)	10kΩ x 9,±5%,1/8W		
R 13	SIL type,(EXB-F14V271J)	270Ω x 14,±5%,1/8W		
R 14	SIL type,(EXB-F14V271J)	270Ω x 14,±5%,1/8W		
R 15	SIL type,(EXB-F9E103J)	10kΩ x 9,±5%,1/8W		
R 16	SIL type,(EXB-F14V330J)	33Ω x 14,±5%,1/8W		
R 17	SIL type,(EXB-F14V680J)	68Ω x 14,±5%,1/8W		
R 18	SIL type,(EXB-F14V271J)	270Ω x 14,±5%,1/8W		
R 19	SIL type,(EXB-F9E103J)	10kΩ x 9,±5%,1/8W		
R 20	SIL type,(EXB-F9E472J)	4.7kΩ x 9,±5%,1/8W		

( ): Manufacturer's part number
* : Selected at factory

44W83040 2/3

Parts List : R-Z8 DISPLAY 36

CKT REF	DESCRIPTION	RATING		NOTE
R21	SIL type,(EXB-P14V470J)	47Ω x 14,±5%,1/8W		
R22	SIL type,(EXB-F9E223J)	22kΩ x 9,±5%,1/8W		
R23	SIL type,(EXB-F9E472J)	4.7kΩ x 9,±5%,1/8W		
R24	CF,(ARD25T621J)	620Ω,±5%,1/4W		
S 1	Key switch,(KEG10901)			
S 2	Key switch,(KEG10901)			
S 3	Key switch,(KEG10901)			
S 4	Key switch,(KEG10901)			
S 5	Key switch,(KEG10901)			
S 6	Key switch,(KEG10901)			
S 7	Key switch,(KEG10901)			
S 8	Key switch,(KEG10901)			
S 9	Key switch,(KEG10901)			
S10 to S20	Key switch,(HL-20LSYG)			
S21 to S33	Key switch,(KEG10901)			
S34	Key swtich,(HL-20NS)			
S35	Key swtich,(HL-20NS)			
S36	Key swtich,(HL-20NS)			
S37	Key switch,(HL-20LSYG)			
S38	Key switch,(HL-20LSYG)			
S39	Key switch,(HL-20LSYG)			
S40	Key switch,(HL-20LSYG)			
S41	Key switch,(HL-20NS)			
S42	Key switch,(KEG10901)			
S43	Key switch,(KEG10901)			
S44	Key switch,(KEG10901)			
S45	Key switch,(KEG10901)			
S46	Key swtich,(HL-20LSYG)			
S47	Key swtich,(HL-20NS)			
S48	Key swtich,(HL-20NS)			
S49	Key swtich,(HL-20NS)			
S50	Key swtich,(HL-20NS)			
S51	Key swtich,(HL-20NS)			
S52	Key swtich,(HL-20NS)			
S53	Key swtich,(HL-20NS)			

( ): Manufacturer's part number
* : Selected at factory

44W83040 3/3

Parts List : R-Z9 50 Ω/75 Ω TRANSDUCER 37

CKT REF	DESCRIPTION	RATING		NOTE
C 1	Cer,(CK733F1H104Z)	0.1μF,+80/-20%,50V		
C 2	Cer,(CK733F1H104Z)	0.1μF,+80/-20%,50V		
J 1	Receptacle,(BNC-R-NI)			
J 2	Receptacle,(BNC-R-NI)			
J 3	Receptacle,(KC-LR005)			
J 4	Receptacle,(KC-LR005)			
J 5	Plug,(DF1-5P2.5DSA)			
K 1	Relay,(G5Y-154P(12V))			
K 2	Relay,(G5Y-154P(12V))			
Q 1	Di,(1S953)			
Q 2	Di,(1S953)			
R 1	MF,(NRTF1/4C 150ΩJ)	150Ω,±5%,1/4W		
R 2	MF,(NRTF1/4C 150ΩJ)	150Ω,±5%,1/4W		

( ): Manufacturer's part number
* : Selected at factory

44W83041 1/1

Parts List : R-Z10 MOTHER BOARD 38

CKT REF	DESCRIPTION	RATING		NOTE
J 1	Connector, (225J-23621-587)			
J 2	Not assigned			
J 3	Not assigned			
J 4	Connector, (225J-23621-587)			
J 5	Connector, (225J-23621-587)			
J 6	Connector, (225J-23621-587)			
J 7	Connector, (225J-23621-587)			
J 8	Plug,(DF1-5P2.5DS)			
J 9	Plug,(DF1-2P2.5DS)			
J10	Plug,(DF1-10P2.5DSA)			
J11	Plug, (CNF3-20P-2.54DSA)			
J12	Plug,(DF1-2P2.5DS)			
Q 1	Di,breakdown,(RD5.1E)	4.8 to 5.37V,400mW		
R 1	CF,(ARD25T332J)	3.3kΩ,±5%,1/4W		

( ): Manufacturer's part number
* : Selected at factory

44W83043 1/1

Parts List : R-Z11 SWITCH 39

CKT REF	DESCRIPTION	RATING		NOTE
C 1	Elect,(KXC100VB4R7)	4.7μF,±20%,100V		
C 2	Elect,(SME80LISN-15000 50F)	15000μF,±20%,80V		
J 1	Plug,(DF1-2P2.5DSA)			
J 2	Plug,(DF1-8P2.5DSA)			
J 3	Connector,(CNF23-20D-AA40S)			
J 4	Plug,(DF1-10P2.5DSA)			
Q 1	Rectifier,(RB-152-LFB)			
R 1	MF,(RS2FB2.2kΩJ)	2.2kΩ,±5%,2W		
R 2	CF,(ARD25T121J)	120Ω,±5%,1/4W		
S 1	Dip,(BP-8)			
S 2	Dip,(BP-8)			

( ): Manufacturer's part number
* : Selected at factory

44W83044 | 1/1

Parts List : R-Z12 PRINTER UNIT 40

CKT REF	DESCRIPTION	RATING		NOTE
J 1	Connector,(DF1-5S-2.5R24)			
J 2	Connector,(DF1-5S-2.5R24)			
Z 1	PRINTER INTERFACE			44W85804
Z 2	PRINTER CONTROL			44W85805
Z 3	PRINTER,(FTP-020M008)			

( ): Manufacturer's part number
* : Selected at factory

44W85802 | 1/1

Parts List : R-Z12(Z1) PRINTER INTERFACE 41

CKT REF	DESCRIPTION	RATING		NOTE
C 1	Elect,(CE04W1A471)	470μF,±20%,10V		
C 2	Elect,(CE04W1A471)	470μF,±20%,10V		
C 3	Elect,(CE04W1V101)	100μF,±20%,35V		
C 4	Cer,(CC924CH1H * J)	12 to 33pF,±5%,50V		*
C 5	Not assigned			
C 6	Not assigned			
C 7	Not assigned			
C 8	Cer,(CK924F1H104Z)	0.1μF,+80/-20%,50V		
C 9	Cer,(CK924C1H103M)	0.01μF,±20%,50V		
C10	Cer,(CK924C1H103M)	0.01μF,±20%,50V		
C11	Cer,(CK924F1H104Z)	0.1μF,+80/-20%,50V		
C12	Cer,(CK924F1H104Z)	0.1μF,+80/-20%,50V		
C13	Cer,(CK924F1H104Z)	0.1μF,+80/-20%,50V		
C14	Cer,(CK924F1H104Z)	0.1μF,+80/-20%,50V		
C15	Cer,(CK924F1H104Z)	0.1μF,+80/-20%,50V		
C16	Cer,(CK924F1H104Z)	0.1μF,+80/-20%,50V		
C17	Cer,(CK924F1H104Z)	0.1μF,+80/-20%,50V		
C18	Cer,(CK924F1H104Z)	0.1μF,+80/-20%,50V		
C19	Cer,(CK924F1H104Z)	0.1μF,+80/-20%,50V		
C20	Cer,(CK924F1H104Z)	0.1μF,+80/-20%,50V		
C21	Cer,(CC924CH1H * J)	12 to 33pF,±5%,50V		*
C22	Cer,(CK924F1H104Z)	0.1μF,+80/-20%,50V		
C23	Cer,(CK924F1H104Z)	0.1μF,+80/-20%,50V		
C24	Cer,(CK924F1H104Z)	0.1μF,+80/-20%,50V		
C25	Cer,(CK924F1H104Z)	0.1μF,+80/-20%,50V		
C26	Cer,(CK924F1H104Z)	0.1μF,+80/-20%,50V		
C27	Cer,(CK924F1H104Z)	0.1μF,+80/-20%,50V		
J 1	Connector,(HIF3-20P-2.54DS)	20P		
J 2	Connector,(FCN364J032)	32P		
J 3	Connector,(DF1-5P-2.5DSA)	5P		
L 1	Coil,(LF8-101K)	100μH		
Q 1	IC,(74ALS574N)			
Q 2	IC,(74LS540)			
Q 3	IC,(74LS74A)			
Q 4	Not assigned			
Q 5	IC,(μPD8748D)			

( ): Manufacturer's part number
* : Selected at factory

44W85804 | 1/3

Parts List : R-Z12(Z1) PRINTER INTERFACE 41

CKT REF	DESCRIPTION	RATING		NOTE
Q 6	IC,(MBM2732A-25)			
Q 7	IC,(74LS541)			
Q 8	IC,(μPD8243C)			
Q 9	IC,(SN74ALS574N)			
Q10	IC,(M54563P)			
Q11	IC,(M54563P)			
Q12	IC,(μPC277C)			
Q13	IC,(AM25LS2537PC)			
Q14	Tr,(2SC1907)			
Q15	Tr,(2SD571)			
Q16	Tr,(2SB605)			
Q17	Tr,(2SD571)			
Q18	Tr,(2SB605)			
Q19	Tr,(2SC1907)			
Q20	Di,(1S953)			
Q21	Di,breakdown,(RD13E)	12.11 to 13.66V,400mW		
Q22	IC,(TL7705CP-B)			
Q23	Tr,(2SD833)			
Q24	Tr,(2SD833)			
Q25	Tr,(2SD833)			
Q26	Tr,(2SD833)			
Q27	Tr,(2SD833)			
Q28	Tr,(2SD833)			
Q29	Tr,(2SD833)			
Q30	Tr,(2SD833)			
Q31	Tr,(2SD833)			
Q32	Tr,(2SD833)			
Q33	Not assigned			
Q34	Di,(μPA54H)			
Q35	Di,(μPA54H)			
Q36	Di,(1S953)			
Q37	Di,(1S953)			
Q38	Di,(1S953)			
Q39	Di,(1S953)			
Q40	Di,breakdown,(RD6.2EB)	5.78 to 6.44V,400mW		
R 1	CF,(ARD25T103J)	10kΩ,±5%,1/4W		
R 2	CF,(ARD25T103J)	10kΩ,±5%,1/4W		
R 3	CF,(ARD25T103J)	10kΩ,±5%,1/4W		
R 4	CF,(ARD25T102J)	1kΩ,±5%,1/4W		
R 5	CF,(ARD25T102J)	1kΩ,±5%,1/4W		
R 6	Not assigned			
R 7	Not assigned			

( ): Manufacturer's part number
* : Selected at factory

44W85804 | 2/3

Parts List : R-Z12(Z1) PRINTER INTERFACE 41

CKT REF	DESCRIPTION	RATING		NOTE
R 8	CF,(ARD25T472J)	4.7kΩ,±5%,1/4W		
R 9	CF,(ARD25T472J)	4.7kΩ,±5%,1/4W		
R10	CF,(ARD25T223J)	22kΩ,±5%,1/4W		
R11	CF,(ARD25T181J)	180Ω,±5%,1/4W		
R12	CF,(ARD25T181J)	180Ω,±5%,1/4W		
R13	CF,(ARD25T183J)	18kΩ,±5%,1/4W		
R14	CF,(ARD25T472J)	4.7kΩ,±5%,1/4W		
R15	CF,(ARD25T123J)	12kΩ,±5%,1/4W		
R16	CF,(ARD25T223J)	22kΩ,±5%,1/4W		
R17	CF,(ARD25T511J)	510Ω,±5%,1/4W		
R18	CF,(ARD25T111J)	110Ω,±5%,1/4W		
R19	CF,(ARD25T223J)	22kΩ,±5%,1/4W		
R20	CF,(ARD25T221J)	220Ω,±5%,1/4W		
R21	CF,(ARD25T103J)	10kΩ,±5%,1/4W		
R22	CF,(ARD25T103J)	10kΩ,±5%,1/4W		
R23	CF,(ARD25T103J)	10kΩ,±5%,1/4W		
R24	CF,(ARD25T123J)	12kΩ,±5%,1/4W		
R25	CF,(ARD25T223J)	22kΩ,±5%,1/4W		
R26	CF,(ARD25T511J)	510Ω,±5%,1/4W		
R27	CF,(ARD25T111J)	110Ω,±5%,1/4W		
R28	CF,(ARD25T122J)	1.2kΩ,±5%,1/4W		
R29	CF,(ARD25T102J)	1kΩ,±5%,1/4W		
R30	Not assigned			
R31	CF,(ARD25T222J)	2.2kΩ,±5%,1/4W		
R32	CF,(ARD25T222J)	2.2kΩ,±5%,1/4W		
R33	CF,(ARD25T222J)	2.2kΩ,±5%,1/4W		
R34	CF,(ARD25T222J)	2.2kΩ,±5%,1/4W		
R35	CF,(ARD25T222J)	2.2kΩ,±5%,1/4W		
R36	CF,(ARD25T222J)	2.2kΩ,±5%,1/4W		
R37	CF,(ARD25T222J)	2.2kΩ,±5%,1/4W		
R38	CF,(ARD25T222J)	2.2kΩ,±5%,1/4W		
R39	CF,(ARD25T222J)	2.2kΩ,±5%,1/4W		
R40	CF,(ARD25T222J)	2.2kΩ,±5%,1/4W		
R41	CF,(ARD25T103J)	10kΩ,±5%,1/4W		
R42	CF,(ARD25T104J)	100kΩ,±5%,1/4W		
R43	CF,(ARD25T103J)	10kΩ,±5%,1/4W		
R44	MF,(RN14K2E1501D)	1.50kΩ,±0.5%,1/4W		
X 1	XTAL OSC,(TQC-208B)	6MHz		

( ): Manufacturer's part number
* : Selected at factory

44W85804 3/3

Parts List : R-Z12(Z2) PRINTER CONTROL 42

CKT REF	DESCRIPTION	RATING		NOTE
J 1	Connector, (DF1-5P-2.5DSA)			
Q 1	LED,(TLG226)			
S 1	Switch,(HL20-NS)			
S 2	Switch,(HL20-NS)			

( ): Manufacturer's part number
* : Selected at factory

44W85805 1/1

Parts List : T-Z13, R-Z13 GP-IB 28

CKT REF	DESCRIPTION	RATING		NOTE
C 1	Elect,(CE02C1A470)	47μF,±20%,10V		
C 2	Cer,(CK924F1H104Z)	0.1μF,+80/-20%,50V		
C 3	Cer,(CK924F1H104Z)	0.1μF,+80/-20%,50V		
C 4	Cer,(CK924F1H104Z)	0.1μF,+80/-20%,50V		
C 5	Cer,(CK924F1H104Z)	0.1μF,+80/-20%,50V		
C 6	Cer,(CK924F1H104Z)	0.1μF,+80/-20%,50V		
C 7	Cer,(CK924F1H104Z)	0.1μF,+80/-20%,50V		
C 8	Cer,(CK924F1H104Z)	0.1μF,+80/-20%,50V		
J 1	Pattern			
J 2	Connector, (57LE-20240-27CO-D35H)			
Q 1	IC,(75160A)			
Q 2	IC,(75162A)			
Q 3	IC,(μPD7210C)			
Q 4	IC,(74LS00)			
Q 5	IC,(74LS367A)			
Q 6	IC,(74LS240)			
Q 7	IC,(74LS74A)			
Q 8	IC,(74LS32)			
Q 9	IC,(74LS139)			
R 1	Single in-line array, (IHR-8-103JA)	10kΩ x 8,1/8W		
S 1	Dip,(BP-8)			

( ): Manufacturer's part number
* : Selected at factory

44W83046 1/1

Parts List : T-Z14 (Option 10), R-Z14 (Option 11) RS-232C 29

CKT REF	DESCRIPTION	RATING		NOTE
C 1	Elect,(CE02C1A470)	47μF,±20%,10V		
C 2	Elect,(CE02C1C330)	33μF,±20%,16V		
C 3	Elect,(CE02C1C330)	33μF,±20%,16V		
C 4	Cer,(CC924CH1H151J)	150pF,±5%,50V		
C 5	Cer,(CK924F1H104Z)	0.1μF,+80/-20%,50V		
C 6	Cer,(CK924F1H104Z)	0.1μF,+80/-20%,50V		
C 7	Cer,(CK924F1H104Z)	0.1μF,+80/-20%,50V		
C 8	Cer,(CK924F1H104Z)	0.1μF,+80/-20%,50V		
C 9	Cer,(CK924F1H104Z)	0.1μF,+80/-20%,50V		
C10	Cer,(CK924F1H104Z)	0.1μF,+80/-20%,50V		
C11	Cer,(CK924F1H104Z)	0.1μF,+80/-20%,50V		
C12	Cer,(CK924F1H104Z)	0.1μF,+80/-20%,50V		
C13	Cer,(CK924F1H104Z)	0.1μF,+80/-20%,50V		
J 1	Pattern			
J 2	Connector, (DB-25SA-J4)			
Q 1	IC,(SN75189AN)			
Q 2	IC,(74LS240)			
Q 3	IC,(SN75188N)			
Q 4	IC,(μPD8251AFC)			
Q 5	IC,(74LS04)			
Q 6	IC,(74LS367A)			
Q 7	IC,(COM8146)			
Q 8	IC,(74LS139)			
R 1	Single in-line array, (IHR-8-103JA)	10kΩ x 8,1/8W		
R 2	Single in-line array, (IHR-4-103JA)	10kΩ x 4,1/8W		
S 1	Dip,(S-2031)			
S 2	Dip,(B-8A)			
X 1	XTAL OSC,(NX-5068)	5.0688MHz		

( ): Manufacturer's part number
* : Selected at factory

44W83047 1/1